(12) STANDARD PATENT (11) Application No. **AU 2008342802 B2**
(19) AUSTRALIAN PATENT OFFICE

(54) Title
Packaging for tobacco industry products

(51) International Patent Classification(s)
B65B 33/00 (2006.01) ***B65D 85/10*** (2006.01)
B65D 81/20 (2006.01)

(21) Application No: **2008342802** (22) Date of Filing: **2008.11.26**

(87) WIPO No: **WO09/083344**

(30) Priority Data

(31) Number	(32) Date	(33) Country
2007-335780	**2007.12.27**	**JP**

(43) Publication Date: **2009.07.09**
(44) Accepted Journal Date: **2014.04.17**

(71) Applicant(s)
British American Tobacco Japan, Ltd

(72) Inventor(s)
Potter, Dennis Lee;Blick, Kevin

(74) Agent / Attorney
Shelston IP, L 21 60 Margaret St, Sydney, NSW, 2000

(56) Related Art
EP 1637469
US 2646837
US 3705590

(12) INTERNATIONAL APPLICATION PUBLISHED UNDER THE PATENT COOPERATION TREATY (PCT)

(19) World Intellectual Property Organization
International Bureau

(43) International Publication Date
9 July 2009 (09.07.2009)

PCT

(10) International Publication Number
WO 2009/083344 A3

(51) International Patent Classification:
B65D 85/10 (2006.01) *B65B 33/00* (2006.01)
B65D 81/20 (2006.01)

(21) International Application Number:
PCT/EP2008/066246

(22) International Filing Date:
26 November 2008 (26.11.2008)

(25) Filing Language: English

(26) Publication Language: English

(30) Priority Data:
2007-335780 27 December 2007 (27.12.2007) JP

(71) Applicants *(for all designated States except US)*: **BRITISH AMERICAN TOBACCO JAPAN, LTD** [JP/JP]; Atago Mori Tower, 2-5-1 Atago, Minato-ku, Tokyo 105-6222 (JP). **BLICK, Kevin** [GB/JP]; Atago Mori Tower 22F, 2-5-1 Atago, Minato-ku, Tokyo 105-6222 (JP).

(72) Inventor; and
(75) Inventor/Applicant *(for US only)*: **POTTER, Dennis, Lee** [US/JP]; Windsor Chojamaru No. 103, 2-1-4 Kami Osaki, Shinagawa-ku, Tokyo 141-0021 (JP).

(74) Agents: **READ, Matthew** et al.; 20 Little Britain, London EC1A 7DH (GB).

(81) Designated States *(unless otherwise indicated, for every kind of national protection available)*: AE, AG, AL, AM, AO, AT, AU, AZ, BA, BB, BG, BH, BR, BW, BY, BZ, CA, CH, CN, CO, CR, CU, CZ, DE, DK, DM, DO, DZ, EC, EE, EG, ES, FI, GB, GD, GE, GH, GM, GT, HN, HR, HU, ID, IL, IN, IS, JP, KE, KG, KM, KN, KP, KR, KZ, LA, LC, LK, LR, LS, LT, LU, LY, MA, MD, ME, MG, MK, MN, MW, MX, MY, MZ, NA, NG, NI, NO, NZ, OM, PG, PH, PL, PT, RO, RS, RU, SC, SD, SE, SG, SK, SL, SM, ST, SV, SY, TJ, TM, TN, TR, TT, TZ, UA, UG, US, UZ, VC, VN, ZA, ZM, ZW.

(84) Designated States *(unless otherwise indicated, for every kind of regional protection available)*: ARIPO (BW, GH, GM, KE, LS, MW, MZ, NA, SD, SL, SZ, TZ, UG, ZM, ZW), Eurasian (AM, AZ, BY, KG, KZ, MD, RU, TJ, TM), European (AT, BE, BG, CH, CY, CZ, DE, DK, EE, ES, FI, FR, GB, GR, HR, HU, IE, IS, IT, LT, LU, LV, MC, MT, NL, NO, PL, PT, RO, SE, SI, SK, TR), OAPI (BF, BJ, CF, CG, CI, CM, GA, GN, GQ, GW, ML, MR, NE, SN, TD, TG).

Published:

— *with international search report (Art. 21(3))*

[Continued on next page]

(54) **Title**: PACKAGING FOR TOBACCO INDUSTRY PRODUCTS

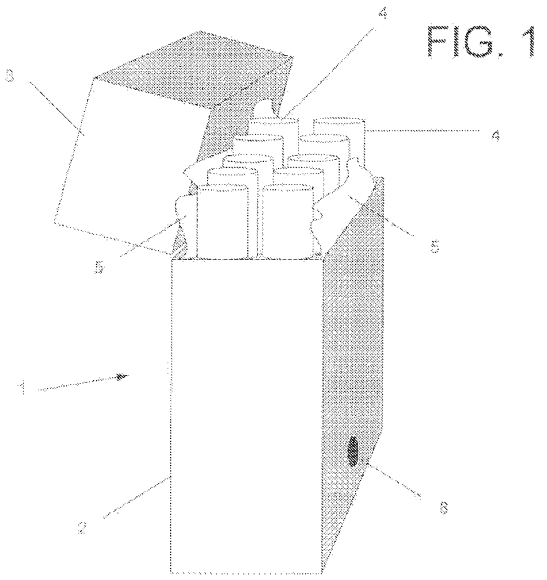

FIG. 1

(57) **Abstract**: Packaging for tobacco industry products such as cigarettes comprises a closed container (1) having a main body (2) and a flip top (3), coated with a continuous layer of transparent plastics material (6) to provide an air-tight seal. The container (1) can be pressurised with e.g. nitrogen gas through a one-way valve (8). The package can be biodegradable, with the container (1), its interior wrapping (5) and outer coating (6) all being made of biodegradable material.

WO 2009/083344 A3

— *before the expiration of the time limit for amending the claims and to be republished in the event of receipt of amendments (Rule 48.2(h))*

(88) Date of publication of the international search report:
24 September 2009

2008342802 16 Jan 2014

Packaging for tobacco industry products

Description

[0001] This invention relates to packaging tobacco industry products, for example smokeable tobacco products such as cigarettes.

[0002] Any discussion of the prior art throughout the specification should in no way be considered as an admission that such prior art is widely known or forms part of common general knowledge in the field.

[0003] Conventional cigarette box packaging consists of a bundle of cigarettes wrapped in a paper/metal foil laminate sheet, received in a container typically formed of carton board. The container usually has a hinged lid to provide access to the cigarette bundle. The container is often formed from a pre-printed blank of SBS board stock which is folded and wrapped around the cigarette bundle. The container is wrapped in a heat sealable clear film, most commonly polypropylene with an embedded tear tape to assist in easy opening.

[0004] Of these packaging components, only the outermost film contributes in a significant manner to the shelf life stability of the packaged cigarettes. The plastics film acts as a moisture barrier but its effectiveness is highly dependent upon obtaining adequate seals in the folded, overlapped areas of the film wrap. Nevertheless, the low moisture barrier transmission rate through the plastics film helps maintain the starting moisture and other volatile components of the cigarettes as manufactured, when the packaged cigarettes are exposed to environments that have either a higher or lower relative humidity than the internal humidity of the cigarette pack. Whilst polypropylene film has commonly been employed as the outer wrapping, other film materials have been used which offer reduced moisture transmission rates, for example vacuum metallised plastics films but these materials are still highly dependent upon achieving a proper seal of the folded, overlapped areas of the film when wrapped around the container.

[0005] Alternative packages have been proposed to replace the interior wrapping or the SBS board with materials and structures that provide the requisite moisture barrier properties, thereby eliminating the need for an exterior film of plastics material as an over-wrap. Examples include rigid, injection moulded plastic packs with integral seals. However, these approaches are not suitable for use with conventional, carton board containers produced in high volume by mass production techniques.

2008342802 16 Jan 2014

[0006] Reference is made to US 3,301,468; US 3,125,213, US 3,533,550, WO97/42098, EP1637469 and US 5,165,535.

[0007] According to a first aspect of the invention, the invention there is provided a package comprising: a closed container that contains tobacco industry products, wherein the container comprises a main body and a lid that can be opened to provide access to the tobacco industry products; a coating of plastics material that has been applied to the container in a layer that provides an airtight seal between the interior and exterior of the container and a seal between the main body and the lid; a line of weakness in the layer of plastics material to facilitate opening of the lid; and a valve to establish a pressure differential between the interior and exterior of the container, wherein the valve comprises a one way valve that has been push-fitted into an aperture in a wall of the container to permit establishment of the pressure differential between the interior and exterior of the container.

[0008] Unless the context clearly requires otherwise, throughout the description and the claims, the words "comprise", "comprising", and the like are to be construed in an inclusive sense as opposed to an exclusive or exhaustive sense; that is to say, in the sense of "including, but not limited to".

[0009] By applying the plastics material as a coating, a continuous layer can be provided over the entire exterior of the container avoiding the need to provide sealed joints, and thereby providing an improved seal between the interior and exterior of the container.

[0010] A valve may be provided to allow a pressure differential to be established between the interior and exterior of the container. The pressure differential may comprise an increased pressure within the container, created for example with an inert gas such as nitrogen.

[0011] An interior wrapping may be provided between the container and the tobacco products, which can be bio-degradable.

[0012] The container may be fabricated of air-permeable material such as carton board, for example SBS, and the plastics layer may extend over the entire exterior surface of the container to provide the airtight seal. The plastics layer may comprise a polymer for example polypropylene or polyethylene, and may include an additive to facilitate decomposition of the plastics material and/or an additive to enhance the airtight seal provided by the plastics material.

2008342802 16 Jan 2014

[0013] The container may have a main body and a lid that can be opened to provide access the tobacco products, the layer of plastics material providing a seal between the main body and the lid.

[0014] A line of weakness may be provided in the layer of plastics material to facilitate opening of the lid, in the form of a tear strip or a line of reduced thickness in the plastics layer.

[0015] According to a second aspect of the invention, the invention there is provided a method of packaging tobacco industry products, comprising applying a coating of plastics material to a container containing the tobacco products, to render the container airtight, wherein the container comprises a main body and a lid that can be opened to provide access to the tobacco industry products and the layer of plastics material provides a seal between the main body and the lid; providing a line of weakness in the layer of plastics material to allow opening of the lid; push-fitting a one way valve into an aperture in a wall of the container; and establishing a pressure differential between the interior and exterior of the container through the one way valve.

[0016] According to a third aspect of the invention, the invention there is provided an apparatus for packaging tobacco industry products, the apparatus including a packaging device operable to pack tobacco products into a container, wherein the container comprises a main body and a lid that can be opened to provide access to the tobacco industry products; a coating device to coat the container with a plastics material in a layer that provides an airtight seal and provides a seal between the main body and the lid; a device for forming a line of weakness in the plastics layer on the container to facilitate opening of the lid; and a device for push-fitting a one way valve into an aperture in a wall of the container for establishing a pressure differential between the interior and exterior thereof.

[0017] In a further aspect the invention provides a package comprising a container, and tobacco products within a flexible hermetically sealed bag, within the container.

[0018] A valve may be provided in the bag to allow a pressure differential to be established between the interior and exterior of the bag. Means for rupturing the hermetically sealed bag may be provided to allow access to the tobacco industry products.

[0019] In order that the invention may be more fully understood embodiments thereof will now be described by way of illustrative example with reference to the accompanying drawings,

2008342802 16 Jan 2014

in which:

Figure 1 is a perspective view of a pack of cigarettes with its lid open;

Figure 2 is a perspective view corresponding to Figure 1 with the lid shut;

Figure 3 is a sectional view of a pack shown in Figures 1 and 2;

Figure 4 is a schematic illustration of apparatus for packaging cigarettes;

Figures 5A-5C are schematic illustrations of the progress of a container through an alternative form of coating station that utilises a curtain of coating material;

Figure 6 is a schematic part sectional view of another embodiment of coating station that utilises a heated tunnel of air; and

Figure 7 is a schematic sectional view of an alternative embodiment of cigarette pack in accordance with the invention.

Figures 1 to 3 illustrate a pack of cigarettes in accordance with the invention that comprises a container 1 in the form of a rectangular main body 2 with a hinged, flip-top lid 3 that contains two parallel rows of filter cigarettes 4 contained with an inner wrapping 5.

The container 1 may be made from carton board such as SBS by folding from a pre-printed blank in a manner known *per se*. The inner wrapping 5 may be formed of paper and need not include a metal foil laminate, and so is bio-degradable.

As shown clearly in Figure 3, the outer surface of the container 1 is coated with a plastics material to provide a continuous coating 6 which provides an airtight seal. As illustrated in Figure 2, a tear strip 7 is configured around the join between the main body 2 and the lid 3, so as to allow the user to remove the strip 7 and thereby break the continuity of the coating 6 and permit the lid 3 to be opened. The tear strip 7 may be applied to the container prior to the application of the coating 6 or subsequently. The tear strip 7 thus provides a line of weakness to enable opening of the lid. The line of weakness can be created in alternative ways and for example, the plastics coating 6 may be scored or otherwise thinned without rupturing along the perimeter of the lid 3 to permit opening of the lid.

A one-way valve 8 is fitted into a wall of the container 1. The valve allows the pressure differential to be established between the interior and exterior of the container. Conveniently, the valve can permit an over-pressure to be created within the container, which does not dissipate significantly over time due to the provision of the airtight, sealed coating 6 on the exterior of the container. The valve 8 comprises a unit which can be push-fitted into a small aperture in a side wall of the container either before or after application of the coating 6. If applied after application of the coating 6, the valve 8 may bond with the coating 6 as it hardens. In the example shown in Figure 3, the valve 8 includes a main body 9 with a central passageway 10 that contains a one-way integral flap valve 11 so that gas can be pumped into the container to provide the over-pressure. The level of overpressure will depend upon the structural integrity of the coated container 1. The application

of over-pressure provides both functional and user benefits. The overpressure improves the shelf life potential of the cigarettes by reducing internal vapour pressures of the water and other volatile components thereby reducing the potential for spotting and staining of the cigarettes 4 as compared with a corresponding hermetically sealed container at atmospheric pressure. Also, for the user, the overpressure rigidifies the container 1, which provides the pack with a distinctive touch and feel. When opened, the escaping gas is audible to the user, confirming the freshness of the cigarettes, and has an aroma which provides a cue as to the freshness of the tobacco product.

The coating 6 applied to the container 1 may be a polymer such as polypropylene or polyethylene with desired physical and barrier properties. The coating is selected such that it readily adheres to the surface of the container 1 and preferably solidifies so as to be substantially transparent in order that printed surfaces of the container 1 remain visible through the coating. The plastics coating 6 may be selected to give a particular tactile feel or visual impression on the exterior surface. Depending on the plastics material selected, it may be desirable to use clear lacquered or varnished ink coating to aid in bonding the plastic coating 6 to printed areas of the container 1.

The plastics material may incorporate an additive material for causing the plastics coating 6 to decompose easily in a compost or landfill environment. In this way, the interior wrapping 5, which need not include metallic foil, along with the container 1 and the plastics coating 6 are all biodegradable and may be certifiable as a degradable or biodegradable structure. The additive material of a used decomposition may be selected from products offered by EPI Environment Plastics Inc (Vancouver, BC) or other similar available products.

The plastics coating 6 may also include an additive material for improving the air barrier properties of the coating without interfering with its optical transparency. One such material is Nanolock™ marketed (by InMat Inc., Hillsboro, New Jersey, USA). This additive greatly improves the shelf stability of the resulting package to a

near hermetic level so as to improve the shelf life and freshness of the tobacco product for the user.

Figure 4 illustrates an apparatus for packaging tobacco products to provide packs as illustrated in Figures 1-3. A packaging machine 12 in a generally conventional manner, wraps bundles of cigarettes with the interior wrapping 5 and then with a pre-printed blank of SPS material to form the container 1. Successive packs of cigarettes with containers 1 fabricated by the machine 13 are fed along a conveyer 13 in direction 14 to station 15 at which the tear strip 7 is applied to the container 1 at the join between the lid 3 and main body 2. The containers 1 then move from the tear strip fitting station 15 to coating station 16 at which liquid or molten plastics polymer material containing the aforementioned additives is pumped from a reservoir 17 through spray heads 18 to spray coat each container 1 completely and thereby provide the continuous, sealed coating 6 shown in Figure 3. The coated containers are moved from the coating station 16 to a valve-fitting station 19 at which the valve 8 is press-fitted into the container. The packs then move to a gas supply station 20 at which gas is pumped through the one-way valve 9 so as to pressure the container 1. The gas may comprise filtered air or an inert gas such as nitrogen. In an alternative arrangement the gas supply is replaced by a vacuum pump and the containers are evacuated of air.

Thereafter, the pressurised containers 1 may be passed from the conveyor 13 to a packing station (not shown) to be packed into larger containers for transport. In order to improve the seal provided by the one-way valve 8, the exterior of the valve, which may be formed in plastics material, may be heated in order to partially melt the plastics material and close the central opening 10.

An alternative embodiment of the coating station 16 is shown in Figure 5 in which the container 1 is passed through a curtain 21 of liquid coating material. The curtain 21 is emitted by a line of nozzles 22 and falls into a reservoir 23 to be pumped back to the nozzles 22 by a pump, not shown. The conveyor 13 is configured in two parts 13a, 13b with the curtain 21 of liquid falling between them. Figure 5A illustrates an uncoated container 1 approaching the coating station 16 and the curtain 21 of liquid

coating material. The container 1 is driven in to the curtain 21 by the conveyor part 13a so as to be coated with the coating material from the curtain 21 on all sides, including the underside, as illustrated in Figure 5B. The container 1 with a coating 6 of material from the curtain 21 then moves onto the conveyor part 13b and Figure 5C shows the fully coated container 1 moving toward the valve fitting station 19 shown in Figure 4.

Figure 6 illustrates an alternative way of creating the coating 6 on the container 1, in which container 1 on conveyor part 13a, is loosely pre-wrapped with a sheet of plastics material 24 in a non-sealed manner and then dropped into a tunnel 25 that is fed with an upward flow of heated air by a blower 26. A succession of containers 1 each wrapped with a sheet 24 are fed into the upper opening 25a of the tunnel and fall through the heated air onto conveyor part 13b to the tunnel opening 25b, to be fed to the valve fitting station 19 shown in Figure 4. The containers 1 free-fall under the effect of gravity through the heated air from the blower 26 and the wrapping 24 melts to form the sealed, airtight coating 6. The vertical arrangement of the tunnel 25 has the advantage that the containers 1 are unsupported by the conveyor 13 during the melting process, which facilitates formation of a continuous airtight coating 6 over the entire container 1. However, the tunnel 25 could be arranged in other ways, for example horizontal, with the conveyor running through it.

Another embodiment of a cigarette pack in accordance with the invention is illustrated in Figure 7. In this embodiment, the container 1 is of a similar construction to that shown in Figures 1-3, with a main body 2 and lid 3. However, the cigarettes 4 are contained within a flexible, sealed bag 27 that may be pressurised. The interior wrapping 5 of the previous embodiment is omitted and no exterior coating of plastics material 6 is provided. The cigarettes are packaged by placing them initially in the plastics bag 27 through an opening at the top, which is then heat-sealed close so as to produce a welded rib 28 along the top of the bag as shown in Figure 5. The bag 27 is then pressurised through valve 8 which in this example, is disposed at the bottom of the bag. The bag 27 may be pressurised with an inert gas or filtered air in the manner previously described. The sealed, flexible

bag 27 may be made of a polymer such as polyethylene or polypropylene as previously described and may include the aforementioned additive to render it biodegradable. A line of weakness 29 may be formed along the top of the bag to assist the user in opening it to provide access to the cigarettes 4. Also a sharp spike 30 may be provided within the container to allow the user to press the pressurised bag onto the spike in order to puncture the bag and deflate it. This embodiment has the advantage that the cigarettes can be packaged in a conventional container 1 made of SBS board without the need for an exterior, plastics transparent wrapping or the interior wrapping 5, and with the advantage that the cigarettes are kept fresh and the overall package is biodegradable.

Many modifications and variation to the described embodiments will be evident to those skilled in the art. For example, the plastics material can be applied by methods other than those described, for example dipping. Also, whilst the described packages are for tobacco industry products in the form of cigarettes, they may also be used for other such products and as used herein the term "tobacco industry product" refers to any item made in, or sold by the tobacco industry, typically including a) cigarettes, cigarillos, cigars, tobacco for pipes or for roll-your-own cigarettes, (whether based on tobacco, tobacco derivatives, expanded tobacco, reconstituted tobacco or tobacco substitutes); b) non-smoking products incorporating tobacco, tobacco derivatives, expanded tobacco, reconstituted tobacco or tobacco substitutes such as snuff, snus, hard tobacco, and heat-not-burn products; and c) smoking cessation aids and other nicotine-delivery systems such as adhesive patches, inhalers, lozenges and gum. This list is not intended to be exclusive, but merely illustrates a range of products which are made and sold in the tobacco industry.

2008342802 16 Jan 2014

Claims

1. A package comprising:

a closed container that contains tobacco industry products, wherein the container comprises a main body and a lid that can be opened to provide access to the tobacco industry products;

a coating of plastics material that has been applied to the container in a layer that provides an airtight seal between the interior and exterior of the container and a seal between the main body and the lid;

a line of weakness in the layer of plastics material to facilitate opening of the lid; and

a valve to establish a pressure differential between the interior and exterior of the container, wherein the valve comprises a one way valve that has been push-fitted into an aperture in a wall of the container to permit establishment of the pressure differential between the interior and exterior of the container.

2. A package according to claim 1 wherein the coating of plastics material has been applied to the container in a liquid layer and has solidified; and the valve has been applied after application of the coating, and has bonded with the coating as it hardened.

3. A package according to claim 1 or 2 wherein the pressure differential comprises increased pressure within the container.

4. A package according to claim 1, 2 or 3 wherein the container contains an inert gas.

5. A package according to any preceding claim including an interior wrapping between the container and the tobacco products.

6. A package according to claim 4 wherein the interior wrapping is biodegradable.

7. A package according to any preceding claim including a tear strip or a line of reduced thickness in the plastics layer to provide the line of weakness.

8. A package according to any preceding claim wherein the plastics layer comprises at least one of:

a) a polymer, for example polypropylene or polyethylene;

b) an additive to facilitate decomposition of the plastics material;

c) an additive to enhance the airtight seal provided by the plastics material.

2008342802 16 Jan 2014

9. A method of packaging tobacco industry products, comprising

applying a coating of plastics material to a container containing the tobacco products, to render the container airtight, wherein the container comprises a main body and a lid that can be opened to provide access to the tobacco industry products and the layer of plastics material provides a seal between the main body and the lid;

providing a line of weakness in the layer of plastics material to allow opening of the lid;

push-fitting a one way valve into an aperture in a wall of the container; and establishing a pressure differential between the interior and exterior of the container through the one way valve.

10. A method according to claim 9 wherein the coating of plastics material is applied to the container in a liquid layer; and the valve is applied after application of the coating such that the valve bonds with the coating as it hardens.

11. A method according to claim 9 or 10, wherein the coating is applied by one of:

a) spray-coating the exterior of the container with the plastics material;

b) passing the container through a curtain of liquid coating material;

c) dipping the container in the plastics material to form the layer.

12. A method according to claim 9 or 10 wherein the coating is applied by wrapping the container with a sheet of meltable plastics material and melting the sheet to form the coating.

13. A method according to claim 12 including passing the container through a tunnel fed with heated air to melt the wrapping.

14. A method according to claim 13 including allowing the container to free-fall downwardly through the tunnel against an upward flow of the heated air.

15. A method according to any one of claims 9 to 14 including providing a tear strip on the container either before or after applying the plastics layer.

16. A method according to any one of claims 9 to 15 including pumping a gas into the container to create a positive pressure therein.

2008342802 16 Jan 2014

17. A method according to any one of claims 9 to 16 including providing

a) an additive in the plastics material to facilitate decomposition of the plastics material; and/or

b) an additive in the plastics material to enhance the airtight seal provided by the plastics material.

18. Apparatus for packaging tobacco industry products, the apparatus including

a packaging device operable to pack tobacco products into a container, wherein the container comprises a main body and a lid that can be opened to provide access to the tobacco industry products;

a coating device to coat the container with a plastics material in a layer that provides an airtight seal and provides a seal between the main body and the lid;

a device for forming a line of weakness in the plastics layer on the container to facilitate opening of the lid; and

a device for push-fitting a one way valve into an aperture in a wall of the container for establishing a pressure differential between the interior and exterior thereof.

19. Apparatus according to claim 18, wherein the coating device is configured to apply the coating of plastics material to the container in a liquid layer; and the device for push-fitting the one way valve is configured to fit the valve after application of the coating, such that the valve bonds with the coating as it hardens.

20. Apparatus according to claim 18 or 19 wherein the coating device comprises a spray coating device or the coating device is operable to create a curtain of liquid coating material through which the container passes.

21. Apparatus according to claim 18 or 19 wherein the coating device is operable to wrap the container with a sheet of meltable plastics material and melt the sheet to form the coating.

22. Apparatus according to claim 21 including a tunnel fed with heated air to melt the wrapping.

23. Apparatus according to claim 22 wherein the tunnel is disposed vertically so that the container free-falls downwardly through the tunnel against an upward flow of the heated air.

2008342802 16 Jan 2014

24. Apparatus according to any one of claims 18 to 23 including a gaseous supply source for pumping gas into the container through the valve or a vacuum pump for evacuating gas from the container through the valve.

25. Apparatus according to any one of claims 18 to 24 including a device for fitting a tear strip to the container.

26. A package substantially as herein described with reference to any one of the embodiments of the invention illustrated in the accompanying drawings and/or examples.

27. A method substantially as herein described with reference to any one of the embodiments of the invention illustrated in the accompanying drawings and/or examples.

28. An apparatus substantially as herein described with reference to any one of the embodiments of the invention illustrated in the accompanying drawings and/or examples.

FIG. 1

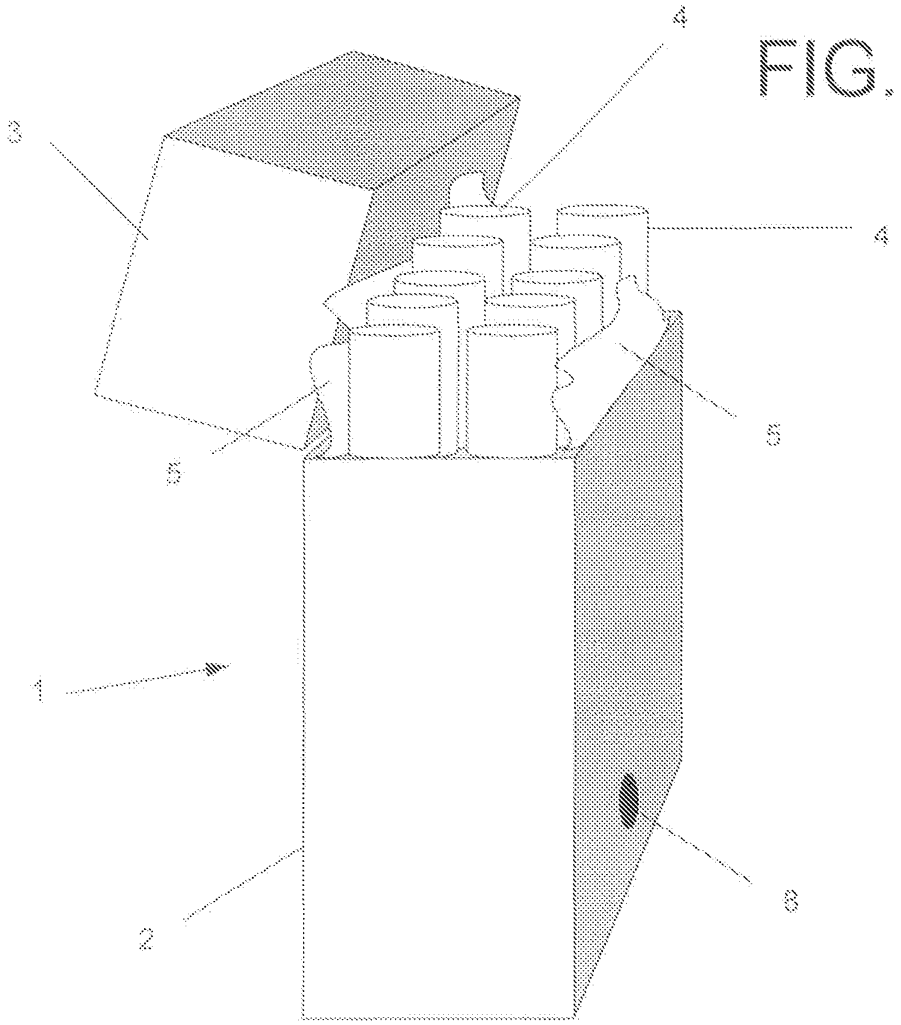

FIG. 2

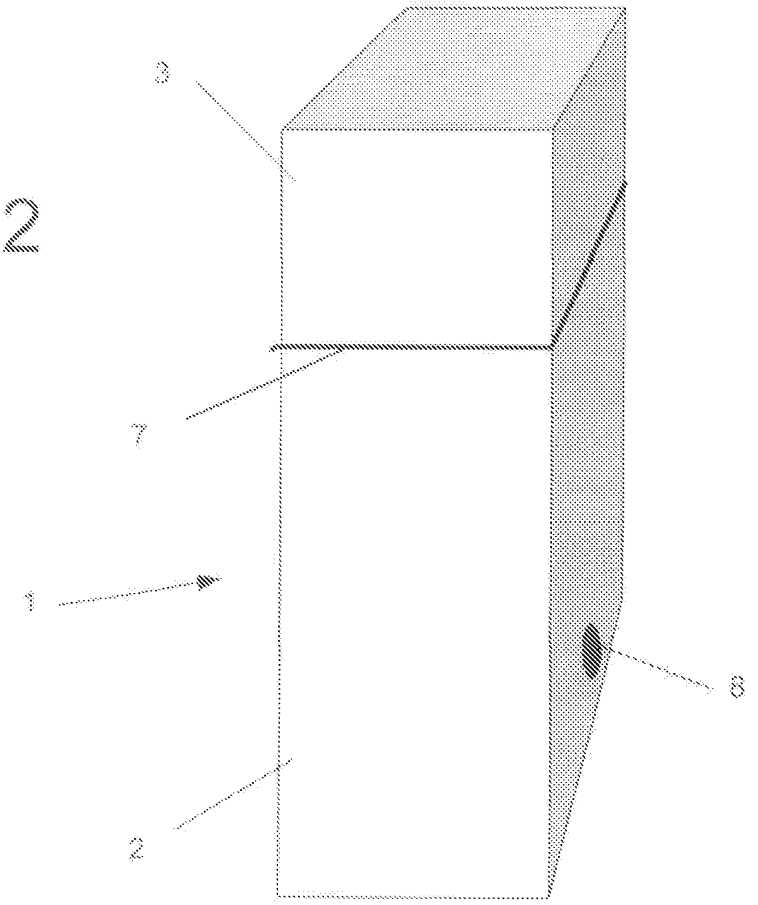

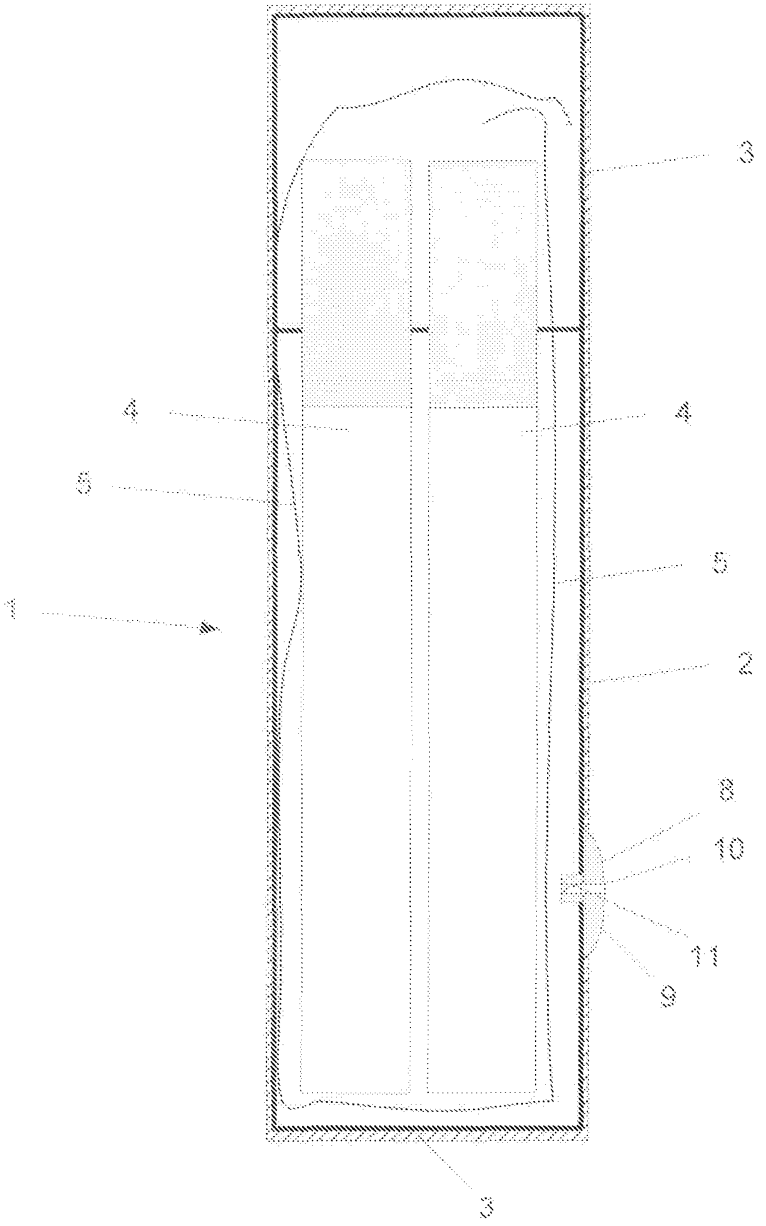

FIG. 3

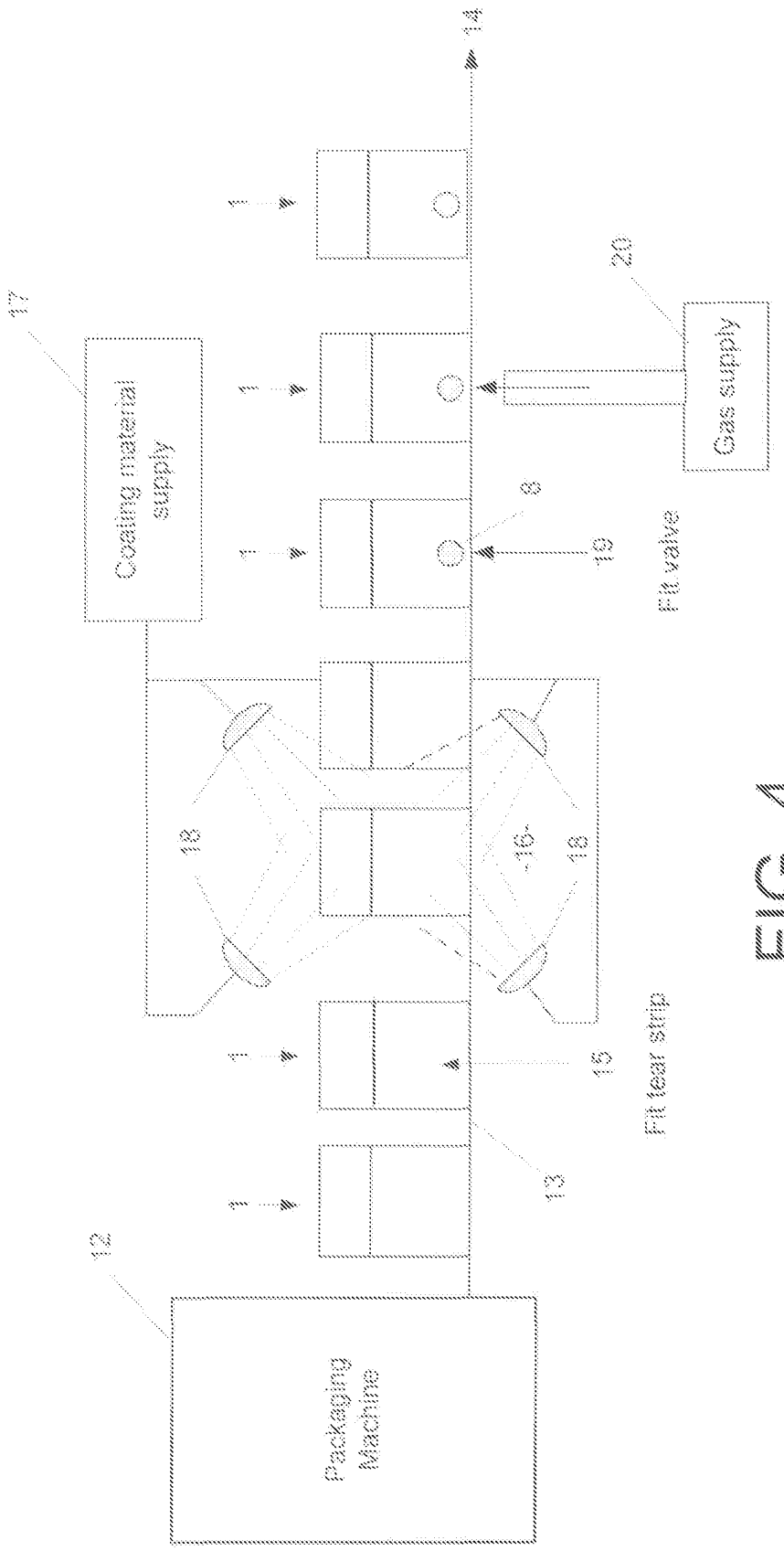
14
1
20
17
Coating material supply
Gas supply
8
19
Fit valve
18
16
15
Fit tear strip
13
12
Packaging Machine

FIG. 4

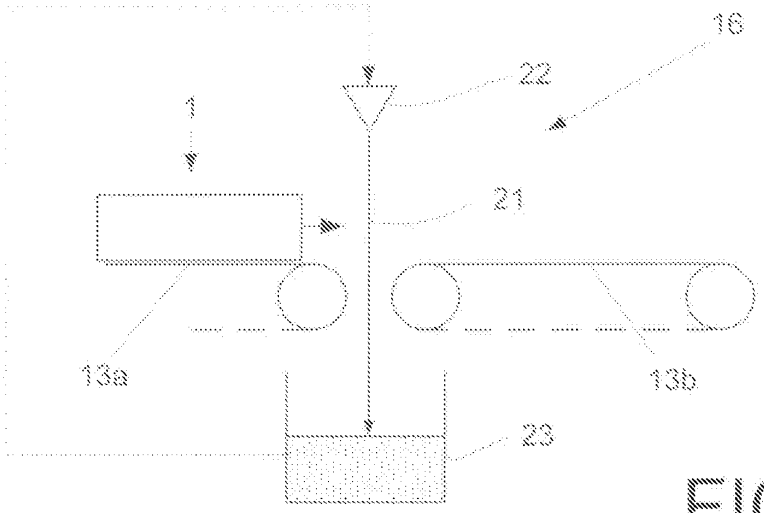

FIG. 5A

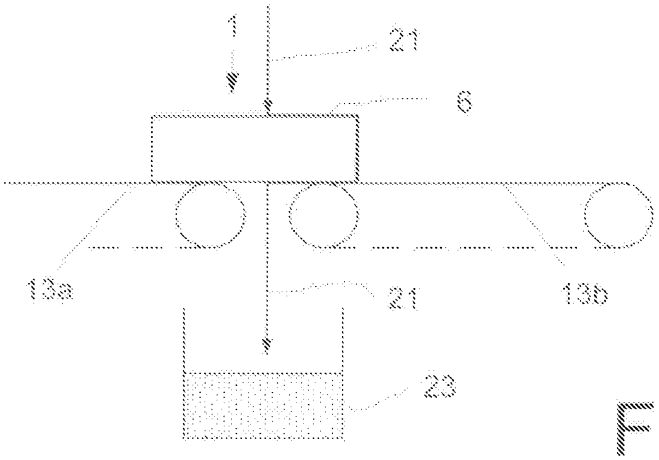

FIG. 5B

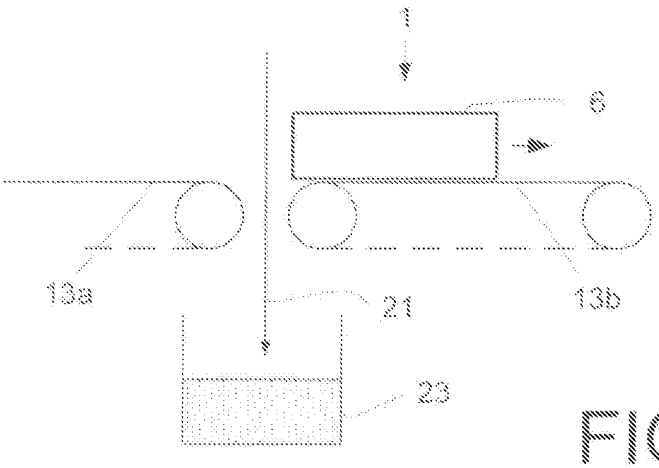

FIG. 5C

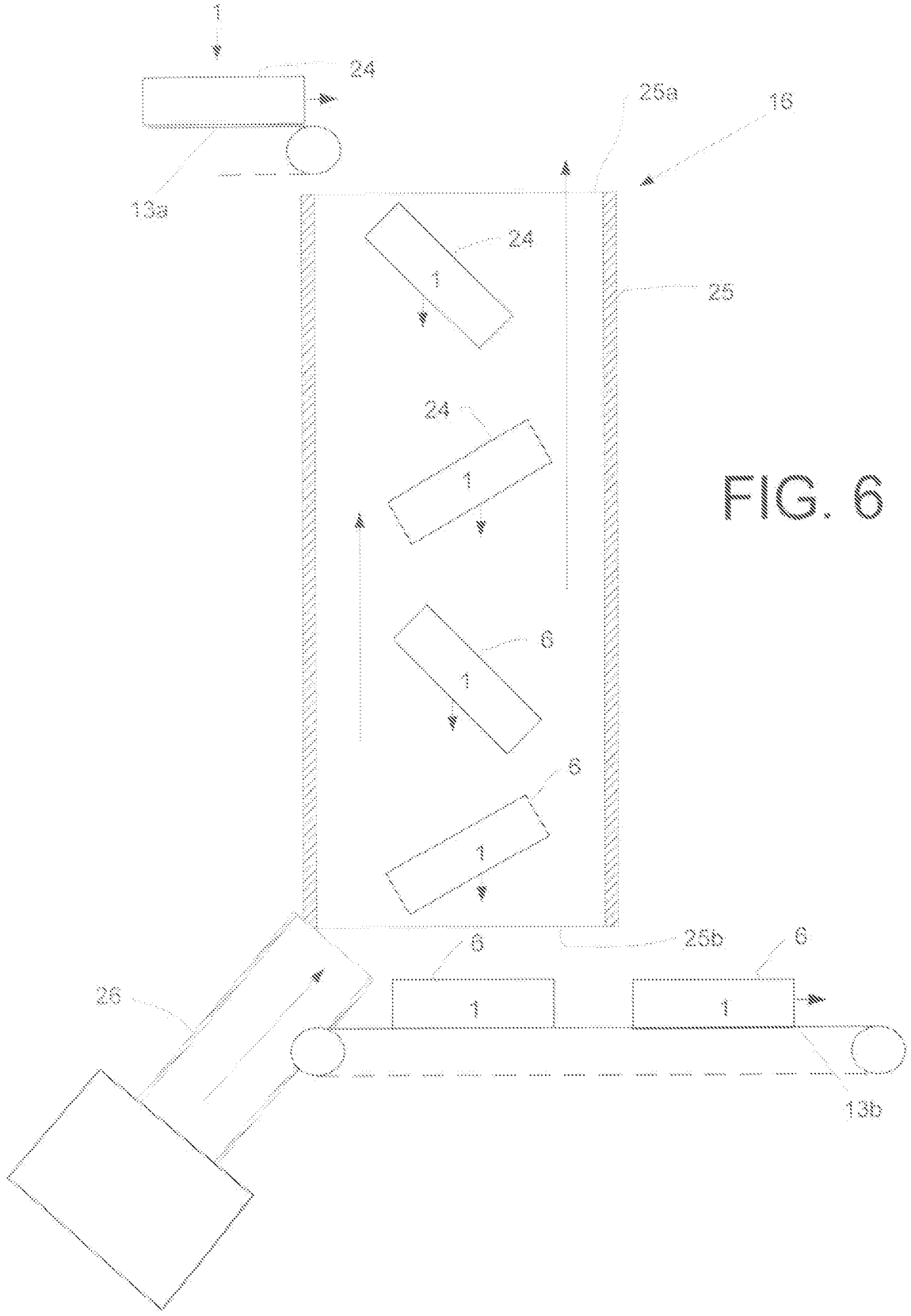

FIG. 6

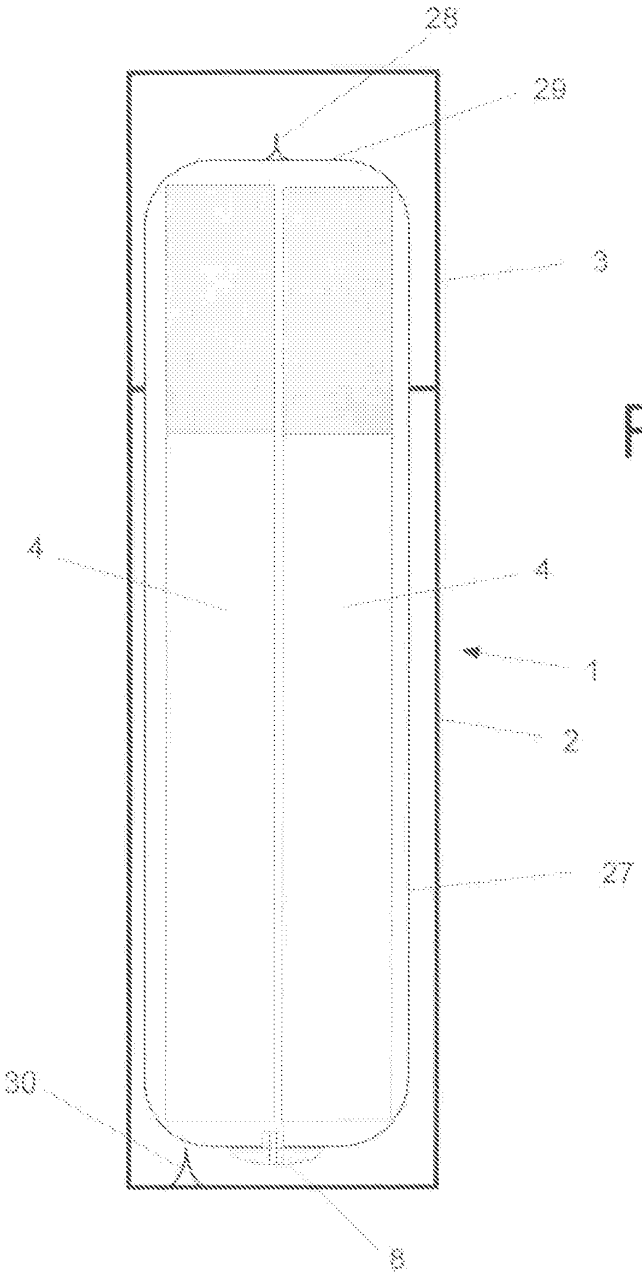

FIG. 7