Jan. 29, 1963 O. G. MOREHEAD 3,075,517

HEALTH BELT

Filed Oct. 15, 1962

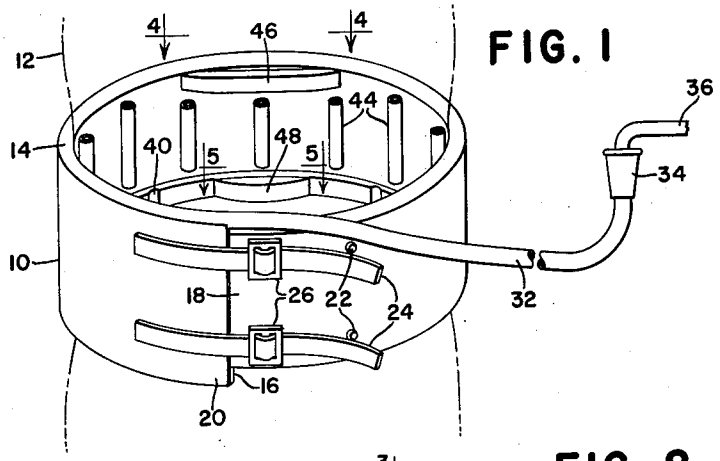

FIG. 1

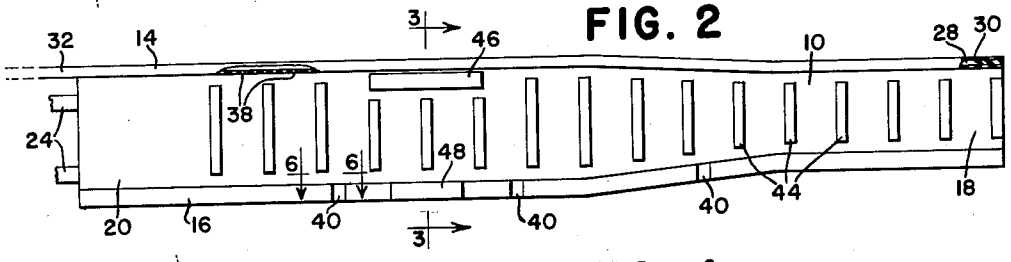

FIG. 2

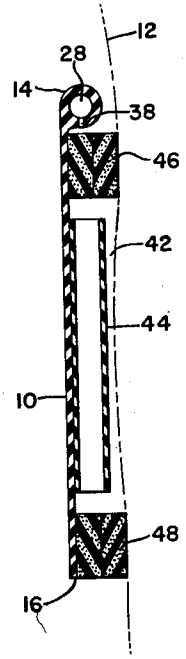

FIG. 3

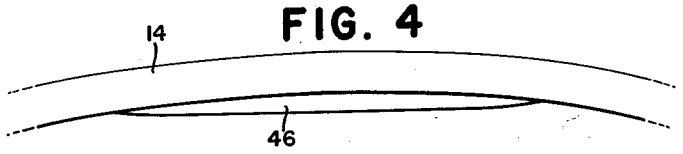

FIG. 4

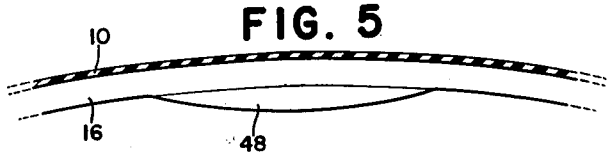

FIG. 5

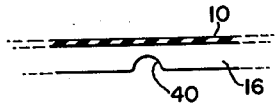

FIG. 6

INVENTOR.
O. G. MOREHEAD

BY

ATTORNEY

United States Patent Office 3,075,517 Patented Jan. 29, 1963

3,075,517
HEALTH BELT

Owen G. Morehead, 619 13th Ave. S., Clinton, Iowa

Filed Oct. 15, 1962, Ser. No. 230,404
6 Claims. (Cl. 128—24.1)

This invention relates to a health or reducing belt adapted to encircle the waist or trunk area of a person and receivable of heated liquid such as hot water which is controllable as to inlet and escape so as to produce a stimulating effect on the person's body whereby to rid the person ultimately of excess fat in the waist area as well as to strengthen and generally tone up the associated muscles and tissue.

It is a significant object of the invention to afford a simple inexpensive belt of this character so as to be capable of easy manufacture for sale at an acceptably low price. It is a further object to adapt the belt for attachment to an ordinary hot water tap which thus furnishes the heated liquid. A still further object is to provide such belt in a design that enables manufacture thereof in relatively few basic sizes, each belt in each size group being selectively adjustable in girth to accommodate a wide range of users. A nonetheless important object is to construct the belt of such character that it has a body of relatively thin flexible material bordered by relatively thicker upper and lower edges, the former of which is hollow or tubular and provided with apertures or orifices to allow the escape of heated liquid to the surface of the person's body encircled by the belt, combined with means on the lower edge for permitting controlled escape of the heated fluid.

The foregoing and other important objects and desirable features, inherent in and encompassed by the invention will become apparent to those versed in the art as a preferred embodiment of the invention is disclosed, by way of example in the ensuing description and accompanying sheet of drawings, the figures of which are described below.

FIGURE 1 is a perspective view illustrating the belt in use.

FIGURE 2 is an elevation of the belt fully opened.

FIGURE 3 is an enlarged section on the line 3—3 of FIGURE 2.

FIGURE 4 is an enlarged fragmentary view as seen on the line 4—4 of FIGURE 1.

FIGURE 5 is an enlarged section on the line 5—5 of FIGURE 1.

FIGURE 6 is an enlarged section on the line 6—6 of FIGURE 2.

The belt is made up of a main body or web 10 of relatively thin, strong, flexible material such as rubber or the like and, having reference to its normal position encircling the waist or trunk of a person, denoted by the broken lines 12 in FIGS. 1 and 3, the web is bordered at its top and bottom by relatively thicker upper and lower edges 14 and 16 respectively. The opposite terminal ends of the belt, as at 18 and 20, are equipped with cooperative releasable fastener means enabling securing of the belt in place about the person's waist. In this case the end 18 is narrower in vertical dimension than the end 20 and is thus receivable inwardly of and to be overlapped by the latter as part of the means whereby the belt is capable of adapting itself to waists of different sizes. A preferred form of fastener means will include a plurality of male snaps 22 on and spaced lengthwise of the belt at the end 18 and a pair of straps 24, of rubber or the like, on the end 20 and equipped with longitudinally adjustable female snaps 26. It will be seen that the end 18 is tapered in a limited area and

that other than that the general width of the belt is preferably uniform.

The upper edge 14 is hollow or tubular to afford a chamber 28 for receiving heated liquid, such as hot water at a temperature tolerable to the user, and one end of this tubular chamber is plugged at 30 in any suitable fashion and the other end has liquid inlet means, here in the form of a relatively long flexible tube 32 coupled at one end to the chamber in water-tight manner and provided at its other end with an adapter 34 adapted to fit over an ordinary hot water tap or faucet such as those provided in tubs, showers, sinks, etc., an example of which is shown here at 36. The chamber 28 may be molded integrally with the web or may be a separate tube of similar material bonded to the web 10.

The chamber 28 is offset inwardly from the inner or body-proximate surface of the web 10, as is the major portion of the lower edge 16, and has spaced apart lengthwise thereof a plurality of relatively small apertures or orifices 38 through which the heated liquid escapes slowly into the space afforded between the body of the user and the inner surface of the web because of the spacing function of the thicker offset edges 14 and 16.

For the purposes of comfort and the provision of a substantial seal between the belt and the user, the edge 16 is preferably of relatively softer pliable material, such as sponge rubber, whereby it more readily conforms to the contours of the user's body. Nevertheless, the inner parts of this edge have drain openings 40 therein, here three in number and spaced apart lengthwise of the belt. The number and spacing of these drains may be varied. Their function is to control the escape of heated liquid so that a substantial amount thereof remains within the belt-body chamber, as at 42, in order that the user will receive the benefits thereof. To further augment the belt-body chamber, the interior surface of the web has thereon a plurality of spacer elements, here vertical tubes 44, the tubular nature of which is dictated largely by the fact that they are thus more pliable and yieldable than solid rubber and cheaper than sponge rubber.

Because of the fact that the average person has a substantial concave configuration in his or her small-of-the-back area, it is expedient to provide the belt with upper and lower pads 46 and 48 to accommodate this area. These may be of sponge rubber or like material. As for material in general, it should have the characteristics of flexibility, durability, a certain amount of softness and be waterproof and water- and heat-resistant. Rubber meets these qualifications; although, other elastomers and many modern plastics do likewise.

A person using the belt may do so while taking a bath or shower or may use the belt apart from the bath or shower, simply fastening the belt in place and connecting the hose adapter 34 to the faucet as at 36. He will of course adjust the fastener means to hold the belt in place securely and without discomfort and will adjust the hot water flow as to rate and temperature within tolerable limits. The combinative effects of the encirclement by the belt, heat and vapor supplied by the water and incidental massage due to the water leaving the orifices 38 will prove highly beneficial, especially if accompanied by trunk bending, kneading of the treated area etc. The user soon learns to control the water as to temperature, rate etc. as well as to adjust the tightness of the belt about his mid-section.

Features and advantages other than those outlined above will occur to those versed in the art, as will modifications of the structure disclosed, all without departure from the spirit and scope of the invention.

What is claimed is:

1. A health belt adapted to encircle the waist area of a person and having opposite terminal ends and coop-

erative fastener means respectively on said ends for securing said belt in place on such person; said belt having a main web of elongated relatively thin flexible material bordered at its top and bottom respectively by relatively thicker upper and lower marginal edges offset inwardly from the general plane of the web to contact the body of such person and to space the web outwardly from the body; said upper edge being hollow lengthwise of the belt to receive liquid and having one end closed and its other end provided with liquid inlet means, said upper edge having a plurality of apertures therein inwardly of the web to enable the escape of liquid between the web and the body of the person; and said lower edge being of relatively soft pliable material adapted to conform to the person's body so as to afford a substantial seal against the free escape of liquid from between the web and the person's body, said lower edge however having at least one drain opening to control the escape of such liquid.

2. The invention defined in claim 1, in which: one end of the belt is narrower in vertical dimension than the other end so as to be received inwardly of and be overlapped by said other end in waist-encircling position.

3. The invention defined in claim 1, including: spacer elements on and spaced lengthwise of the inner surface of the web and adapted to contact the person for spacing said web from the person's body.

4. The invention defined in claim 1, including: a pad element on the belt adjacent to the upper edge thereof and generally centrally between its two ends and adapted to contact the person in the small-of-the-back area.

5. The invention defined in claim 1, in which: the fastener means is adjustable to adapt the belt to waist areas of different sizes.

6. The invention defined in claim 1, in which: the liquid-inlet means includes an elongated tube connected to said upper edge and having a free end provided with an adapter receivable by a water faucet.

References Cited in the file of this patent

UNITED STATES PATENTS

2,544,381 Goldmerstein ---------- Mar. 6, 1951
2,725,054 Harpel ---------- Nov. 29, 1955