United States Patent [19]

Ringle

[11] **Patent Number: Des. 313,206**

[45] **Date of Patent: ** Dec. 25, 1990**

[54] **MOUNTAIN BICYCLE STEM**

[76] Inventor: **Geoffrey F. Ringle,** 203 Afton Ave., Trenton, N.J. 08618

[**] Term: **14 Years**

[21] Appl. No.: **329,695**

[22] Filed: **Mar. 27, 1989**

[52] **U.S. Cl.** **D12/118**

[58] **Field of Search** D12/118; 280/279, 280; 403/233, 234, 235, 236; 74/551.1, 551.2

[56] **References Cited**

U.S. PATENT DOCUMENTS

D. 297,000	8/1988	Borromeo	D12/118
D. 300,014	2/1989	Borromeo	D12/118
D. 307,405	4/1990	Riyota	D12/118
4,323,263	4/1982	Cook et al.	74/551.1
4,770,435	9/1988	Cristie	74/551.2

OTHER PUBLICATIONS

American Bicyclist & Motorcyclist, Apr., 1988, p. 31, MTS-128-1 Welded CR-MO Mountain Bike Stem.

American Bicyclist & Motorcyclist, Apr., 1988, p. 40, ATB.P Bend/Pioneer Adjustable Stem.

Primary Examiner—James M. Gandy
Assistant Examiner—Melody Brown
Attorney, Agent, or Firm—Sperry, Zoda & Kane

[57] **CLAIM**

The ornamental design for a mountain bicycle stem, as shown.

DESCRIPTION

FIG. **1** is an isometric view of a mountain bicycle stem embodying my new design;
FIG. **2** is a left side elevation view thereof;
FIG. **3** is a top plan view thereof;
FIG. **4** is a bottom plan view thereof;
FIG. **5** is a front elevation view thereof; and
FIG. **6** is a rear elevation view thereof.

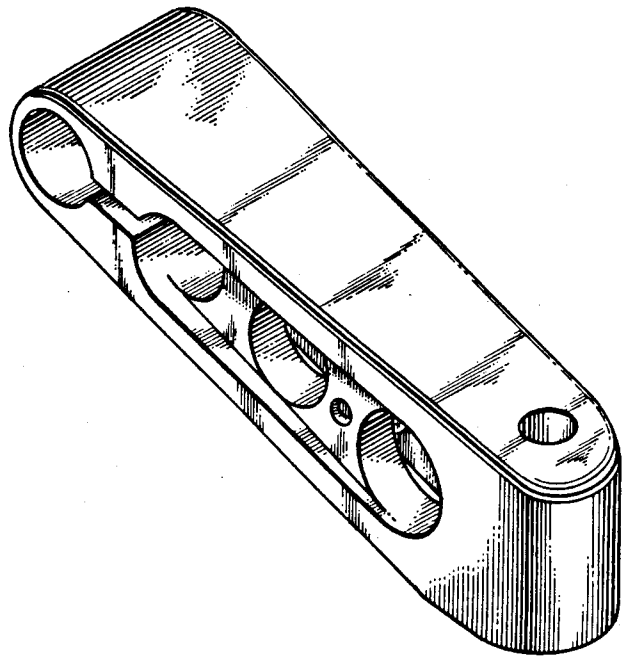

FIG. 1

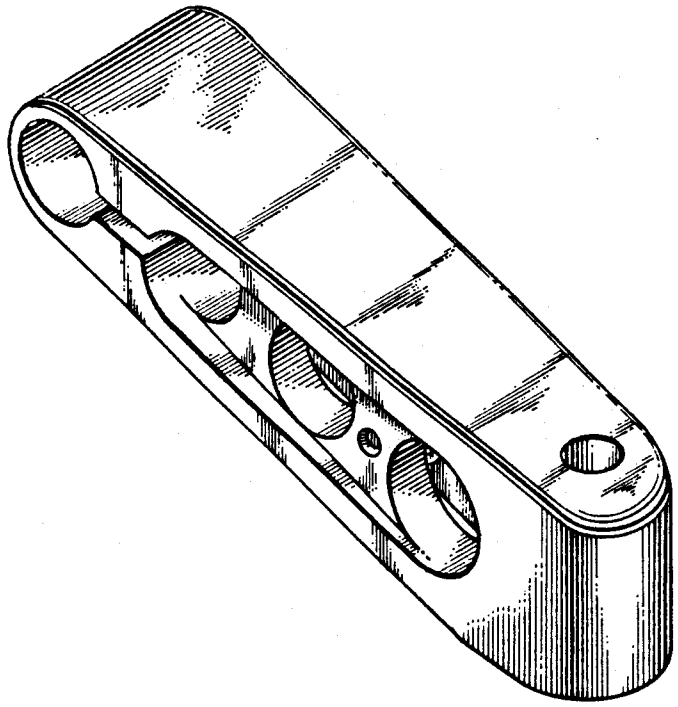

FIG. 2

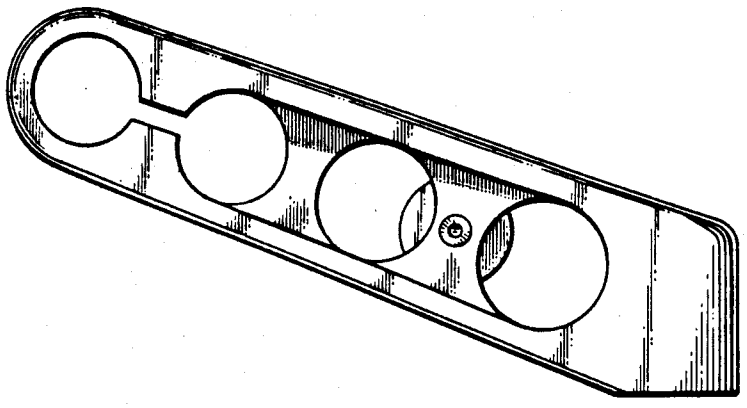

FIG. 3

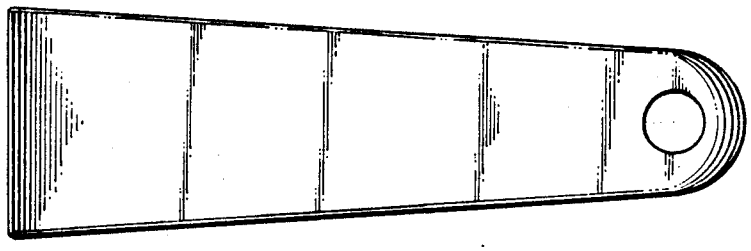

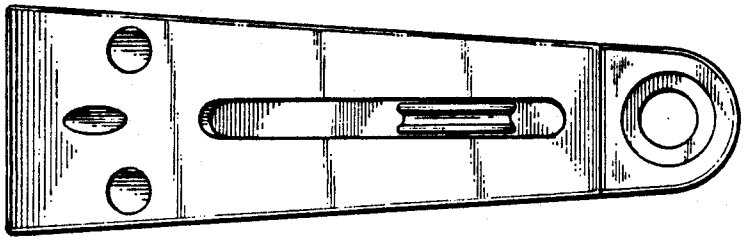

FIG. 4

FIG. 6

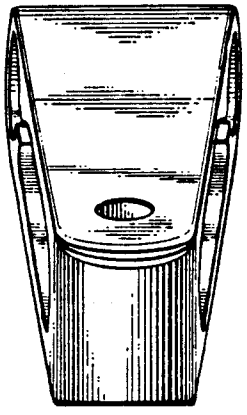

FIG. 5

