March 30, 1948. A. A. McCORMACK 2,438,572

TERMINAL STRUCTURE FOR REFRIGERATING APPARATUS

Filed May 11, 1944

FIG. 1

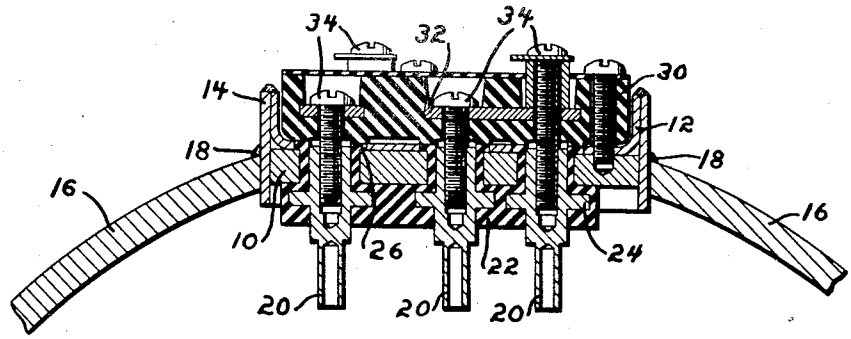

FIG. 2

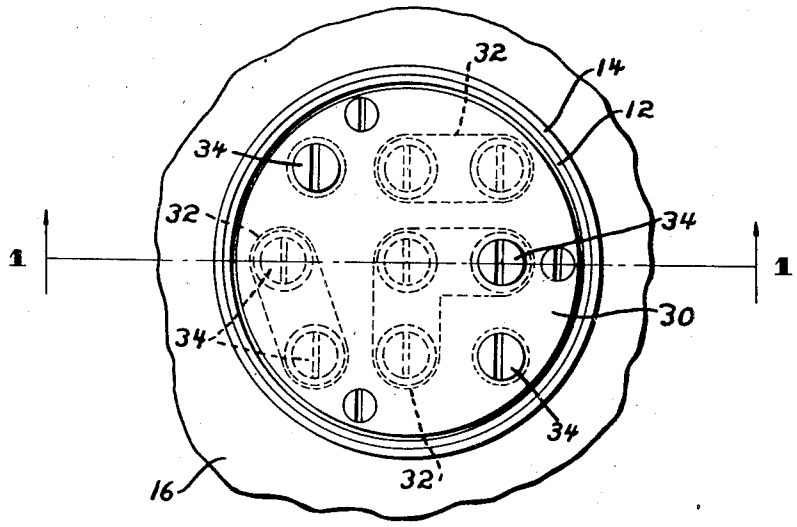

INVENTOR.
Alex A. McCormack.
BY
Spencer, Hardman & Fehr,
His Attorneys.

Patented Mar. 30, 1948 2,438,572

UNITED STATES PATENT OFFICE

2,438,572

TERMINAL STRUCTURE FOR REFRIGERATING APPARATUS

Alex A. McCormack, Cleveland, Ohio, assignor to General Motors Corporation, Dayton, Ohio, a corporation of Delaware

Application May 11, 1944, Serial No. 535,066

6 Claims. (Cl. 174—153)

1

This invention relates to refrigerating apparatus and more particularly to an improved electric terminal assembly for use in a sealed motor-compressor unit.

Terminals of the type which have been used satisfactorily by the millions in ordinary household refrigerators have proven very unsatisfactory when used in large sealed commercial units using higher refrigerant pressures and higher voltages. Attempts to modify the prior art type of terminals for use in the larger systems merely increased the cost of the terminals without eliminating frequent failures. Prior to my invention, the electric terminal assembly was one of the expensive items of a sealed motor-compressor unit and was also one of the main causes of service difficulties.

It is an object of this invention to not only reduce the cost of the terminal assembly but also to improve upon the reliability of the terminal assembly.

A further object of this invention is to provide a terminal construction which combines the advantages of a terminal using a vulcanized sealing element with the advantages of a terminal in which pressure is applied to the sealing element for providing a tight seal.

Another object of this invention is to improve the construction of the terminal so that pressure may be applied to a synthetic rubber sealing material while the synthetic rubber is being vulcanized to the metallic terminal studs and mounting plate.

A further object of this invention is to provide a multiple terminal assembly wherein all of the terminals are vulcanized in place in a single operation.

A still further object of this invention is to provide an improved terminal assembly in which a single means is provided for connecting the leads to the terminals and for applying pressure to the sealing material.

Another object of this invention is to provide a terminal assembly in which the main portion of the terminals are well protected from injury during shipment and the like.

Further objects and advantages of the present invention will be apparent from the following description, reference being had to the accompanying drawings, wherein a preferred form of the present invention is clearly shown.

In the drawings:

Fig. 1 is a sectional view taken on line 1—1 of Fig. 2;

2

Fig. 2 is a plan view of the terminal construction shown in Fig. 1.

Referring now to the drawing wherein I have shown a preferred embodiment of the invention, reference numeral 10 designates a terminal plate which is hydrogen brazed or otherwise secured to a stamped sheet metal mounting cup 12. Reference numeral 14 designates a cylindrical element which is welded to the cup 12 adjacent the upper edge of the cup 12 whereby a fluid tight joint is formed between the cup 12 and the cylindrical element 14. The element 14 is welded to the motor-compressor casing 16 at 18 whereby a fluid tight joint is provided between the casing 16 and the cylindrical element 14. The construction and arrangement of the elements 10, 12 and 14 may be varied somewhat without defeating the main purpose of my invention.

Prior to welding the element 14 to the casing 16, a plurality of terminal studs 20 are vulcanized in place relative to the terminal plate 10 by means of the synthetic rubber material 22. The terminal studs 20 are of very simple construction and may be made on ordinary automatic screw machine equipment with the result that the cost thereof is very low. The construction and arrangement of the terminal studs 20 and the terminal plate 10 is such that a portion of the synthetic rubber material is required to flow between the bottom face of the terminal plate 10 and the upper face of the flange 24 provided on the terminal stud 20. By virtue of this construction, pressure may be applied to the synthetic rubber between the flange 24 and the terminal plate 10 during the vulcanizing process whereby a very good vulcanized joint is provided. It has been found that a joint in which pressure is applied in this manner during the vulcanizing operation is very superior to other types of vulcanized joints.

In the construction shown, the synthetic rubber between the upper ends of the terminal studs 20 and the apertures in the terminal plate 10 serves to insulate the terminal studs from the plate. It will be noted that a portion of the synthetic rubber overlies the upper face of the terminal plate 10 adjacent each aperture as shown at 26. A block of insulation 30 is held in place against the synthetic rubber at 26 whereby arcing across the terminals is prevented. The block 30 forms a contact mounting member or means and carries suitable conducting elements such as the elements 32 which are used for electrically connecting various terminals. Lead wires are connected to certain of the terminals by means of some of the screws 34 which help to hold the

block 30 in place and which serve to pull the flanges 24 of the terminal studs 20 closer to the plate 10 whereby the synthetic rubber material between the flanges and the plate 10 is compressed so as to more securely seal the openings in the plate 10 through which the terminals pass.

In order to standardize on the motor constructions and in order to make it possible to connect the same motor to different types of power lines without disturbing the internal connections, nine terminals are provided as shown whereby the various field coils of the motor (not shown) may be connected in any desired manner merely by changing the external contacts or connections carried by the contact mounting member or block 30. While I have shown nine terminals, any number of terminals may be used.

It will be noted that the terminal studs 20 do not project far enough beyond the outer face of the plate 10 that there is any danger of them becoming injured after once the plate is mounted on the casing 16. It will also be noted that the terminal studs 20 do not project upwardly as high as the overlying portion 26 of the synthetic rubber insulating material. Notwithstanding the simplicity of the device, it incorporates excellent insulating barriers between the terminals and ground and between adjacent terminals. The device also lends itself to low cost mass production methods.

While the form of embodiment of the invention as herein disclosed constitutes a preferred form, it is to be understood that other forms might be adopted, as may come within the scope of the claims which follow.

What is claimed is as follows:

1. In combination, a casing having an opening therein, a terminal assembly mounted within said opening, said terminal assembly comprising a terminal plate having a plurality of terminal receiving apertures therein, a plurality of terminal studs within said casing and projecting into said apertures, said terminal studs having tapped recesses exposed on the outer side of said plate, flanges on said terminal studs overlying the inside face of said terminal plate, synthetic rubber gasket material disposed between said flanges and said plate and vulcanized to said flanges and said plate, said gasket material extending through said apertures and overlying portions of the outside face of said terminal plate, a contact mounting member of insulating material having a plurality of apertures in alignment with said tapped recesses, and threaded terminal screws projecting through said last-named apertures and into said tapped recesses whereupon tightening said terminal screws compresses the synthetic rubber gasket between said flange and said terminal plate.

2. In combination, a terminal plate having a plurality of apertures therein, a mounting cup secured to said terminal plate and provided with a flange for mounting said terminal plate within an opening in a support, a plurality of tapped terminal studs adjacent said apertures on the one side of said plate, a plurality of terminal screws threaded into said tapped openings from the opposite side of said plate, said studs having flanges projecting over said plate, a synthetic rubber gasket vulcanized to said tapped terminal studs and said terminal plate and forming an insulating barrier between said terminal studs and said terminal plate, said flanges being embedded in said synthetic rubber.

3. An electrical terminal assembly adapted to conduct electrical energy through a wall of a container comprising in combination, terminal supporting means including a terminal supporting plate having a plurality of apertures therein, terminal studs in alignment with said apertures and having flanges thereon larger than said openings and spaced from said plate, resilient material vulcanized to said flanges and said plate and serving to space said flanges from said plate, said studs having tapped openings in the outer ends thereof for the reception of terminal screws from the outside of said container, the outer ends of said terminal studs being disposed below the outer surface of said terminal supporting means so as to be protected from injury by said terminal supporting means, a portion of said resilient material extending cnto the outer face of said plate, a block of insulating material adjacent the outer face of said plate in contact with said resilient material which extends onto the outer face of said plate, conducting elements carried by said block of insulating material for electrically connecting certain of said terminal studs, and terminal screws connected to certain of said studs and serving to hold said insulating block against said resilient material.

4. In combination, a terminal plate having a terminal receiving aperture therein, a terminal stud projecting into said aperture, said terminal stud having a tapped recess exposed on the one side of said plate, a flange on said terminal stud overlying the inside face of said terminal plate, gasket material disposed between said flange and said plate and vulcanized to said flange and said plate, said gasket material extending through said aperture and overlying portions of the face of said terminal plate, a contact mounting member overlying said terminal plate and having an aperture in alignment with said tapped recess, a threaded terminal screw projecting through said last-named aperture and into said tapped recess whereupon tightening said terminal screw compresses the gasket material between said flange and said terminal plate.

5. In combination, a casing having an opening therein, a terminal assembly mounted within said opening, said terminal assembly comprising a terminal plate having a plurality of terminal receiving apertures therein, a plurality of terminal studs within said casing and projecting into said apertures, each of said terminal studs having a tapped recess exposed on the one side of said plate, a flange on each of terminal studs overlying the inside face of said terminal plate, gasket material disposed between said flanges and said plate and vulcanized to said flanges and said plate, said gasket material extending through said apertures and overlying portions of the outside face of said terminal plate, apertured contact mounting means overlying said terminal plate, and terminal screws projecting through said apertured contact mounting means and into said tapped recess whereupon tightening said terminal screws compresses the gasket between said flange and said terminal plate.

6. An electrical terminal assembly adapted to conduct electrical energy through a wall of a container comprising in combination, a terminal supporting plate having a plurality of apertures therein, terminal studs in alignment with said apertures and having flanges thereon larger than said openings and spaced from said plate, resilient material vulcanized to said flanges and said plate and serving to space said flanges from said plate, said resilient material extending through

said apertures and overlying portions of the outside of said terminal plate, said studs having tapped openings in the outer ends thereof for the reception of terminal screws from the outside of said container, the outer ends of said terminal studs being disposed below the outer surface of said resilient material which overlies said terminal supporting plate so as to be protected from injury.

ALEX A. McCORMACK.

REFERENCES CITED

The following references are of record in the file of this patent:

UNITED STATES PATENTS

Number	Name	Date
1,174,027	Amon	Feb. 29, 1916
1,391,944	Dodgson	Sept. 27, 1921
1,768,522	Brown	June 24, 1930
2,177,377	Polivka	Oct. 24, 1939
2,265,341	Borchert	Dec. 9, 1941
2,307,561	Bailey	Jan. 5, 1943
2,315,492	Anderson et al.	Apr. 6, 1943
2,368,548	Kalstein	Jan. 30, 1945