Aug. 28, 1934. J. ERICKSON 1,971,481

CONTACT BANK

Filed Feb. 25, 1932

Fig. 1

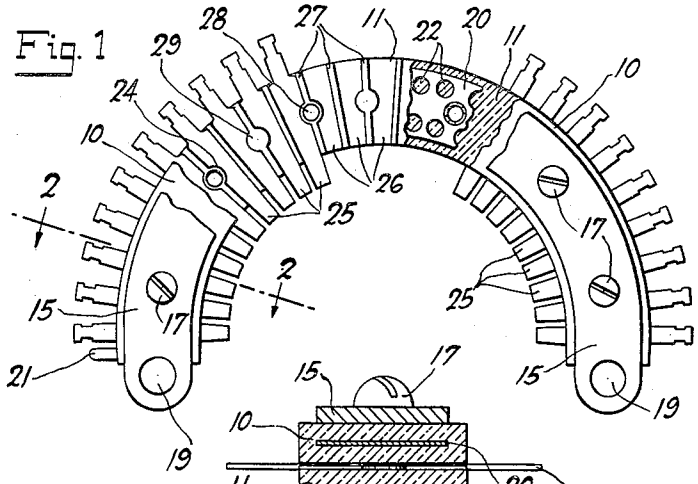

Fig. 2

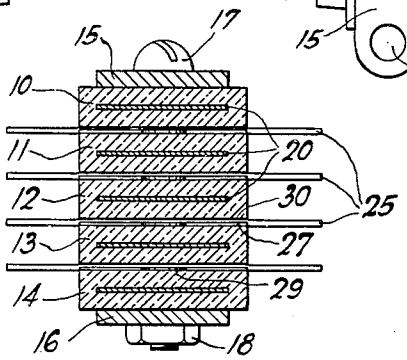

Fig. 3

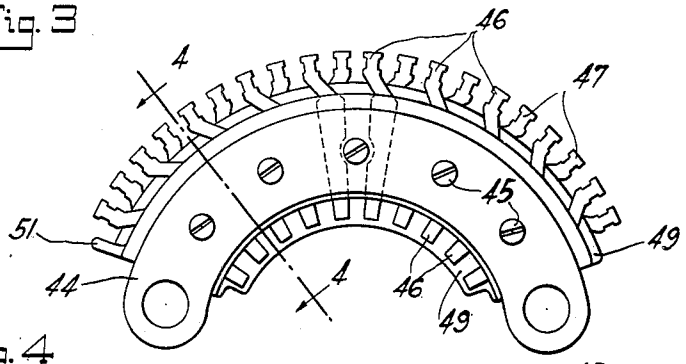

Fig. 4

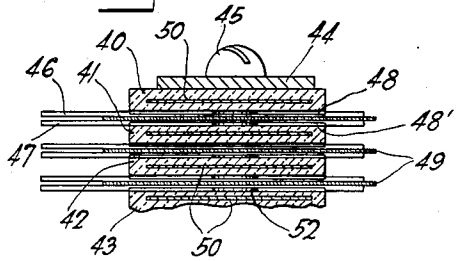

Fig. 5

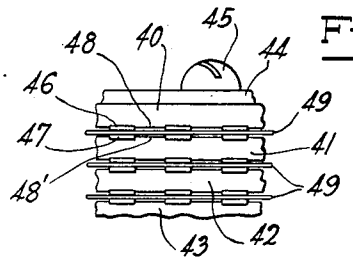

Inventor
John Erickson

Wm Walter Owen

Atty.

Patented Aug. 28, 1934 1,971,481

UNITED STATES PATENT OFFICE

1,971,481

CONTACT BANK

John Erickson, Chicago, Ill., assignor to Associated Electric Laboratories, Inc., Chicago, Ill., a corporation of Delaware

Application February 25, 1932, Serial No. 595,110

8 Claims. (Cl. 175—306)

This invention relates generally to contact banks, but more particularly to contact banks for automatic switches such as are used in telephone systems for example.

The principal object of the invention is to design an improved switch contact bank which is simple in construction, cheap to manufacture and easy to assemble.

A further object of the invention resides in the design of a switch contact bank having few parts and in which the individual contact terminals are securely locked in position after having been assembled in the bank.

In accordance with the above objects a plurality of the individual contact terminals are assembled and separated in adjacent rows by arcuate plates of insulating material, each of which is provided with a series of ridges or ribbed portions slightly raised from the surface of the plates. The contacts of each row are arranged radially on the plate in shallow depressions formed between the ridges. Alternate ones of the ridges on the plates are provided with bosses which fit into notches cut on one side of the individual contact elements so that they are securely locked in position on the plate when a corresponding similar insulating plate is clamped on top of it.

Heretofore contact banks have been made in which one or more relatively thin layers of insulating material were provided on each side of a row of bank contacts held in position between these plates solely by adhesion and clamping means. Also adjacent rows of contacts were usually separated the desired distance from each other by metal spacers, which at the same time served to lend rigidity to the bank. Banks constructed in accordance with this method are not suitable for use in places where excessive humidity prevails. This is because under these conditions they absorb moisture causing them to have a tendency to warp and buckle, thereby throwing the bank contacts out of alignment and resulting in them breaking off or being bent, or resulting in damage to the wipers. According to the present invention these difficulties are overcome by employing plates preferably of moulded bakelite, which is inherently non-hydroscopic and cannot warp. In moulding these plates a metal plate is imbedded therein which serves as a grounding plate employed to prevent cross-talk between adjacent rows of contact banks, and also adds strength to the bank as well.

A particular feature of the invention is the arrangement of the ridges on the insulating plate so that when a number of insulating plates and associated bank contacts are clamped together one on top of another to form a unitary structure, it is easy to loosen up the clamping screws, insert a wedge, and remove a damaged or bent bank contact and insert a new one without disrupting the arrangement of the other bank contacts. This was not possible in previous types of construction of bank contacts.

Other objects and features not specifically pointed out will be apparent hereinafter in the detailed description which, together with the accompanying sheet of drawings illustrate a preferred embodiment of the invention. In the drawing, Fig. 1 shows a top elevation partly in section of a 25-point contact bank for a single motion rotary switch; Fig. 2 shows a side elevation in section along the line 2—2 of Fig. 1 and illustrates four levels or rows of bank contacts; Fig. 3 illustrates a top view of the line bank for the well-known two-motion Strowger automatic switch; Fig. 4 is a side cross-sectional elevation along the line 4—4 of Fig. 3 illustrating three levels of pairs of line contacts, while Fig. 5 is a front view of a portion of the bank shown in Fig. 3.

A type of rotary switch and bank of which this invention is an improvement and which is similar to that illustrated in Fig. 1, is shown and described in the book entitled "Automatic Telephony" by Smith and Campbell, second edition, published by McCraw Hill Book Company, on page 51. The construction of the switch mechanism for the two motion Strowger bank similar to that illustrated in Fig. 3, is shown and described on pages 55 and 56.

Referring now more particularly to Figs. 1 and 2, this shows a bank contact structure suitable for a switch of the well-known rotary type in which the wipers always contact with the same row or level of bank contacts. Only four rows or levels of bank contacts are shown in Figs. 2, but it will be understood that this is only for illustrative purposes as any number may be arranged to make a single unitary bank structure. The bank structure comprises a plurality of arcuate shaped insulating plates 10, 11, 12, 13, and 14, arranged one on top of the other. These curved insulating plates are moulded of insulating material such as bakelite, for example, which readily lends itself to any desired shape or form, is non-hydroscopic in that it does not absorb moisture, is impervious to acid or corrosion, is relatively stiff and does not bend or buckle easily under uneven stresses. This material is, therefore, an ideal insulator for bank contact structures.

The metal bank contacts or terminals are in-

serted between each pair of plates and metal plates 15 and 16 on the top and bottom, in conjunction with bolts 17, are used to clamp the whole assembly together. A relatively thin metal strip 20 is embedded or moulded exactly in the center of each insulating strip except that at one point a soldering tag 21 projects from the bank. This thin metal insert 20 has a series of holes or openings 22 punched throughout its surface so that the insulating compound when moulded around the plate 20, may unite through the holes 22 from each side of the plate.

The uppermost insulating plate 10, it will be noted, is smooth on the top and bottom surfaces as seen in Fig. 2. The top surface of insulating plate 11, however, is moulded with a series of recurring ridges or raised portions 27 extending throughout its top surface only and radially disposed to converge toward a central point which is the axis of the usual cooperating wiper shaft. The ridges or raised portions 27 are separated from each other by relatively shallow cut-out portions 26 of the insulating plate 11. The ridges 27 are provided at their center with bosses 28 of the same height as the ridges 27 and have a hole extending through the insulating plate 11, for accommodating the bolts 17. Between each pair of bosses 28 a similar boss 29 is provided in the ridges 27, but these do not have openings in them. The bosses 29 are raised from the top surface of the plate 10 the same height as the ridges 27. Insulating plates 12, 13, and 14 are constructed the same way as plate 11.

The bank contacts 25 are all stamped and cut to the same shape and are made of suitable hardened brass or other metal having a portion in the front thereof over which the wipers of the switch are adapted to wipe and make contact, while the rear ends thereof serve as soldering tags for the attachment of connecting wires. Each bank contact or terminal 25 is provided with a notch 24 cut intermediate the ends. In assembling the bank the contacts or terminals 25 are laid into the shallow depressions 26 on the plate 11 for example, and on the top face thereof so that the cut-out portions 24 coincide with the bosses 28 and 29 and so that each contact is separated from its adjacent contact by a ridge or raised portion 27. The bosses 28 and 29 are molded directly out of the insulating plate 11 at the same time that the metal insert is made. When a complete row of contact terminals 25 are arranged side by side in the shallow depressions 26 of the plate 11 the plate 10 is laid directly on top. The other plates 12, 13, and 14, together with their terminals are assembled in the same manner.

As seen in Fig. 2, each terminal is constructed or stamped out of material which is of a particular definite thickness. The ridges 27 of the insulated plate 11, together with the bosses 28 and 29 thereon are likewise of a definite height or elevation from the top portion of the insulating plate. This height, however, is not quite as great as the thickness of the contact terminals 25. From this arrangement it will be seen in Fig. 2 that when the insulating plate 10, which has a smooth lower surface, is clamped on to the top of the insulating plate 11 and the nut 18 tightened onto the bolt 17 the ridges 27 of plate 11 cannot come into engagement with the smooth surface of the insulating plate 10, and a small space as indicated at 30, therefore, exists between each pair of plates. The full clamping force of the bolts 17 is, therefore, exerted directly onto the terminals 25, securely holding them in their desired position between the ridges 27. The notches 24 of terminals 25 engaging bosses 28 and 29 will securely lock the terminals in position and prevent withdrawal or accidental shifting and loosening laterally. The insulating plate 10, as has been pointed out, is smooth on both sides while the insulating plates 11, 12, 13, and 14 are smooth on only the bottom surface while the top surfaces are provided with the ridges 27, bosses 28 and 29, which produce the shallow portions 26 separating the adjacent ridges.

When it is desired to replace a damaged or broken contact terminal 25 it is only necessary to loosen a pair of bolts 17 and their associated nuts 18, between which the bank terminal is supported, insert a wedge between the insulating plates and remove the damaged contact and insert a new one. This may readily be done without disturbing the adjacent contact terminals. The above arrangement considerably reduces the number of parts required for a bank contact assembly in addition to providing an easy method of assembling them, due to the ease with which the desired ridges and bosses may be moulded directly into the insulating plates. In the former type of bank assembly in which a large number of insulating plates and metal stiffening plates are provided, and in which the bank terminals are adhesively attached to the plates, great variations exist in the alignment of the terminals when the bank unit is clamped and, at times, the bank contacts not being in alignment with the wipers traveling over them they became damaged or bent. In the construction according to the invention this is impossible as the rows of bank contacts are always in alignment, because of the fact that the insulating plates which are clamped directly against each other between the bank contact 25, are inherently rigid and cannot warp or buckle and are capable of compression only to a certain extent, after which they cannot be further compressed without breaking.

Figs. 3, 4, and 5 are directed to an embodiment of the invention as employed in the well-known Strowger type of switch bank in which there are ten contacts or terminals in a row and ten rows of ten contacts each as shown in the aforesaid book on "Automatic Telephony". The line bank contacts of a Strowger bank must be arranged with the contacts in pairs in each level or row, as the uppermost contact constitutes the negative line while the lower constitutes the positive line bank. This necessitates the placing of each pair of bank contacts or terminals relatively close together so that a single wiper having two separated insulated leaves may engage both contacts at the same time. A number of insulated plates 40, 41, 42, and 43, etc. are clamped one on top of the other in a manner similar to that shown in Fig. 2. These insulated plates are provided with metal inserts 50 having soldering tags 51 to which a grounded wire may be attached for dissipating the cross-talk between adjacent levels or adjacent bank contacts of the switch banks when they are in use. The whole assembly is clamped between two similar plates such as 44 and held in position by bolts 45. The top insulating plate 40 is moulded smooth on the top surface as is the bottom surface of the last insulating plate (not shown). The intermediate insulating plates 41, 42, and 43, etc. are provided on both surfaces thereof with the ridges 48 and 48' similar to the ridges 27 of Fig. 1. Midway between the two edges of the insulating plate on the ridges are a series of bosses 52, such

as 28 and 29 of Fig. 1, some of which have holes for accommodating the bolts 45. In order to prevent contact between pairs of line bank contacts 46 and 47 a relatively thin insulating plate 49 is provided between them. This plate 49 extends across a level or row between all of the pairs of contacts in that row, as shown clearly in Fig. 5. Each pair of insulating plates 41 and 42, Fig. 4, for example, therefore, are clamped directly onto terminals 46 and 47 which are separated by the insulating plate 49. A small space exists between the plates 41 and 42 from its associated plate 49, due to the fact that the bank contacts or terminals are slightly thicker than the height of the ridges 48 and 48' and the bosses 52. The plates 41 and 42, therefore, do not touch the insulated plate 49 but are held away from it by the terminals. As shown in Fig. 3 the terminal end of the bank contacts of each row, for the attachment of the connecting wires, may be slightly offset on the rear so that pairs of bank contacts 46 and 47 will not have their soldering tags one immediately above the other and in this way more room is provided for attachment of the conductors.

As in Fig. 1 the bank contacts 46 and 47 have notches cut in them for engaging the bosses on the insulating strips 40, 41, etc., and withdrawal or accidental lateral displacement of the bank contact is, therefore, prevented. As in the first described form of the invention the large number of stiffening ribs, metal plates, insulating cloth, or other strips are dispensed with, thereby considerably reducing the number of piece parts required for assembling a bank and also preventing the distortion and warping of the bank unit inherent in the previous type of construction. In certain types of switch banks it is evident that the terminals may be differently formed and arranged, and instead of providing ridges on the surface of each insulating strip, depressions may be provided and contemporary ones in the bank contacts may be made to fit into the ones of the insulating strips without departing from the spirit of the invention, which is limited only by the scope of the appended claims.

What is claimed is:

1. In a bank contact arrangement, a plurality of arcuate insulated plates, ridges formed on a side of said plates, bosses formed on alternate ones of said ridges between the edges of said plates, and contact terminals regularly disposed between said ridges and locked in position on said plates by said bosses.

2. In a contact bank arrangement, a plurality of superimposed insulating plates, ridges evenly spaced and regularly disposed on the surfaces of said insulating plates, bosses formed on said ridges between the edges of said insulating plates, a row of contact terminals on each side of said insulating plates and disposed between said ridges, said contact terminals having notches cut into them for engaging said bosses to prevent lateral displacement of the terminals, and means for clamping said contact terminals and said insulating plates together in a solid unitary structure.

3. In a contact bank arrangement, a plurality of insulating plates superimposed upon each other, a plurality of regularly disposed ridges formed on opposite sides of said plates, contact terminals arranged on said plates between said ridges, means for clamping said insulating plates and contact terminals together to form a single unit, and metal grounding plates imbedded in each of said insulating plates and arranged between adjacent rows of contact terminals.

4. In a contact bank arrangement for automatic switches, a plurality of arcuate insulating plates superimposed upon one another, ridges evenly spaced on opposite sides of said insulating plates, rows of contact terminals regularly disposed on each of said plates and between said ridges, bosses formed on said ridges between the edges of said insulating plates for holding the individual contact terminals against radial displacement, ground plates imbedded in each of said insulating plates, a metal clamping plate on the top and bottom ones of said insulating plates, and means for clamping said clamping plates, contact terminals, and insulating plates together to form a single unitary structure.

5. A contact bank for automatic switches for telephone use comprising a plurality of superimposed arcuate insulating plates, ridges formed on either side of said plates and regularly disposed in spaced relationship, pairs of contact terminals regularly disposed in rows between alternate ones of said insulating plates, a plurality of said contacts arranged in a row and a plurality of rows arranged between associated insulating plates to form a contact bank, a relatively thin insulating plate between the pairs of contacts in a row, and means for clamping said insulating plate, contact terminals and thin insulating plates together to form a bank structure.

6. In a contact bank, an arcuate insulating plate, narrow ribs formed radially on the surface of said plate so that their front edges are closer together than the rear edges, said ribs forming channels in the surface of said plate which are narrower at the front of the plate than at the back, contact terminals conforming to the shape of said channels and arranged therein on the plate, a plurality of similar plates and contact terminals arranged on top of one another, and means for clamping them together into a unitary structure and to hold said contact terminals in their position between said ribs.

7. In a contact bank, an arcuate insulating plate, narrow ribs formed radially on the surface of said plate with their front edges closer to one another than their rear edges, said ribs forming channels on the surface of said plates that are narrower at the front of the plate than at the back, contact terminals having the same shape as said chanels and mounted therein on said plate, and means formed on said ribs and said contact terminals for holding the terminals in position on said plate.

8. In a contact bank, an arcuate insulating plate, narrow ribs formed radially on the surface of said plate with their front edges closer to one another than their rear edges, said ribs forming channels on the surface of said plates that are narrower at the front of the plate than at the back, contact terminals having the same shape as said channels and mounted therein on said plate, said contact terminals having notches cut in their sides, and bosses formed on said ribs and engaging the notches of said contact terminals to hold them in position in the channels of the plate.

JOHN ERICKSON.