US 20030145423A1

(19) United States

(12) Patent Application Publication

(10) Pub. No.: US 2003/0145423 A1

(43) Pub. Date: Aug. 7, 2003

Park et al.

(54) SUCTION BRUSH FOR A VACUUM CLEANER

(76) Inventors: **Jung-Seon Park**, Gwangju-city (KR); **Il-Won Yang**, Gwangju-city (KR); **Hyung-Il Jeon**, Gwangju-city (KR)

Correspondence Address:
LADAS & PARRY
224 SOUTH MICHIGAN AVENUE, SUITE 1200
CHICAGO, IL 60604 (US)

(21) Appl. No.: 10/127,515

(22) Filed: Apr. 22, 2002

(30) Foreign Application Priority Data

Feb. 1, 2002 (KR) 2002-5769

Publication Classification

(51) Int. Cl.[7] A47L 5/10; A47L 5/30

(52) U.S. Cl. 15/391

(57) ABSTRACT

A suction brush rotatably disposed at a cleaner body to move along a cleaning surface for drawing in contaminants from the surface to be cleaned by a suction force generated from a motor driving chamber disposed at a lower portion of the cleaner body having a suction brush body, a brush bar rotatably disposed inside the suction brush body, for brushing the contaminants off from the surface to be cleaned, a driving force transmission belt disposed inside the suction brush body for transmitting a rotation force to the brush bar from a motor disposed in the motor driving chamber, and a belt checking cover pivotably disposed at a lower portion of the suction brush body to check the condition and contamination of the driving force transmission belt.

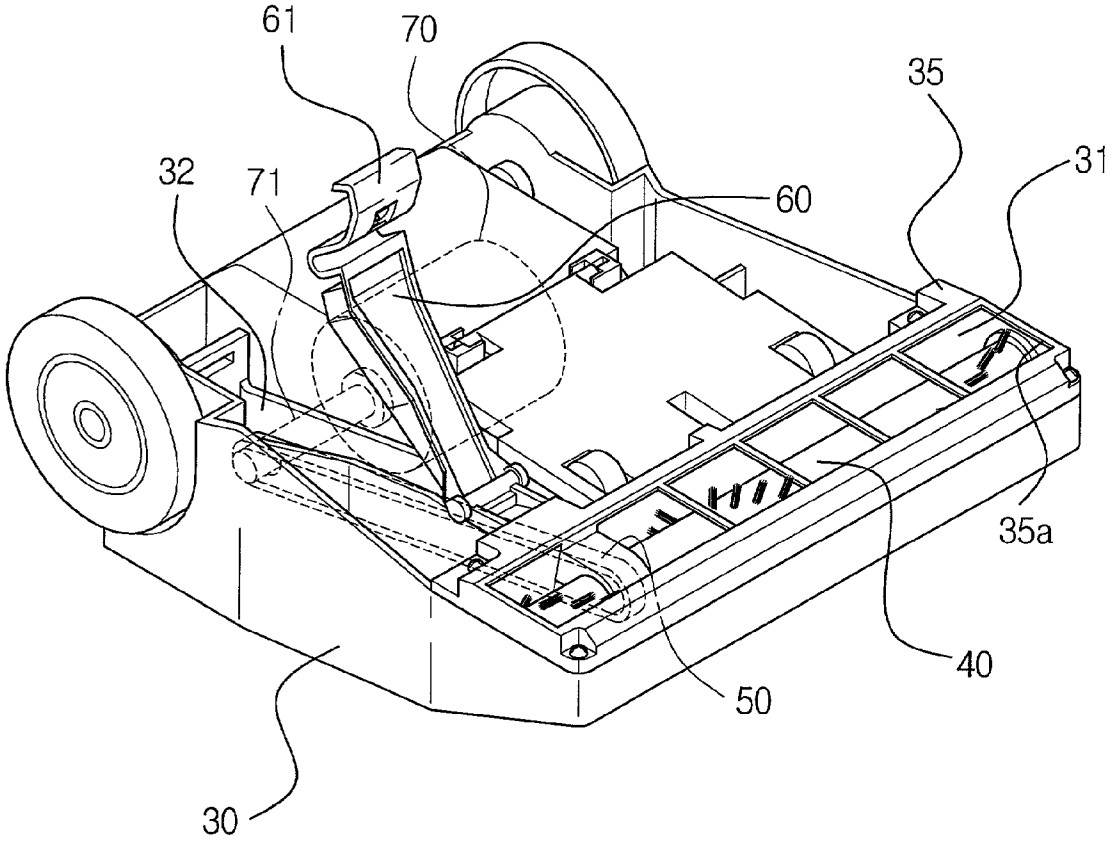

FIG. 1
(PRIOR ART)

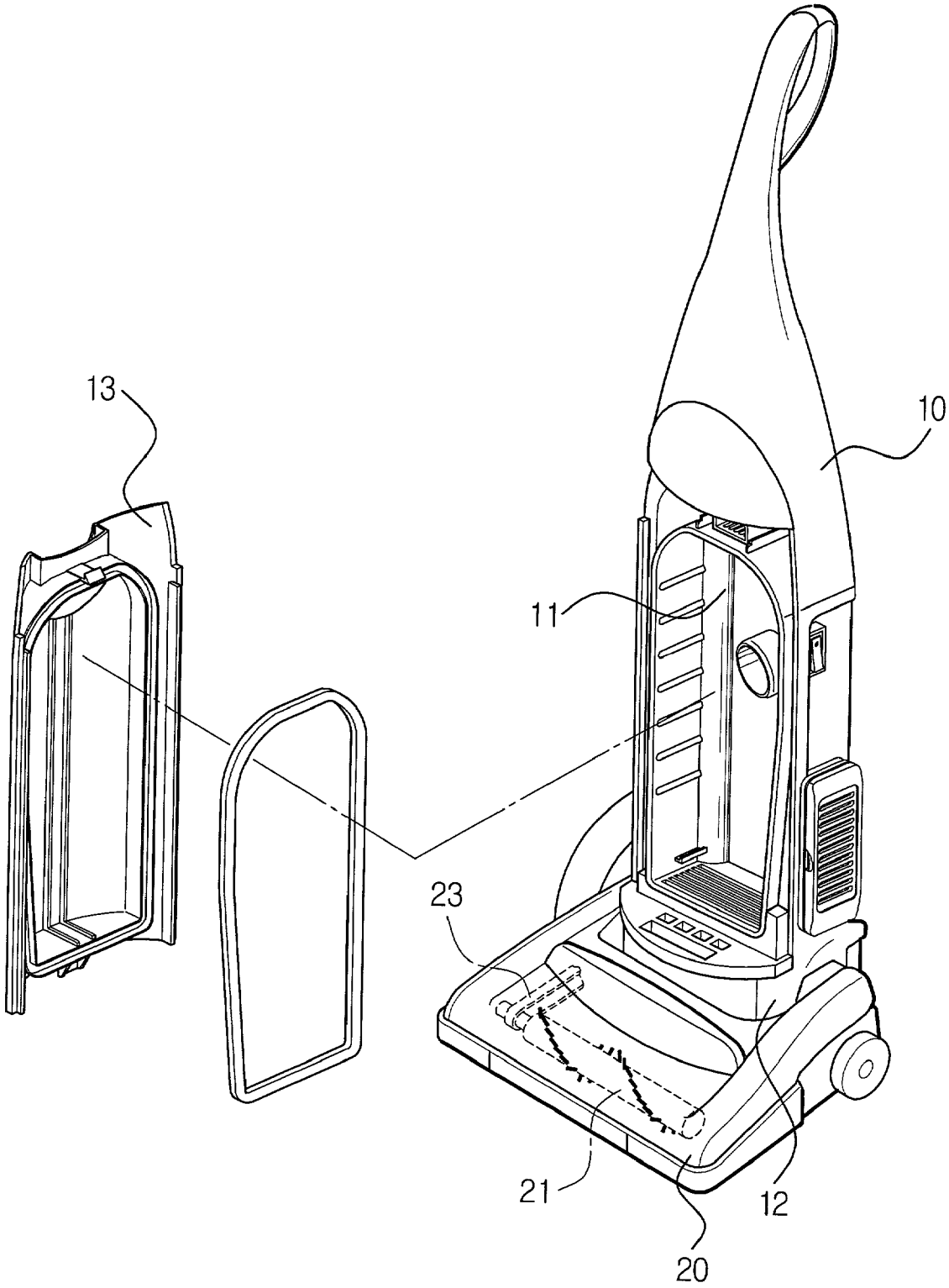

FIG.2

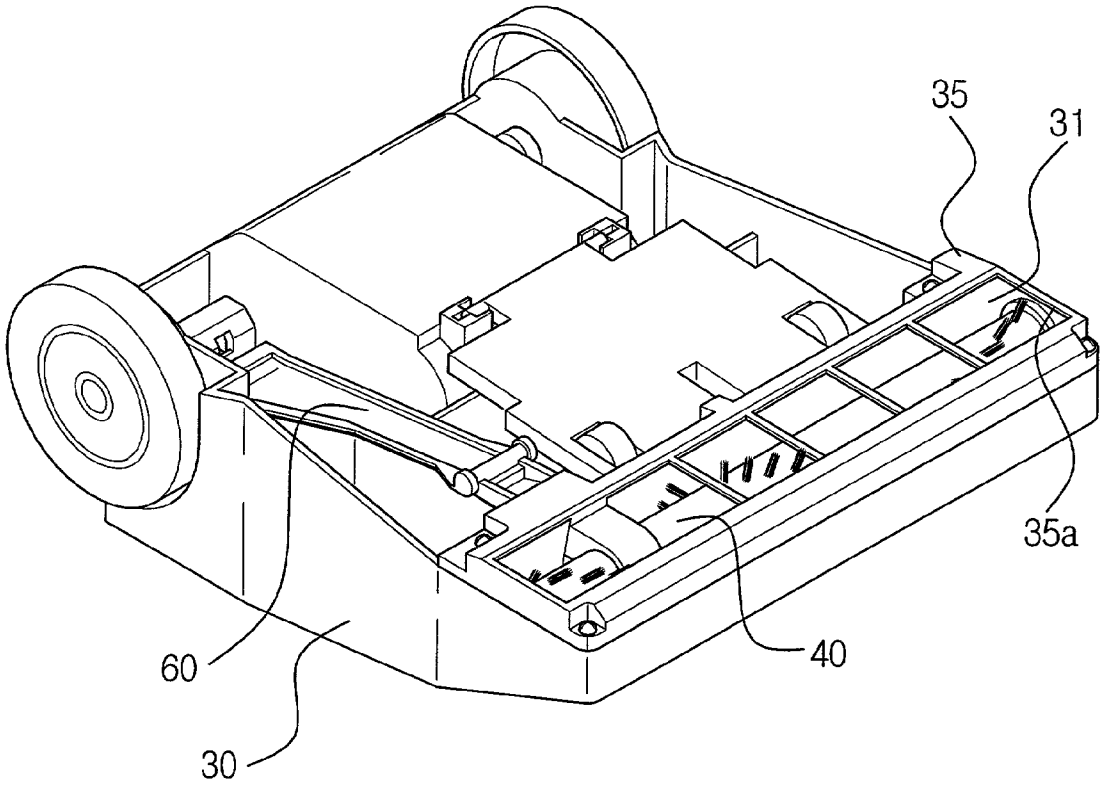

FIG.3

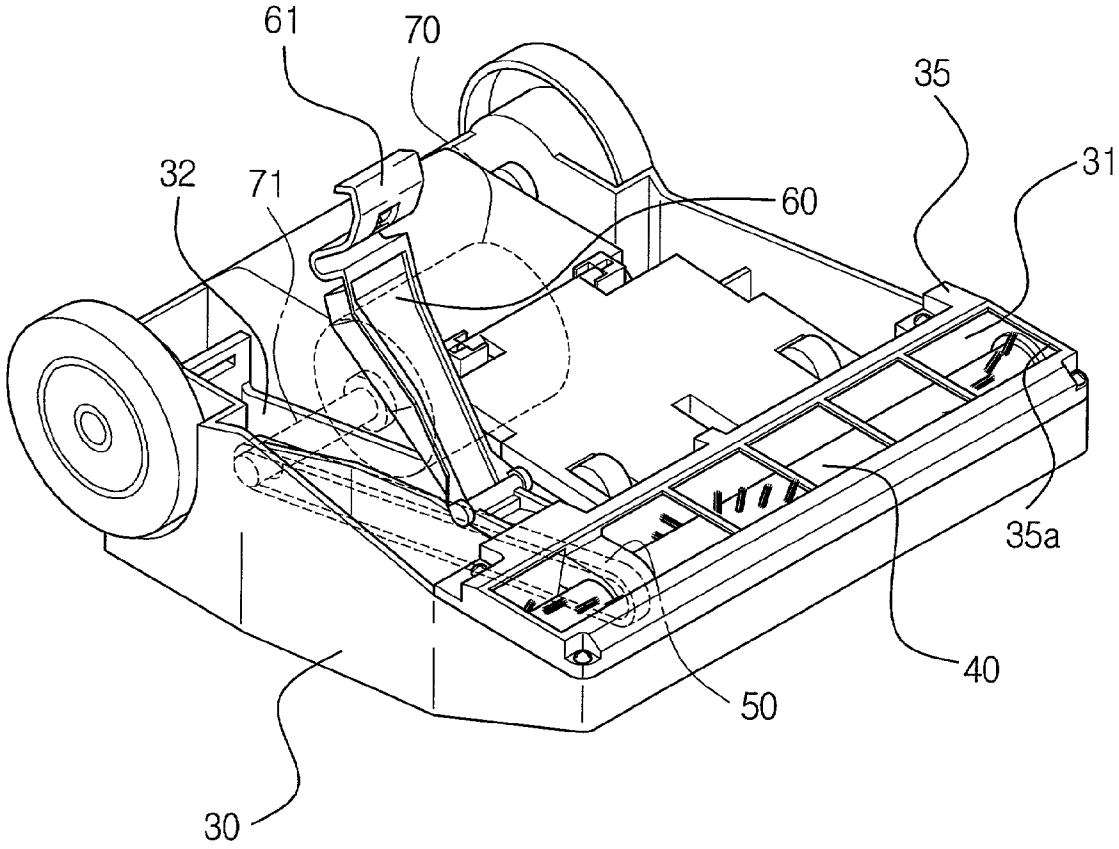

SUCTION BRUSH FOR A VACUUM CLEANER

BACKGROUND OF THE INVENTION

[0001] 1. Field of the Invention

[0002] The present invention relates generally to an upright type vacuum cleaner, and more particularly to a suction brush for an upright type vacuum cleaner that draws in air including dust and contaminants, while moving along a surface to be cleaned.

[0003] 2. Description of the Related Art

[0004] As shown in **FIG. 1**, an upright type vacuum cleaner generally comprises a suction brush **20** that is connected to a cleaner body **10** and moves along a surface to be cleaned. The cleaner body **10** is divided into a dust collecting chamber **11** where a dust filter (not shown) is removably disposed and a motor driving chamber **12** where a motor for generating a suction force is disposed. The dust collecting chamber **11** is opened and closed by a cover **13**.

[0005] Additionally, provided in the suction brush **20** is a brush bar **21** for brushing contaminants off the surface to be cleaned, while being exposed at a lower portion of the suction brush **20**. The brush bar **21** is rotated by a rotation force that is transmitted from the motor disposed in the motor driving chamber **12** via a driving force transmission belt **23** (shown in phantom).

[0006] In the above construction, when the motor is driven, a strong suction force is generated at a lower part of the suction brush **20**. Due to the suction force, the air, including dust and contaminants entrained therein, is drawn into the dust collecting chamber **11** of the cleaner body **10** from the cleaning surface.

[0007] The rotation force is also transmitted from the motor to the brush bar **21** via the driving force transmission belt **23**. The brush bar **21** rotates and brushes the contaminants off of the surface to be cleaned, thereby removing the contaminants from the surface to be cleaned, whereby the removed contaminants are also drawn into the dust collecting chamber **11**.

[0008] Meanwhile, the drawn air flows into a dust filter (not shown) disposed in the dust collecting chamber **11**. At this point, various contaminants entrained in the air are filtered through the dust filter and the air is discharged out through the motor driving chamber **12**.

[0009] However, the upright type vacuum cleaner as constructed above has a problem of contamination of the driving force transmission belt **23** where the dust and contaminants are inadvertently transferred from the brush bar **21**. Especially, when foreign matter such as hair or string, is caught in the driving force transmission belt **23**, the driving force is not efficiently transmitted to the brush bar **21** and thus can not rotate the brush bar **21**. Also, there may be an occasion that the driving force transmission belt **23** is cut during operation. Since it is necessary to check for contamination and the condition of the driving force transmission belt **23**, the suction brush **20** has to be separated from the vacuum cleaner. Therefore, an inconvenience arises since the condition of the driving force transmission belt **23** and the motor has to be checked.

SUMMARY OF THE INVENTION

[0010] The present invention is developed in order to solve the above problems. Accordingly, it is an object of the present invention to provide a suction brush for an upright type vacuum cleaner having an improved construction enabling easy checking of the condition of the driving force transmission belt of the suction brush.

[0011] The above object is accomplished by providing a suction brush for an upright type vacuum cleaner according to the present invention. According to the present invention, the suction brush is rotatably disposed and attached to a cleaner body to move along a surface to be cleaned, for drawing in contaminants from the surface to be cleaned by a suction force generated from a motor driving chamber disposed at a lower portion of the cleaner body, comprising a suction brush body, a brush bar rotatably disposed inside the suction brush body for brushing the contaminants from the surface to be cleaned, a driving force transmission belt disposed inside the suction brush body for transmitting a rotation force to the brush bar from a motor of the motor driving chamber, and a belt checking cover pivotably disposed at a lower portion of the suction brush body to check for contamination and the condition of the driving force transmission belt.

[0012] It is preferable that the belt checking cover is hinged on the brush bar cover disposed at a lower portion of the suction brush body, for covering the brush bar and having an opening port formed therein through which the brush bar may be exposed.

BRIEF DESCRIPTION OF THE DRAWINGS

[0013] **FIG. 1** is an exploded schematic perspective view showing a general upright type vacuum cleaner; and

[0014] **FIGS. 2 and 3** are perspective views showing a suction brush for an upright type vacuum cleaner according to the present invention.

DETAILED DESCRIPTION OF THE PREFERRED EMBODIMENT

[0015] Hereinafter, a suction brush for an upright type vacuum cleaner according to a preferred embodiment of the present invention will be described in greater detail with reference to the accompanying drawings.

[0016] Referring to **FIGS. 2 and 3**, a suction brush for an upright type vacuum cleaner according to a preferred embodiment of the present invention comprises a suction brush body **30**, a brush bar **40** disposed in the suction brush body **30**, a driving force transmission belt **50** (shown in phantom in **FIG. 3**), capable of traveling inside the suction brush body **30**, and a belt checking cover **60** disposed at a lower portion of the suction brush body **30**.

[0017] As shown in **FIG. 1**, the suction brush body **30** is rotatably connected to a lower side of a cleaner body. The lower side of the cleaner body is provided with a motor driving chamber for providing the suction brush body **30** with a suction force, as in a conventional upright type vacuum cleaner, such as that shown in **FIG. 1**.

[0018] The brush bar **40** is rotatably disposed in a first mounting section **31** provided in the suction brush body **30**. The brush bar **40** brushes contaminants off from a cleaning surface during the rotation. At a lower side of the suction brush body **30** a brush bar cover **35** for covering the brush bar **40** is removably connected. The brush bar cover **35** is

provided with an opening port **35***a* through which the brush bar **40** is outwardly or downwardly exposed, for drawing in contaminants and air therethrough.

[**0019**] The driving force transmission belt **50** travels inside the suction brush body **30** to transmit the driving force to the brush bar **40**. The driving force transmission belt **50** travels in a perpendicular direction with respect to the brush bar **40**. For this, the suction brush body **30** is provided with a second mounting section **32** perpendicular to the first mounting section **31**, for housing the driving force transmission belt **50** therein. The second mounting section **32** communicates with the first mounting section **32** and the motor driving chamber. Accordingly, a shaft **71** of the motor **70** (shown in phantom in **FIG. 3**) is mounted in the motor driving chamber and extends into the first mounting section **31**. The driving force transmission belt **50** is connected to the shaft **71** extended into the second mounting section **32** and the brush bar **40**, and travels between the shaft **71** and the second mounting section **32**.

[**0020**] The second mounting section **32** is opened and closed by the belt checking cover **60** to expose the driving force transmission belt **50**. The belt checking cover **60** easily opens the second mounting section **32** to check on the condition of the driving force transmission belt **50** or the contamination of the second mounting section **32** during the operation of the vacuum cleaner. One end of the belt checking cover **60** is pivotably connected to the brush bar cover **35**, as shown. The other end of the belt checking cover **60** is removably connected to and removed from the suction brush body **30** by a so-called "one touch" latching mechanism. For this "one touch" latching mechanism, the belt checking cover **60** has a deformable resilient member **61** formed at the other end thereof and defining a locking hole or a locking protrusion. Inside of the second mounting section **32**, there is provided a locking section corresponding to the locking hole or the locking protrusion of the resilient member **61**.

[**0021**] According to the construction as described above, usually, the vacuum cleaner is operated with the second mounting section **32** being closed by the belt checking cover **60** as shown in **FIG. 2**. Then if the brush bar **40** does not completely or smoothly rotate, the second mounting section **32** can be opened simply by opening the belt checking cover **60** for the purpose of checking the driving force transmission belt **50**. Accordingly, it is possible to check for the contamination or the condition of the driving force transmission belt **50**. Unlike the conventional vacuum cleaner in which a lower portion is required to be separated for a check on the condition of the driving force transmission belt **50**, the suction brush according to the present invention has an advantage since the lower portion of the suction brush is not separated for the checking operation.

[**0022**] Meanwhile, although this embodiment described the belt checking cover **60** pivotably connected to the brush bar cover **35**, it is just by way of example, and accordingly any proper variations are possible. For example, it is possible that the belt checking cover **60** be directly connected to the suction brush body **30**.

[**0023**] According to the suction brush for the upright type vacuum cleaner as constructed above, by providing the suction brush body **30** with the belt checking cover **60** capable of opening and closing the driving force transmission belt **50** for rotating a brush bar **40**, the condition or the contamination of the driving force transmission belt **50** is easily checked.

[**0024**] Accordingly, there is an advantage that the user can easily check the condition of the suction brush for proper operation.

What is claimed:

1. A suction brush for an upright type vacuum cleaner, disposed at a cleaner body to move along a surface to be cleaned, for drawing in contaminants from the cleaning surface by a suction force generated from a motor driving chamber disposed at a lower portion of the cleaner body, the suction brush comprising:

a suction brush body;

a brush bar rotatably disposed inside the suction brush body, for brushing the contaminants off from the surface to be cleaned;

a driving force transmission belt disposed inside the suction brush body, for transmitting a rotation force to the brush bar from a motor disposed in the motor driving chamber; and

a belt checking cover disposed at a lower portion of the suction brush body to check the condition and contamination of the driving force transmission belt.

2. The suction brush of claim 1, wherein the belt checking cover is pivotably hinged on a brush bar cover disposed at a lower portion of the suction brush body for covering the brush bar and having an opening port formed therein through which the brush bar may be exposed.

3. The suction brush of claim 1, wherein the suction brush is rotatably disposed at the cleaner body.

4. The suction brush of claim 1, wherein the entire length of the driving force transmission belt is accessible when the belt checking cover is removed.

5. The suction brush of claim 1, wherein the drive transmission belt is disposed within a belt mounting section of the cleaner body, separate from a brush mounting section, the belt mounting section being covered by the belt checking cover.

* * * * *