No. 722,592. PATENTED MAR. 10, 1903.

B. V. KOSTKA.

SIGN LETTER.

APPLICATION FILED MAR. 29, 1902.

NO MODEL.

Fig. 1.

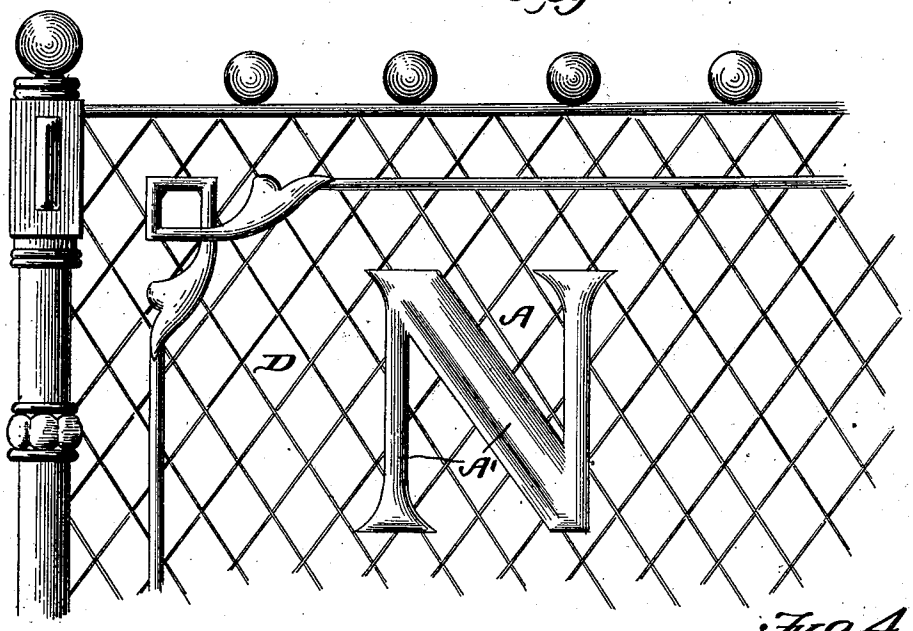

Fig. 2.

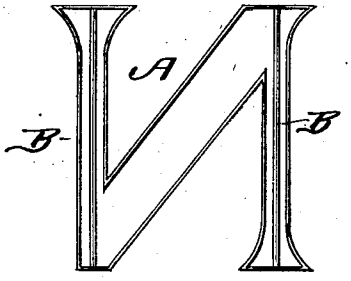

Fig. 3.

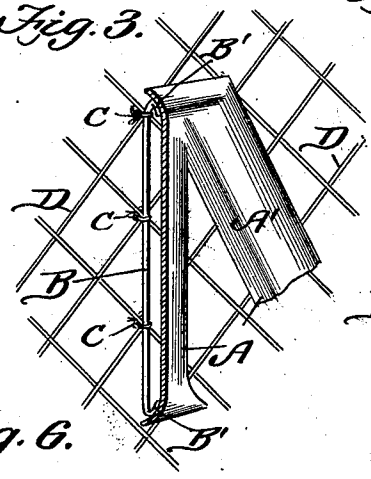

Fig. 4.

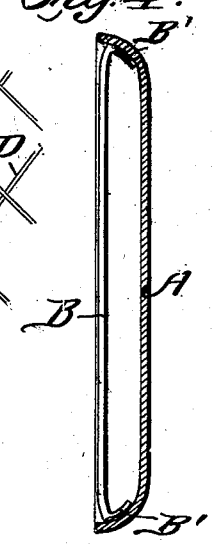

Fig. 5

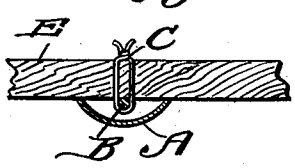

Fig. 6.

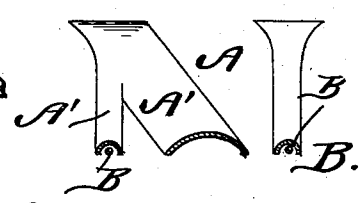

Inventor

B. V. Kostka.

Witnesses

M. D. Blondel

Clarence Traw

By Omeara & Brock

Attorneys

THE NORRIS PETERS CO., PHOTO-LITHO., WASHINGTON, D. C.

UNITED STATES PATENT OFFICE.

BOHUMIL V. KOSTKA, OF NEW YORK, N. Y.

SIGN-LETTER.

SPECIFICATION forming part of Letters Patent No. 722,592, dated March 10, 1903.

Application filed March 29, 1902. Serial No. 100,582. (No model.)

To all whom it may concern:

Be it known that I, BOHUMIL V. KOSTKA, a citizen of the United States, residing at New York, in the State of New York, have invented a new and useful Improvement in Sign-Letters, of which the following is a specification.

This invention relates generally to signs, and more particularly to a sign-letter, the object being to provide a gilt-enameled letter which shall be strong, light, and durable, one which can be quickly and easily attached to and detached from the sign board or base, one which can be attached to either a wire, wood, or glass base, and one which will produce a highly artistic effect.

With these various objects in view the invention consists, essentially, in providing a sheet-metal letter, preferably of concavo-convex form, the convex side being gilded or otherwise coated, the concave or hollow side having a bar arranged therein and to which the fastening-wires are connected.

The invention consists also in certain details of construction hereinafter fully described, and pointed out in the claims.

In the drawings forming part of this specification, Figure 1 is a view showing in elevation a portion of a sign constructed in accordance with my invention. Fig. 2 is a rear view of a sign-letter constructed in accordance with my invention. Fig. 3 is a detail view, partly in perspective and partly in section, illustrating the practical application of my invention. Fig. 4 is a vertical sectional view taken through one member of a letter constructed in accordance with my invention. Fig. 5 is a horizontal sectional view taken through one member and illustrating the manner of securing the sign-letter to a wooden base. Fig. 6 is a detail view, partly in section and partly in perspective, illustrating the peculiar formation of the letters.

Heretofore in making gold signs the letters have usually been made of wood and gilded, said letters being secured to the wire-screen base by means of staples driven into the rear face of the letters. This method of construction is objectionable, for the reason that the staples often split the wood owing to the cross-grain of the wood, and, furthermore, the letters work loose from the staples. Another objection to the wooden letter is its great weight.

In carrying out my invention I employ a metal letter A, which is preferably constructed from a thin piece of sheet copper into the desired pattern and is preferably made concavo-convex in form, which is more clearly illustrated in the drawings, and the convex side A′ is coated with a suitable gilding and burned, thereby imparting a highly ornamental and artistic finish to the letter. A rod or bar B is attached to one or more members of the letter upon its concave or hollow side, said rod or bar having its ends bent in, as shown at B′, and attached to the inner face of the letter, as most clearly shown in Figs. 3 and 4, and it will be noted that this rod or bar rests entirely within the said hollow face or side of the letter.

C indicates the fastening-wires, which are twisted around the rod or bar B and around the wire-network base D, as shown in Figs. 1 and 3, or they may be passed through the wooden base E, as indicated in Fig. 5.

By having the rod or bar B entirely within the hollow face of the letter the edges of the letter are brought firmly against the base, when the said letters are fastened to the base by means of the wires C. If it is desired to attach the letters to a glass base, small holes can be drilled through the glass, or cement may be employed.

A letter constructed as herein shown and described is more durable than the gilded wooden letters now in common use, is lighter, and can be attached and detached more quickly.

Having thus fully described my invention, what I claim as new, and desire to secure by Letters Patent, is—

1. In a sign, the combination with a net-wire base, a sign-letter having a concaved rear face, bars extending across said concaved portion and adjacent the plane of the edges of the letters and means for securing said bars to the wire-network.

2. In a sign, the combination with a wire-network base, letters having concaved rear faces, bars lying within said concaved portions and extending from the top to the bottom of the letters and adapted to bear against the wires of the base.

BOHUMIL V. KOSTKA.

Witnesses:
OTTO BRAZOLA,
JOSEPH TLASKAL.