Nov. 19, 1968 C. W. HATTON 3,412,363

CONTROL KNOB INDICATOR APPARATUS

Filed Jan. 2, 1964 2 Sheets-Sheet 1

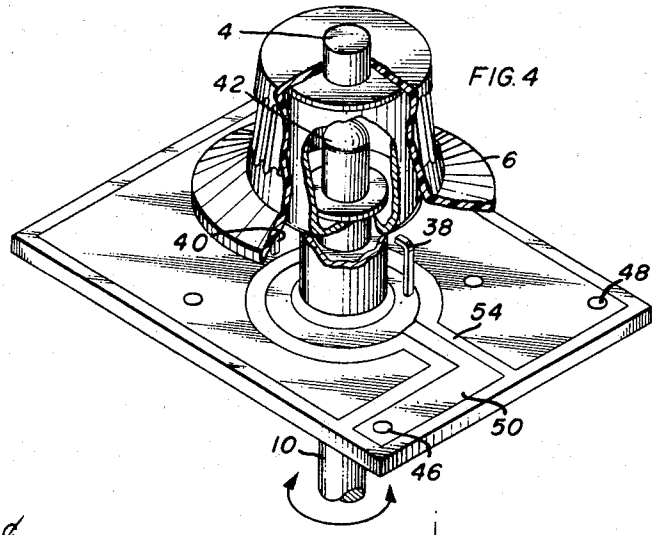

FIG. 4

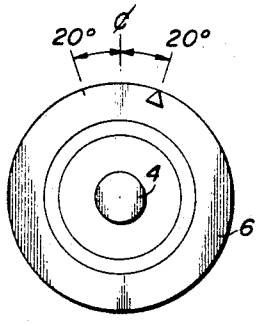

FIG. 3A

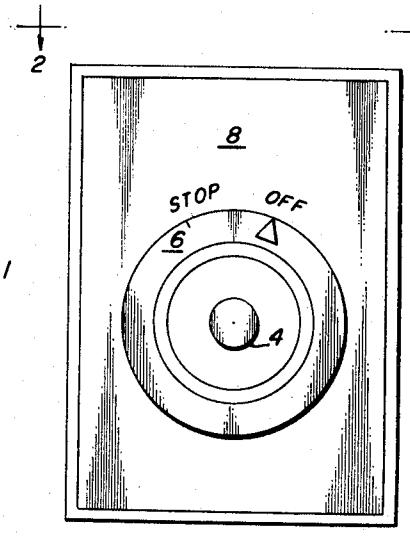

FIG. 1

FIG. 5

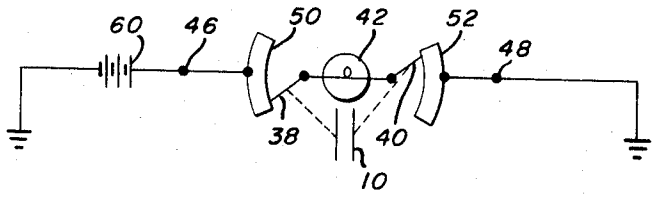

INVENTOR.
CHARLES WILLIAM HATTON

Nov. 19, 1968 C. W. HATTON 3,412,363

CONTROL KNOB INDICATOR APPARATUS

Filed Jan. 2, 1964 2 Sheets-Sheet 2

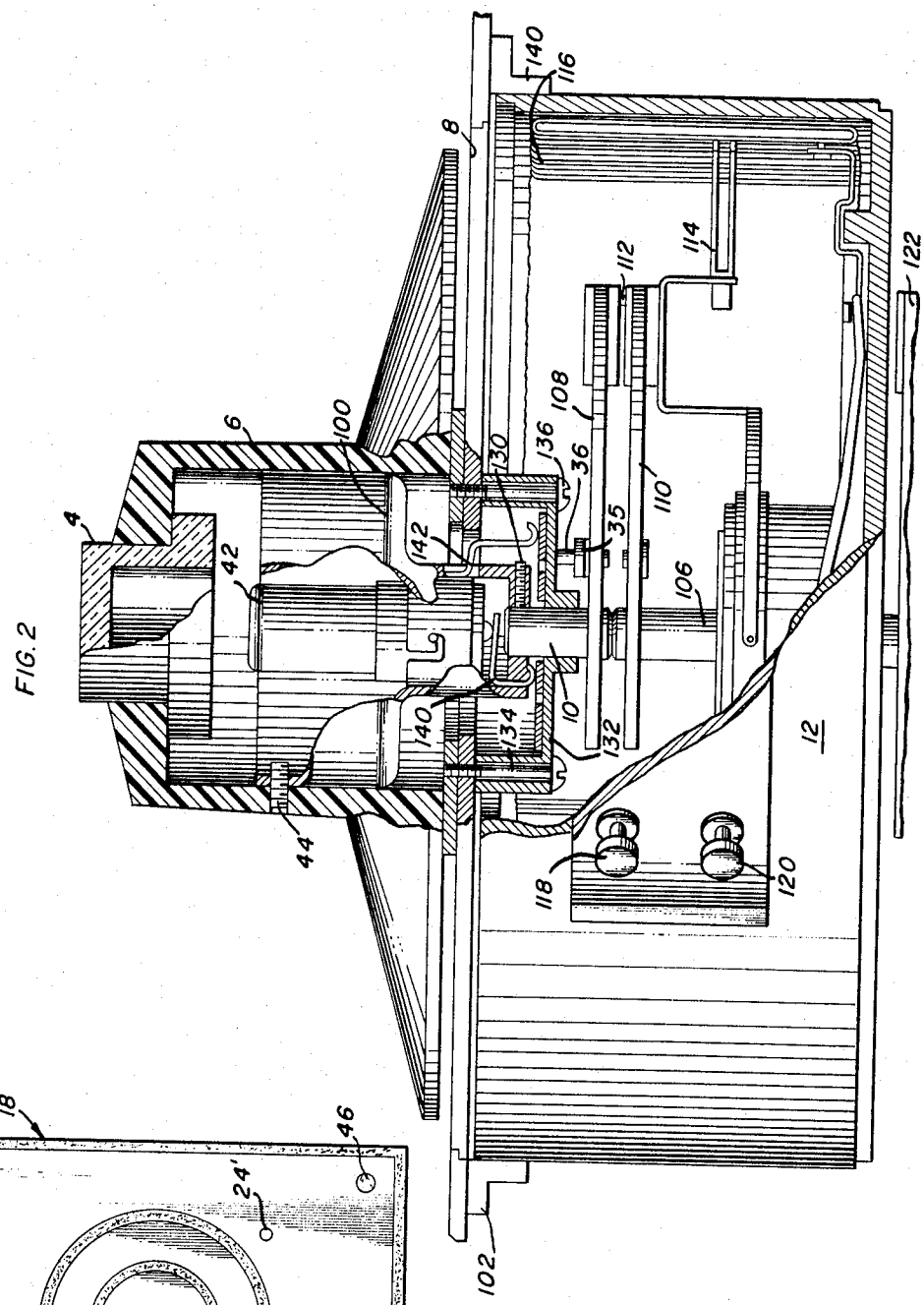

FIG. 2

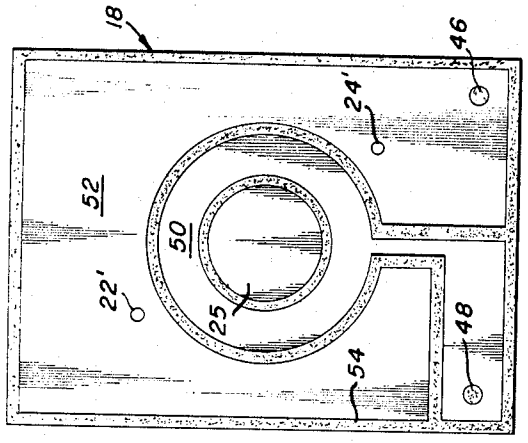

FIG. 3

INVENTOR.
CHARLES WILLIAM HATTON

United States Patent Office

3,412,363

Patented Nov. 19, 1968

3,412,363

CONTROL KNOB INDICATOR APPARATUS

Charles William Hatton, Binghamton, N.Y., assignor to General Precision Systems Inc., a corporation of Delaware

Filed Jan. 2, 1964, Ser. No. 335,327
3 Claims. (Cl. 338—196)

ABSTRACT OF THE DISCLOSURE

A variable resistor has an actuating control knob with a light indicating means for indicating the operating condition of the resistor. A printed circuit module is provided with a conductive area and a nonconductive area and alternatively, a second conductive area or resistive area. One wiper on the knob coacts with the conductive area and a second wiper coacts with the nonconductive area in the off position and the second conductive area or resistive area in the on position. In one case the indicator operates in an off and full intensity condition and in another case operates in an off with an increasing intensity condition as the second wiper advances along the resistive area.

This invention relates to a control knob indicator apparatus and more particularly to an improved control knob indicator apparatus operable to provide both a device effective to permit positioning of manually adjustable shafts and to visually indicate, or signal, the position of such shafts.

It has long been necessary that in order to implement and expedite the immensely complex functions provided by the majority of present day large scale electrical devices, it is frequently required that a great number of operator controlled knobs be positioned on one or more control panels, to allow the operator to adjust switches, potentiometers, and similar electrical components. This is readily apparent from a cursory glance of the control panels that form a part of digital and analog computers and aircraft cockpits, by way of example.

However, as a result of the fact that various and different conditions must be controlled, it is frequently necessary to mount a large number of such control knobs on a single panel, in order to attain the advantages afforded by the electrical device. In accordance with this requirement, together with space limitations, many control knobs must be mounted closely adjacent each other. Further, each control knob, generally, must be limited in size in order that the control panel accommodate the required number of knobs.

When a large number of control knobs are provided for a single operator, it often becomes difficult, or even impossible for the operator to remember which of the knobs has been properly adjusted, and how each knob relates to a desired condition if it has been adjusted. Because prompt operator adjustment of selected ones of the control knobs is sometimes crucial to the safe and/or efficient control of the machine, process, or aircraft, it has been common practice to provide an indicating light adjacent each control knob in order to aid the operator in determining both the character of the condition which a knob controls, and whether or not it has been adjusted to a given position or positions.

Generally, in typical applications, such lights have been controlled by switches mounted behind the panel, with the switches being operated either directly by the shafts themselves, or by mechanical devices such as cams or the like associated with the shafts.

In applications where many rows and columns of control knobs are installed on a single panel together with adjacent indicating lights, it is sometimes difficult for an

operator to discern whether a specific light pertains to a knob positioned above, below, or alongside the light, which obviously results in an inordinate delay of the operator's positioning of the correct control knob, or even in the operator's manipulation of the wrong control knob. Further, if the associated lights and knobs are arranged on the panel so that a given light is always appreciably located nearer its associated knob, it requires that an appreciable portion of the available panel space be wasted, in order to accomplish such spacing. In addition to the difficulty of associating an individual light with an individual control knob, such prior art arrangements have included the disadvantage that each separate indicating light requires additional wiring behind the panel as well as an additional mounting hole through the panel.

According to the invention, however, there is provided a control knob indicator apparatus effective to overcome each of the above briefly-described disadvantages of the prior art, and, further, provides control knob identification and condition-monitoring, of the controlled shaft in a manner which, first, consumes a minimum amount of panel space; second, is simple and economical to install and use; and, third, allows unmistakable association between corresponding control knobs and indicator lights. In general, potentiometers, switches, and similar components intended for panel mounting are usually constructed with a forwardly-extending shaft, which protrudes through a panel hole when the component is secured against the back of the panel, to which a control knob is affixed. In the present invention, however, the shaft which extends through the panel is an integral part of the control knob indicator apparatus itself rather than the switch or potentiometer assembly, and, further, these components have shafts of reduced length which do not extend through the panel.

Briefly described, the control knob of the present invention includes an indicating lamp concentrically mounted within the knob itself, in order to minimize the required panel space, together with a shaft constructed integrally with the knob and extending both through the control panel and a planar electric circuit, such as a switch means, connected to a source of electric potential and effective to operate the indicating lamp in a predetermined manner in accordance with the rotational position of the shaft. Although, the end of the shaft can be connected to the operating shaft of conventional potentiometers or switches, it is generally preferred that concentrically mounted potentiometers and switches used in instrument and simulator servomechanisms provide a control knob indicator apparatus that is compact and utilizes a minimum of control panel surface area.

Yet another object of the invention is to provide a control knob indicator apparatus operable to denote the amount of rotation of an associated shaft.

The invention accordingly comprises the features of construction, combination of elements, and arrangement of parts, which will be exemplified in the construction hereinafter set forth, and the scope of the invention will be indicated in the claims.

For a fuller understanding of the nature and objects of the invention reference should be had to the following detailed description taken in connection with the accompanying drawings, in which:

FIG. 1 illustrates an embodiment of the control knob indicator apparatus of the invention installed on a control panel.

FIG. 2 is an elevational view of the structure shown in FIG. 1, viewed as indicated by lines 2—2 and having an exterior enclosure partially broken away to reveal interior details.

FIG. 3 illustrates a printed circuit module useful with the embodiment of the invention shown in FIG. 1.

FIG. 3A is a diagrammatic illustration of the positioning of the control knob indicator apparatus of the invention with respect to the location of a stop.

FIG. 4 is an exploded view, with several parts broken away, of another embodiment of the control knob indicator apparatus according to the invention.

FIG. 5 is an electrical schematic diagram illustrating an electrical circuit employed in the embodiment including the printed circuit module shown in FIG. 3.

Referring now to the drawings, FIG. 1 shows a control knob **6** which includes a centrally located integral translucent member **4** mounted on a control panel **8**.

The control knob indicator apparatus illustrated in FIG. 1, is an elementary embodiment of the apparatus attached to a switch means, but it will be understood as the description proceeds that other and more complex controls may be attached to the apparatus of the invention.

As shown in FIG. 2, control knob **6** is fastened to an inner housing **100** which protrudes through a control panel **8**, housing **100** providing support for an internal shaft **10**.

Also secured to panel **8** by means of a pair of angle brackets **102** and **104**, is a potentiometer **12** having a recessed internal shaft **106**. Coupling is provided between shafts **10** and **106** by a pair of arms **108** and **110**, engaged by a cooperating pin member **112**, in order that rotation of shaft **10**, under control of knob **6**, will be imparted to shaft **106**. In the conventional manner, rotation of shaft **106** is effective to position a potentiometer wiper arm **114** in contact with a selected region of winding **116**, wiper arm **114** being electrically connected to one or more of the external terminals indicated as **118** and **120**. Although a potentiometer has been chosen in order to best illustrate this embodiment of the invention, it should be understood that various other electrical devices having a shaft, the position of which is to be controlled, can be substituted therefor. It should also be noted that a series of "gang" of similarly constructed potentiometers are also controllable by knob **6**, as indicated by an arm **122**, it merely being necessary to employ a further arm secured to the succeeding potentiometers and a clamping device to secure the potentiometers one to another.

Considering now specifically the control knob indicator apparatus as shown in the embodiment illustrated in FIG. **1**, knob **6** is fastened to internal housing **100** by a set screw **44**, the lower portion of housing **100** additionally being secured to shaft **10** by another set screw **130**. A housing support for shaft **10** is provided by a bearing member **132** secured to control panel **8** by a pair of bolts **134** and **136**. It should be now understood that rotation of knob **6** imparts rotary motion to housing **100** which in turn rotates shaft **10**, the rotary motion supplied to shaft **10** being thereafter coupled to shaft **106** through arms **108** and **110**, and cooperating pin **112**. Further, it should be noted that axial displacement of shaft **10** is prevented through the interaction of arm **108** and bearing member **132**.

Additionally a pair of terminals **140** and **142**, insulatively secured to shaft **10**, are positioned to electrically coact with a printed circuit module **18**, supported within bearing member **132**. Another pair of electrodes attached to lamp **42**, replaceably positioned in the extremity of shaft **10**, is covered by a translucent insert.

An elementary printed circuit module **18**, capable of being utilized in the present invention, is shown in FIGURE 3. Module **18** has two terminals **46** and **48** each of which is electrically associated with distinct portions **50** and **52** of the module **18**. Each section, **50** and **52**, is coated with a very low resistive material, such as a thin film of solder or copper; thus, module **18**, having only two distinct conductive regions, is very similar to an "on-off" switch. The portions **54** of the card **18** between sections **50** and **52** are composed of an electrically non-conductive material, i.e., a phenolic or the like, and when control knob **6** is placed in the position, such that terminal **40**, contacts non-conductive portion **54** of module **18**, located intermediate sections **50** and **52**, light **42** is not illuminated, indicating an "off" position, as will be explained in detail hereinafter.

As shown in FIG. 3A, if a mechanical stop **36**, is positioned such that selector knob **6** is prevented by plunger **35**, attached to arm **108**, from moving in a forty degree sector at the top of selector knob **6**, shaft **10** is orientated such that terminal **40** is in contact with non-conductive portion **54**, creating an open circuit between sections **50** and **52**, lamp **42**, indicator **4**, are not illuminated, representing that the potentiometer is at its null or off position. As selector knob **6** is rotated, positioning the wiper arm of potentiometer **12** on the windings thereof, terminal **40** is moved into engagement with conductive area **52**, completing an electrical circuit through lamp **42**, in which one of terminals **46** or **48** is connected to a voltage source **60**, as shown in FIG. 5, and the other terminal is connected to ground, thereby illuminating lamp **42**. A voltage source **60** is connected to terminal **46** associated with section **50** of module **18**. Terminal **48**, which is connected to section **52** of module **18**, is connected to ground. As explained hereinbefore, terminals **140** and **142**, which are mechanically coupled to shaft **10**, electrically coact with the respective conductive sections **50** and **52** of module **18** and the electrodes of lamp **42**. Thus, as shaft **10** is rotated, lamp **42** remains illuminated as long as terminals **140** and **142** are simultaneously in contact with sections **50** and **52** of module **18**. Should contact **40** be so positioned such that it is not in contact with its associated conductive section **52**, lamp **42** is deenergized.

It is evident, and this is an important feature of the invention, that module **18** is capable of assuming many diverse electrical configurations, such that the indicator apparatus may be utilized efficiently and effectively with any typical potentiometer or switch. It is also obvious that if variations in light intensity, or indications, are desired for the type potentiometer being utilized, all that is necessary is to replace the printed circuit module with another module with the preferred design. For example, variations may be made in the thickness of the deposit of the conductive film and films having different resistive portions may be used. Thus, it is seen that an integral, compact and inexpensive indicator is achieved which utilizes the minimum amount of panel area and a minimum amount of peripheral electrical equipment.

I claim:

1. A control knob assembly comprising:

a bearing member having a planar portion containing an aperture;

a control shaft journalled in said aperture with its longitudinal axis substantially perpendicular to said planar portion;

a printed circuit module removably disposed on said planar portion of the bearing member in circumscribing relation to said aperture and having on its uppermost surface a printed circuit pattern defined by electrically conductive and nonconductive regions;

a hollow control knob, at least partially translucent, fixedly disposed on one end of said shaft and on that side of said planar portion on which is disposed said printed circuit module, the other end of said shaft being adapted to be coupled to an adjustable device to be controlled by said knob;

lamp means operatively mounted within said hollow knob; and

electrical contact means, connected to said lamp means, extending through the knob and into sliding contact with the electrically conductive and nonconductive regions of said printed circuit pattern, the conductive regions of said pattern completing an electrical circuit to energize said lamp means from a power source at the particular rotative positions where the electrical contact means is in contact with only the conductive regions.

2. A control knob assembly according to claim 1 wherein said conductive regions of the printed circuit pattern vary in resistivity with angular position about said shaft, whereby the magnitude of current flow through said lamp means from the power source is a function of the angular position of said knob.

3. A control knob assembly comprising:

a bearing member, adapted to be secured to the back of a control panel, having a planar portion substantially parallel to a control panel and containing a central aperture;

a control shaft journaled in said aperture with its longitudinal axis substantially perpendicular to said planar portion;

a control knob having a hollow cylindrical hub portion open at one end and having a translucent closure at the other end;

a stepped, hollow cylindrical sleeve member open at its larger end, said larger end fitting into and being fixed in the open end of said knob hub portion to define therein an enclosed compartment, the smaller diameter end of the sleeve, coaxial with the larger end, terminating in an end wall containing a coaxial opening in which is snugly received and fixed one end of said control shaft;

lamp means mounted in said compartment;

electrical contact means, operatively connected to supply electrical current to said lamp means, extending through said sleeve at the small diameter end and terminating, adjacent said planar portion of the bearing member, in terminal portions adapted for sliding contact with a surface; and

a planar circuit module removably secured in position on said planar portion of the bearing member and having, on its uppermost surface, in position to be contacted by the terminal portions of said contact means, a circuit pattern defined by electrically conductive and nonconductive regions.

References Cited

UNITED STATES PATENTS

2,512,880	6/1950	Russell.
2,744,185	5/1956	Cawley.
2,457,920	1/1949	Rider.
2,543,228	2/1951	Burgess.

RICHARD M. WOOD, *Primary Examiner.*

J. G. SMITH, *Assistant Examiner.*