May 13, 1930. E. C. MORGAN 1,758,198

LOADING MACHINE

Original Filed April 29, 1918 13 Sheets-Sheet 1

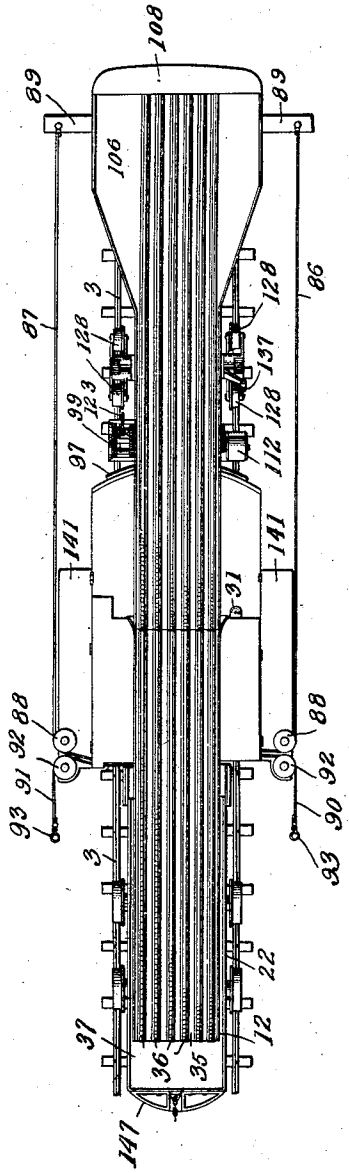

Fig. 1.

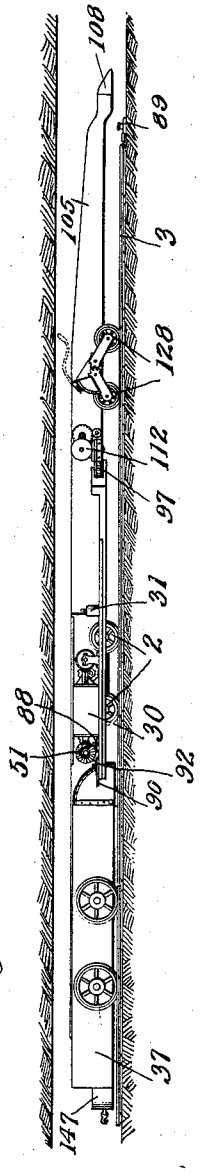

Fig. 2.

Inventor
Edmund C. Morgan

Witness:
Robert F. Beck

By Attorney
Brown & Mason

May 13, 1930. E. C. MORGAN 1,758,198

LOADING MACHINE

Original Filed April 29, 1918 13 Sheets-Sheet 2

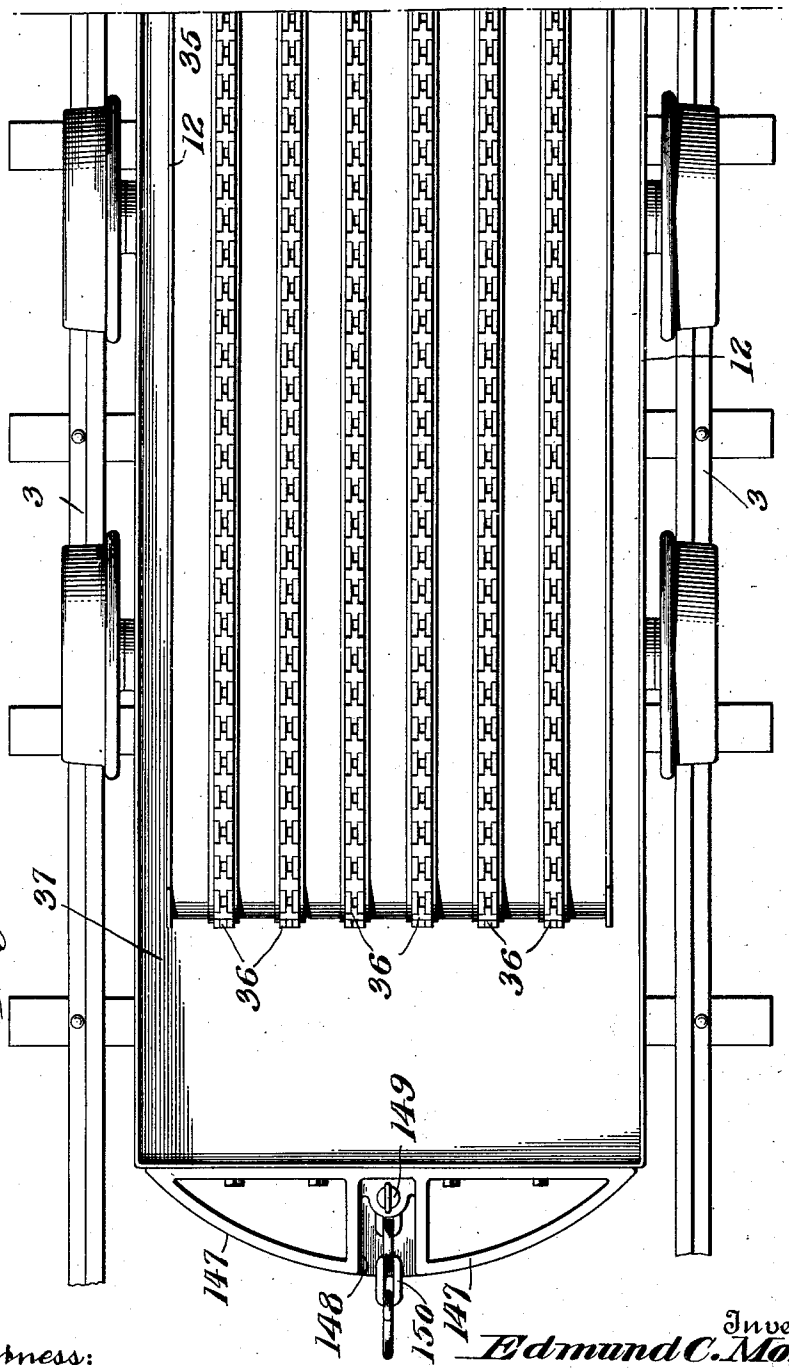

Fig. 3.

Witness:
Robert F. Beck

Inventor
Edmund C. Morgan,

By Attorney
Brown & Dixon

May 13, 1930. E. C. MORGAN 1,758,198

LOADING MACHINE

Original Filed April 29, 1918 13 Sheets-Sheet 3

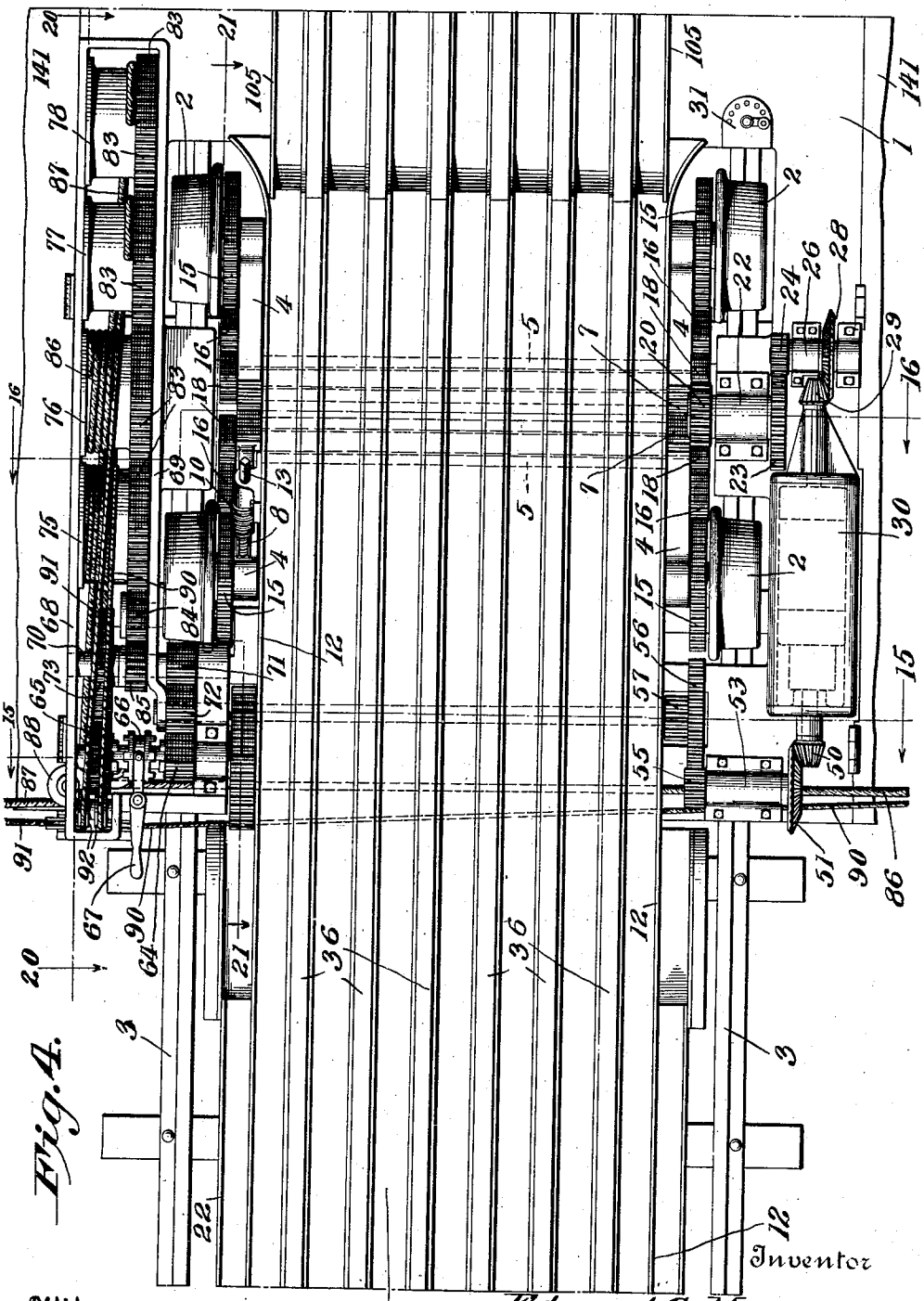

Fig. 4.

Witness:
Robert F. Beck

Inventor
Edmund C. Morgan,
By Attorney

May 13, 1930. E. C. MORGAN 1,758,198

LOADING MACHINE

Original Filed April 29, 1918 13 Sheets-Sheet 4

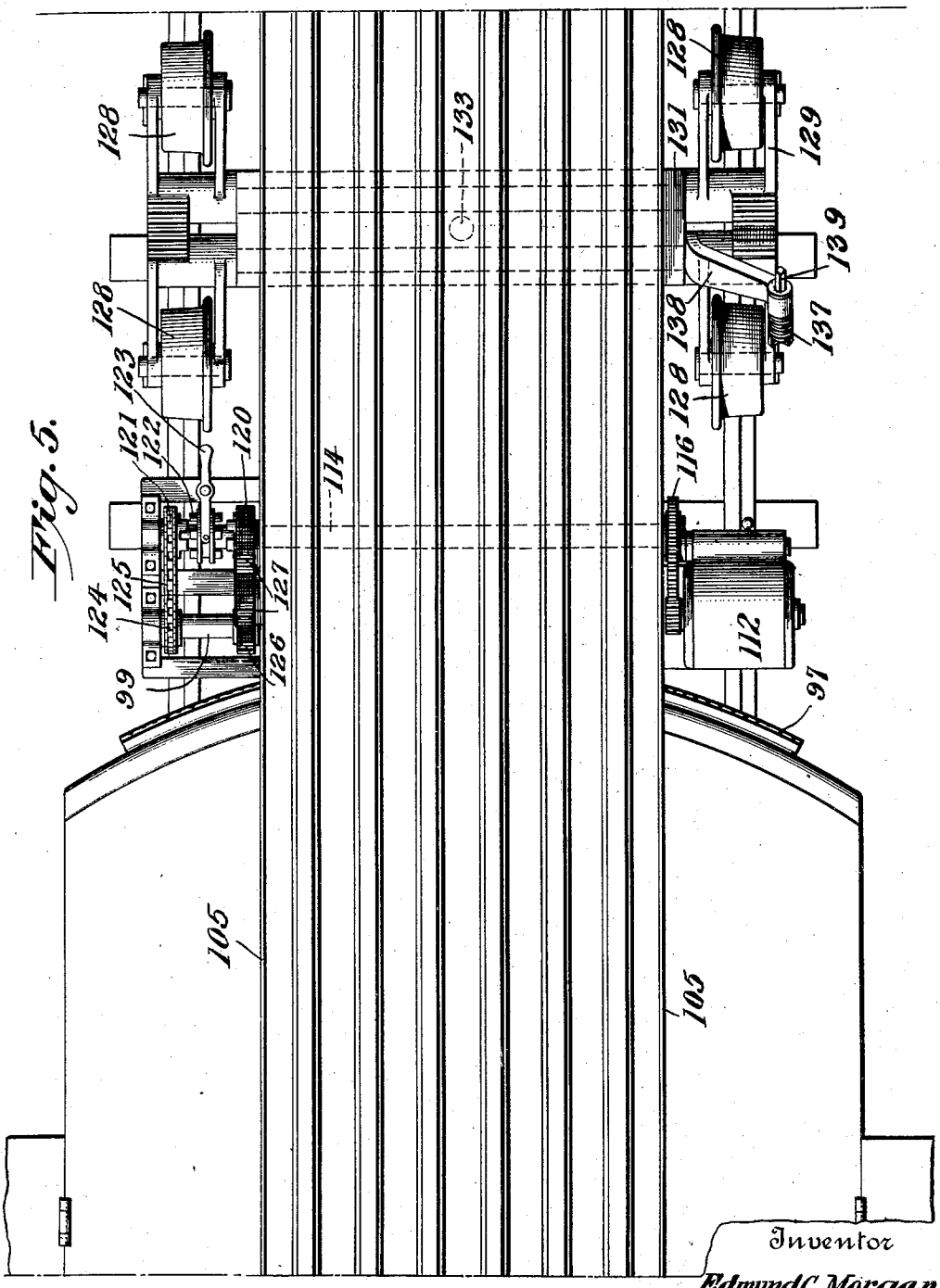

Fig. 5.

Inventor
Edmund C. Morgan

Witness:
Robert F. Beck

By Attorney
Brown & Nissen

May 13, 1930. E. C. MORGAN 1,758,198

LOADING MACHINE

Original Filed April 29, 1918 13 Sheets-Sheet 5

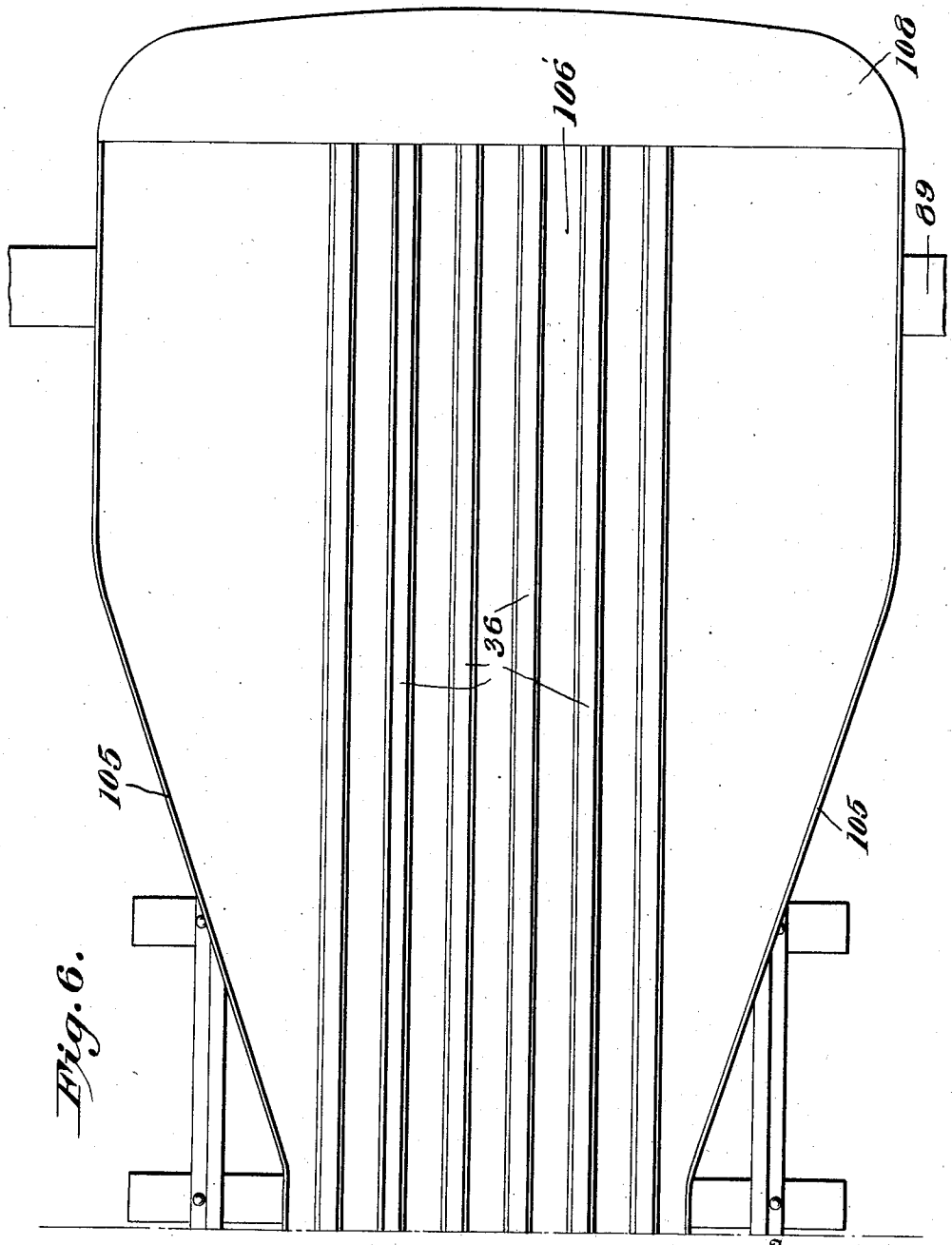

Fig. 6.

Witness
Robert F. Beck

Inventor
Edmund C. Morgan

By Attorney
Brown & Wilson

May 13, 1930. E. C. MORGAN 1,758,198

LOADING MACHINE

Original Filed April 29, 1918 13 Sheets-Sheet 6

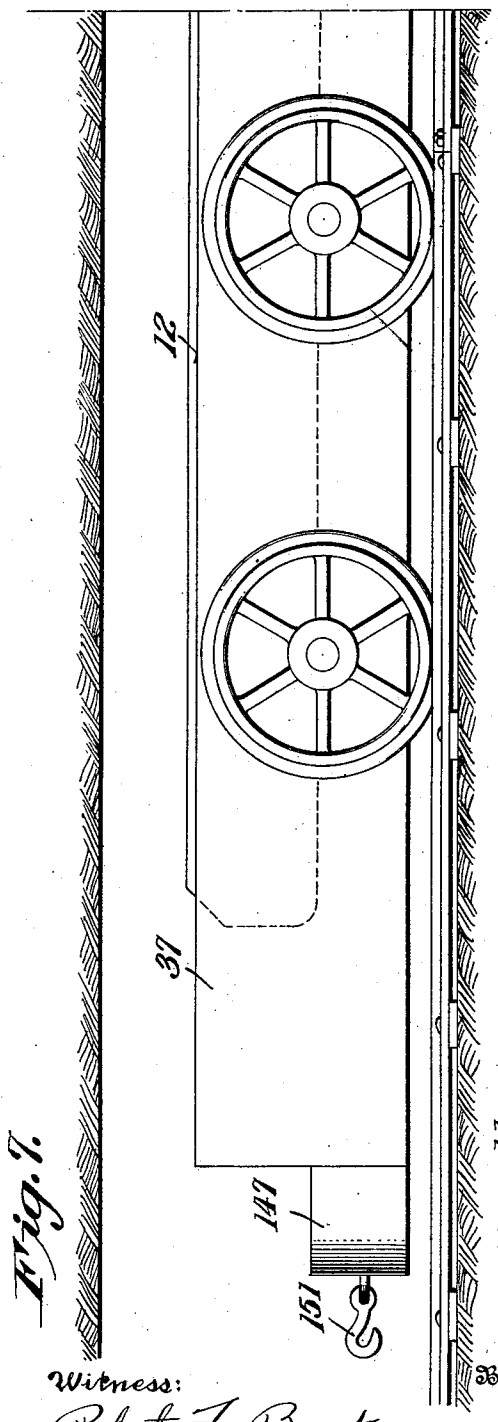

Fig. 7.

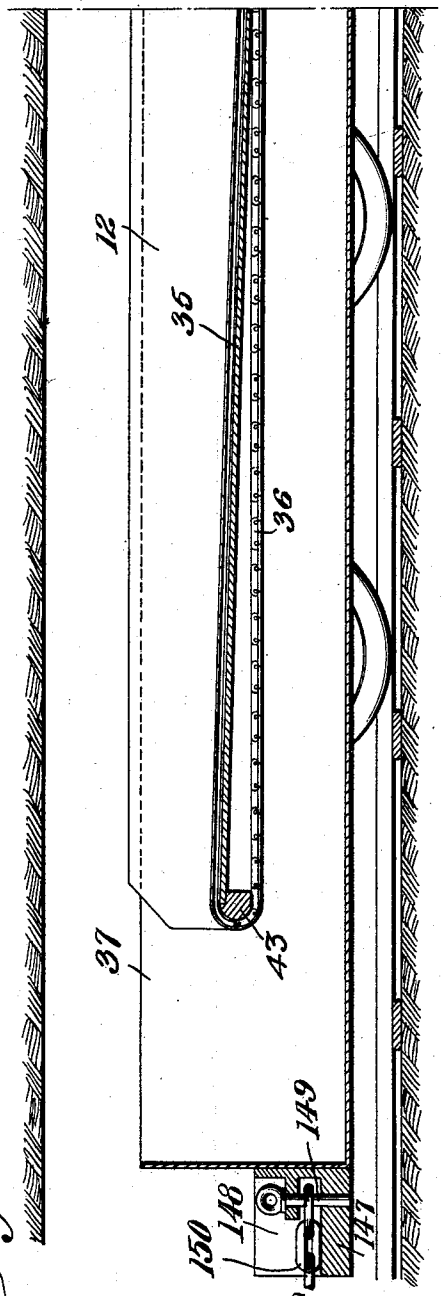

Fig. 11.

Witness:
Robert F. Beck

Inventor
Edmund C. Morgan,
By
Attorney
Brown & Brown

May 13, 1930. E. C. MORGAN 1,758,198

LOADING MACHINE

Original Filed April 29, 1918 13 Sheets-Sheet 7

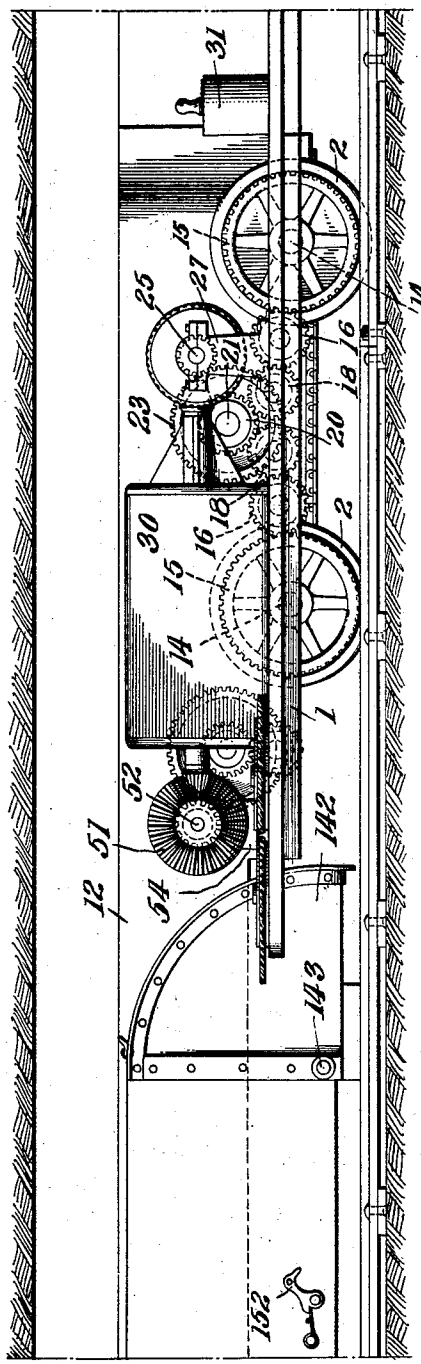

Fig. 8.

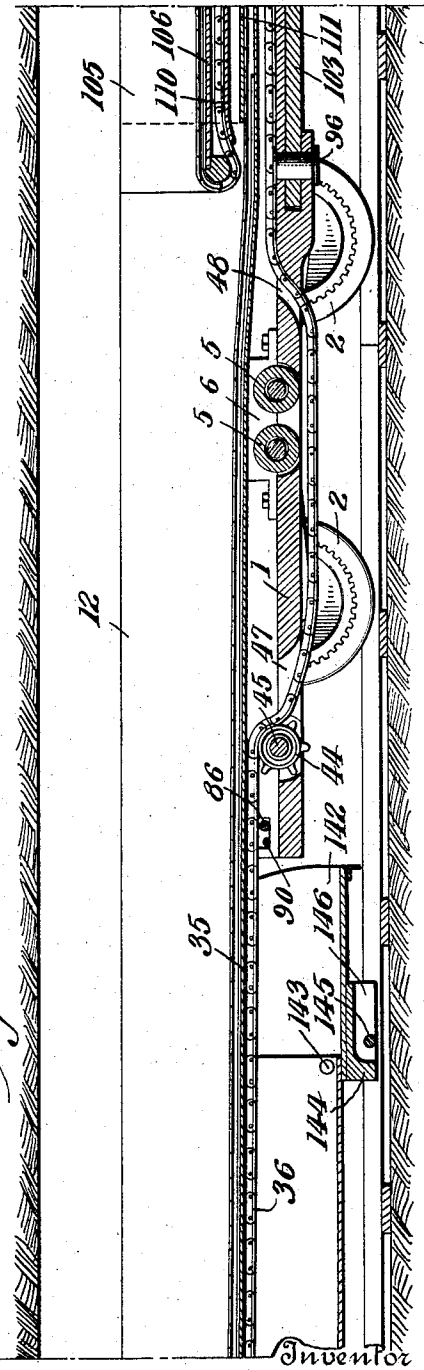

Fig. 12.

Inventor
Edmund C. Morgan,
By Attorney
Brown & Nissen

Witness:
Robert F. Beck

May 13, 1930. E. C. MORGAN 1,758,198

LOADING MACHINE

Original Filed April 29, 1918 13 Sheets-Sheet 8

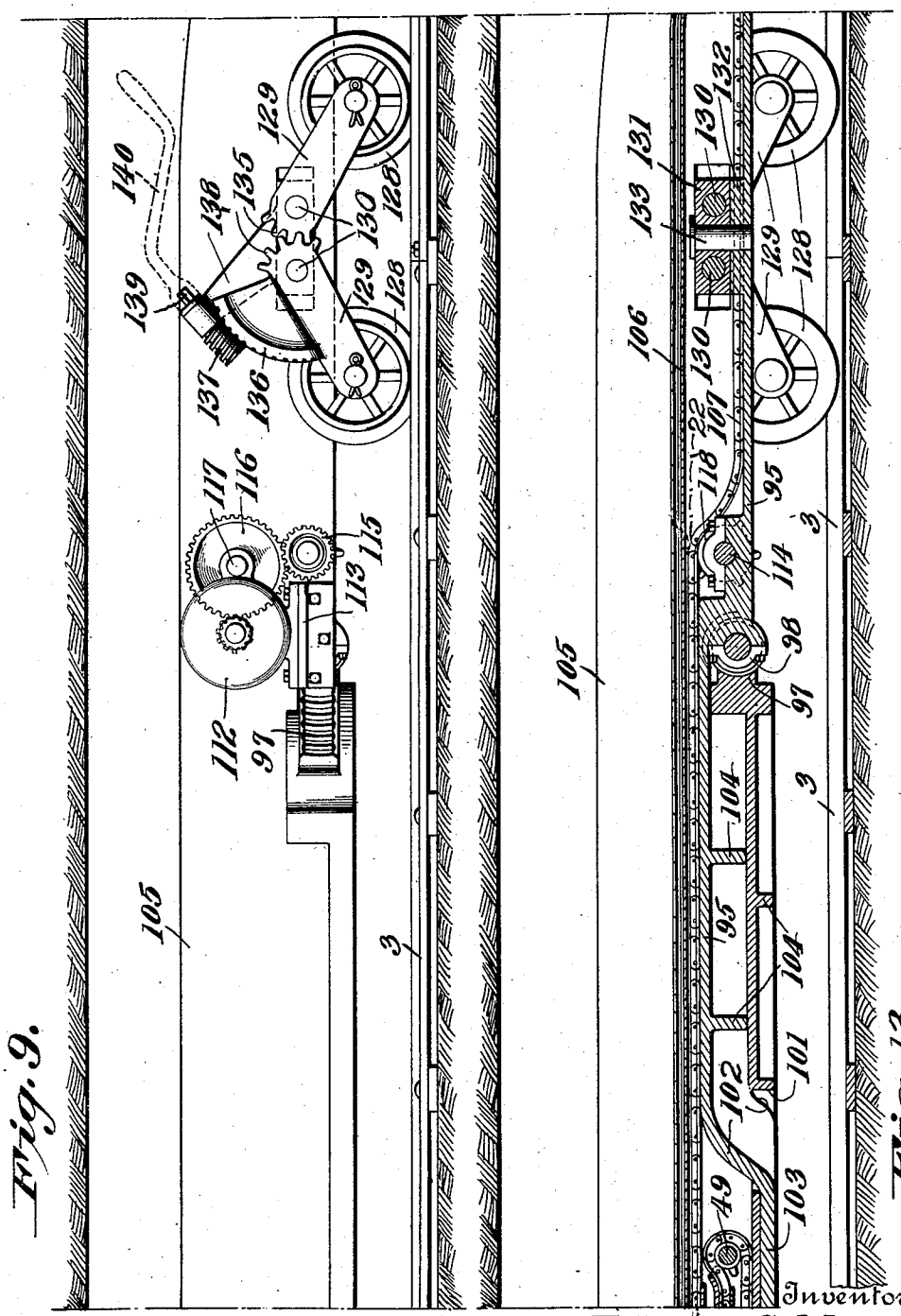

Fig. 9.

Fig. 13.

Witness:
Robert F. Beck

By

Inventor
Edmund C. Morgan

Attorney
Brown & Wessen

May 13, 1930. E. C. MORGAN 1,758,198

LOADING MACHINE

Original Filed April 29, 1918 13 Sheets-Sheet 9

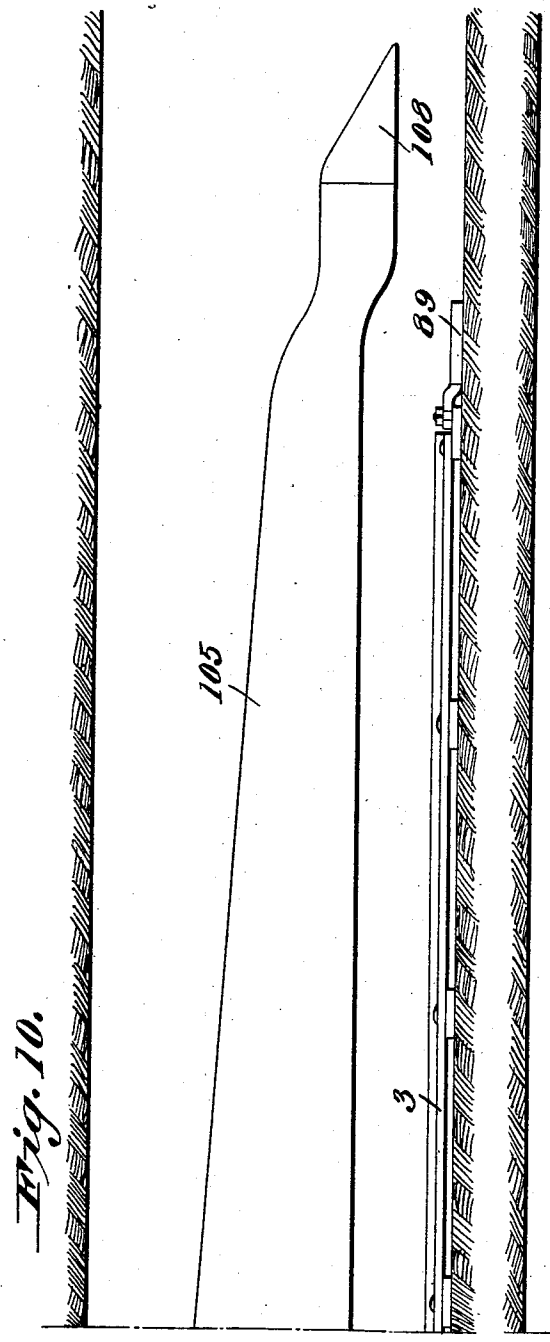

Fig. 10.

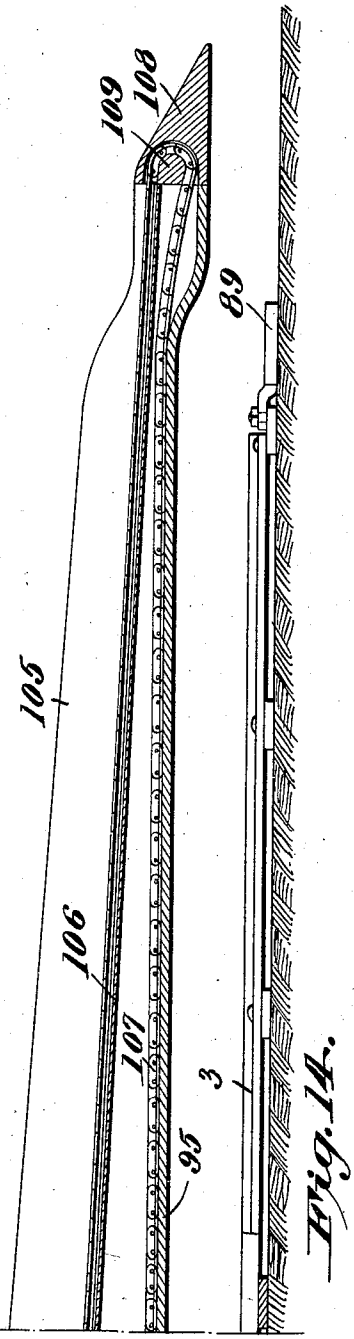

Fig. 14.

Inventor
Edmund C. Morgan

Witness
Robert F. Beck

By Attorney

May 13, 1930. E. C. MORGAN 1,758,198

LOADING MACHINE

Original Filed April 29, 1918 13 Sheets-Sheet 10

Fig. 15.

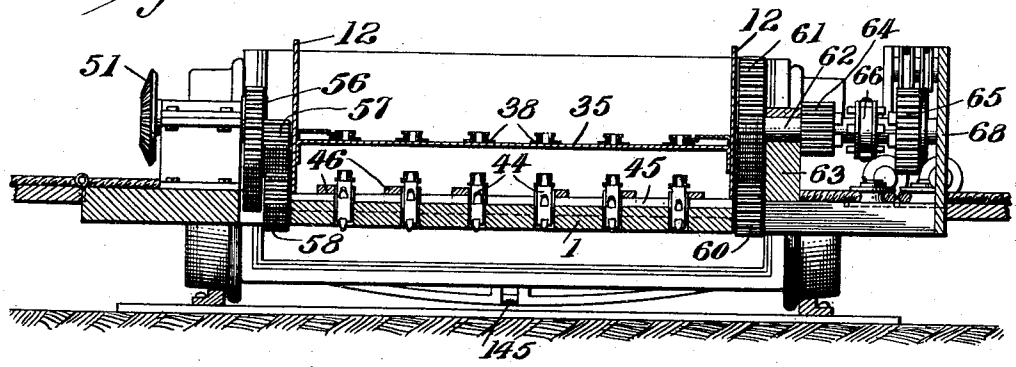

Fig. 16.

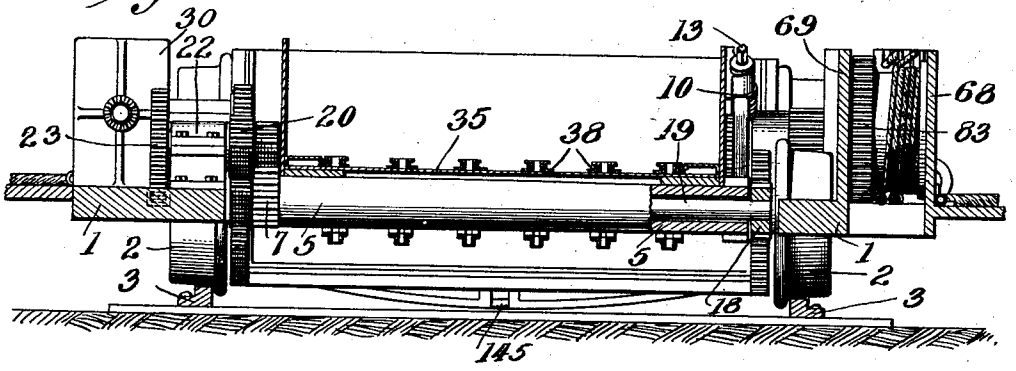

Fig. 17

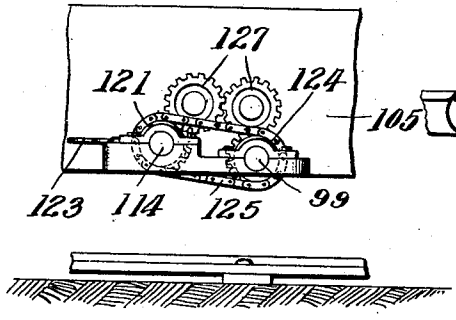

Fig. 18.

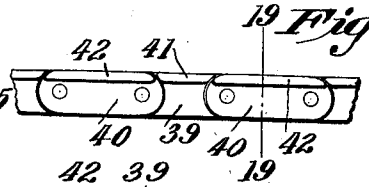

Fig. 19.

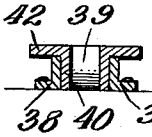

Inventor

Edmund C. Morgan,

By Attorney

Witness:

Robert F. Beck

May 13, 1930. E. C. MORGAN 1,758,198

LOADING MACHINE

Original Filed April 29, 1918 13 Sheets-Sheet 11

Fig. 20.

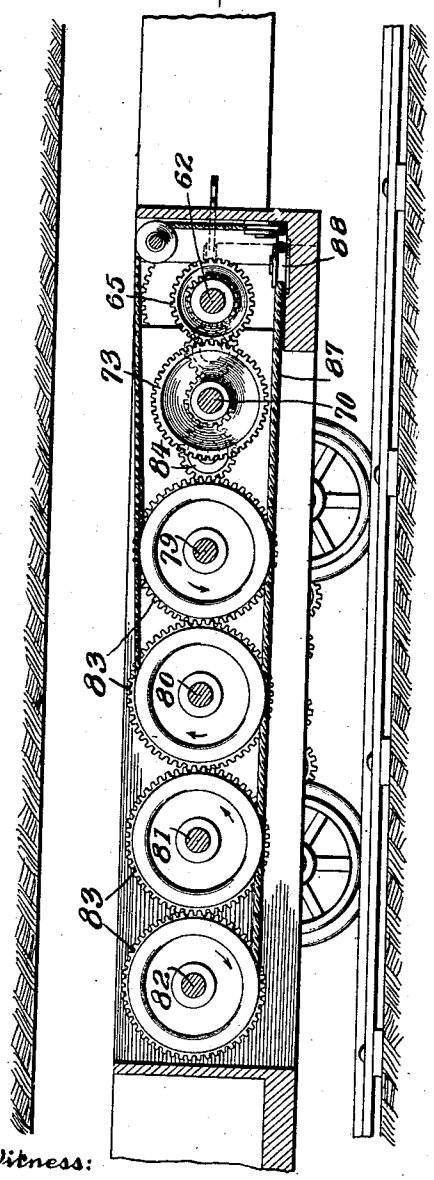

Fig. 21.

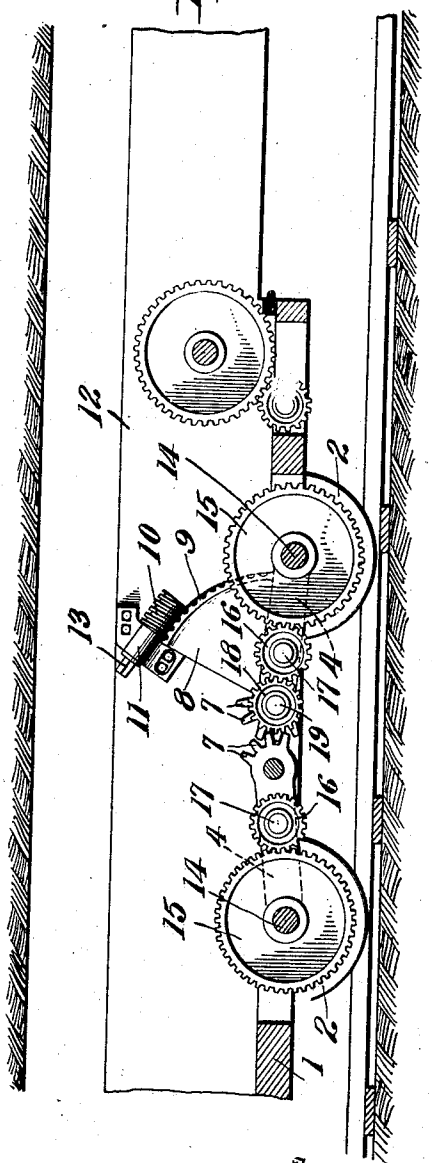

Witness:

Robert F. Beck

Inventor

Edmund C. Morgan,

By

Attorney

Brown & Brown

May 13, 1930. E. C. MORGAN 1,758,198

LOADING MACHINE

Original Filed April 29, 1918 13 Sheets-Sheet 12

Fig. 22.

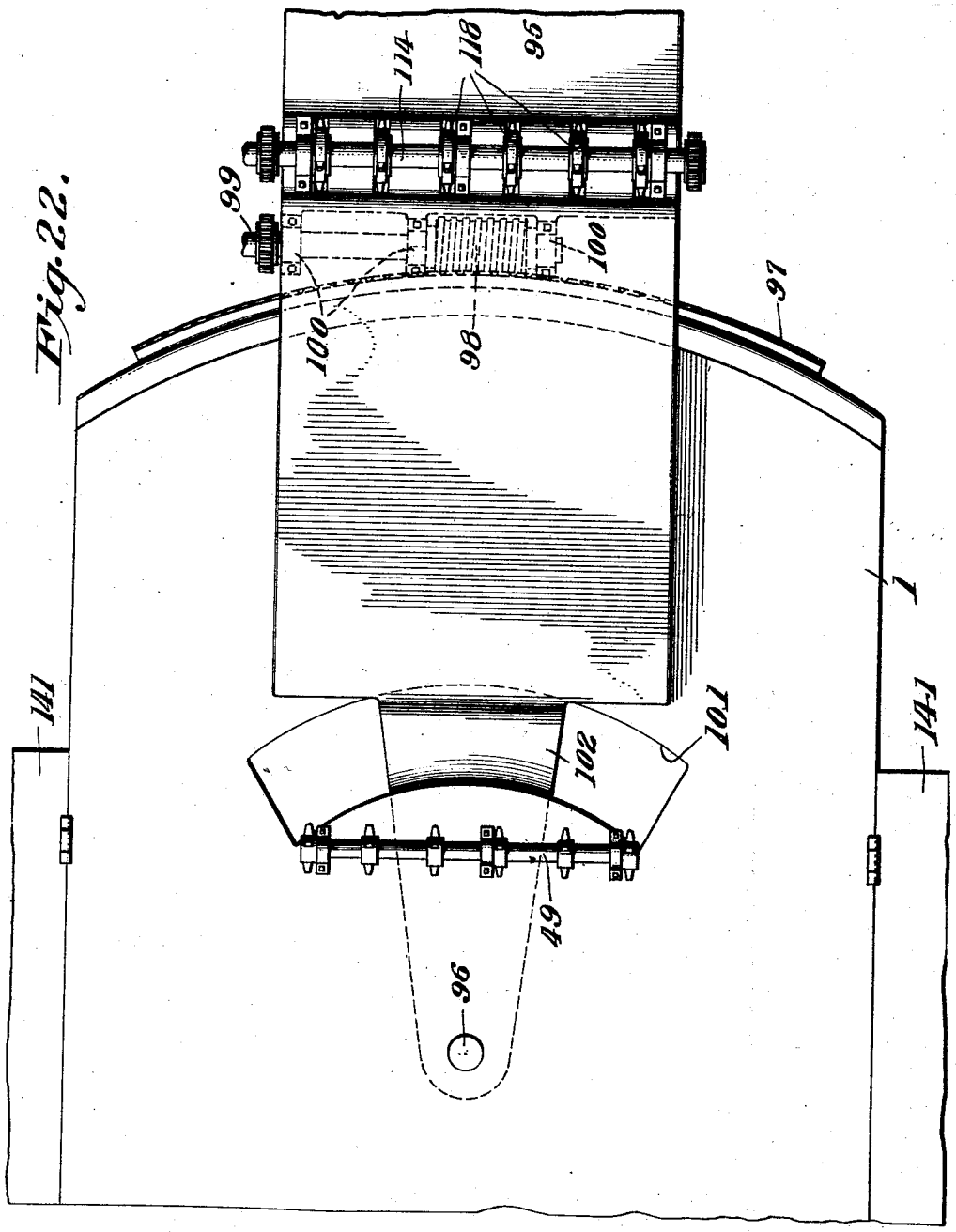

Witness:
Robert F. Beck

Inventor
Edmund C. Morgan,
By Attorney
Brown & Wilson

May 13, 1930. E. C. MORGAN 1,758,198

LOADING MACHINE

Original Filed April 29, 1918 13 Sheets-Sheet 13

Fig. 23.

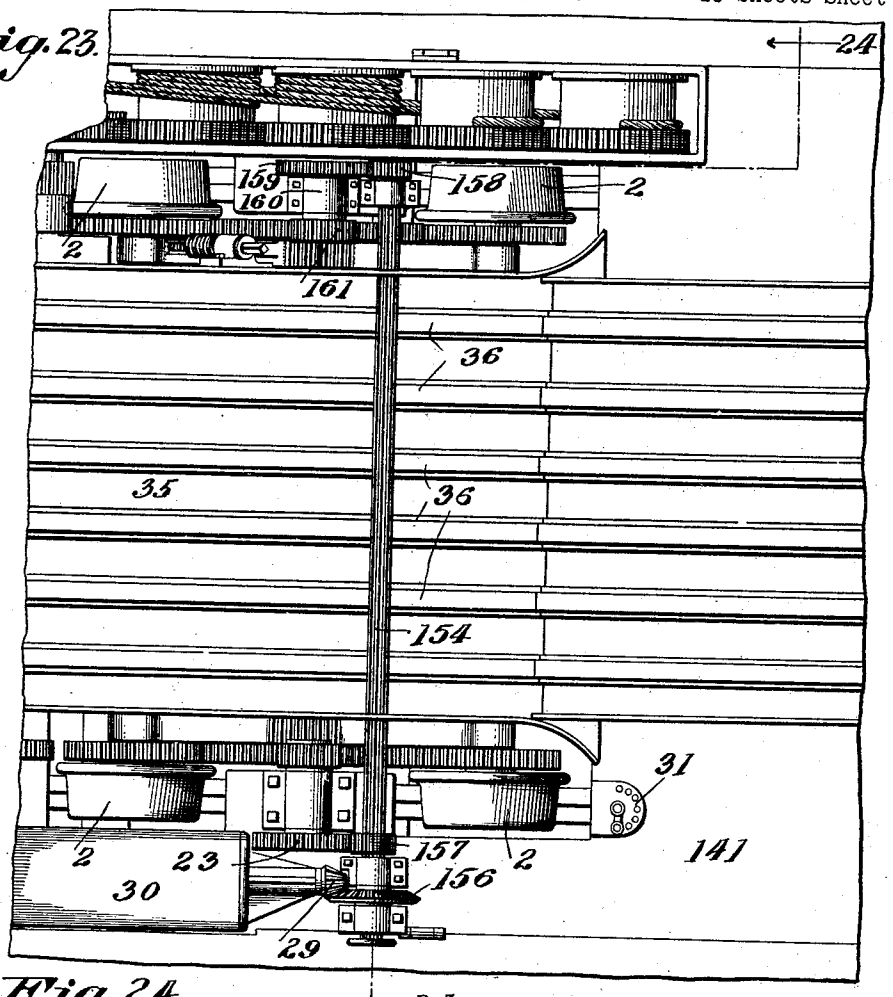

Fig. 24.

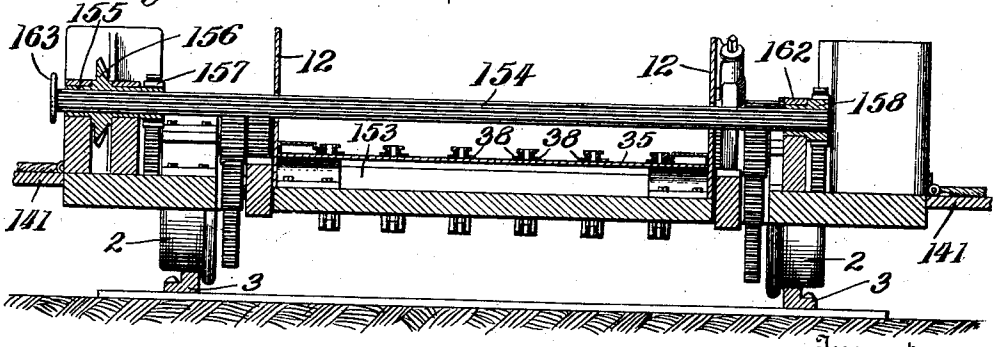

Inventor

Edmund C. Morgan,

Witness:

Robert F. Beck

By Attorney

Brown & Risen

Patented May 13, 1930 1,758,198

UNITED STATES PATENT OFFICE

EDMUND C. MORGAN, OF NEW YORK, N. Y.; OLIVE EUGENIE MORGAN EXECUTRIX OF SAID EDMUND C. MORGAN, DECEASED

LOADING MACHINE

Application filed April 29, 1918. Serial No. 231,353. Renewed December 28, 1928.

This invention relates to machines for loading coal and other material and has for its object the provision of a device of the class named which shall be of improved construction and operation.

The invention is exemplified in the combination and arrangement of parts shown in the accompanying drawings and described in the following specification, and it is more particularly pointed out in the appended claims.

In the drawings—

Fig. 1 is a top plan view of the loading machine showing one embodiment of the present invention.

Fig. 2 is a vertical section through a mine chamber showing the loading machine of Fig. 1 in side elevation in place in the chamber.

Figs. 3, 4, 5 and 6 together constitute a top plan view of the machine shown in Fig. 1 but on a larger scale.

Figs. 7, 8, 9 and 10 together constitute a side elevation of the machine shown in Figs. 3, 4, 5 and 6.

Figs. 11, 12, 13 and 14 together constitute a central longitudinal section of the machine shown in Figs. 3, 4, 5 and 6.

Fig. 15 is a transverse vertical section on line 15—15 of Fig. 4.

Fig. 16 is a vertical section on line 16—16 of Fig. 4.

Fig. 17 is a fragmentary detail.

Fig. 18 is a side elevation of a portion of a conveyer chain used on the machine.

Fig. 19 is a section on line 19—19 of Fig 18 showing also the guides for the chain.

Fig. 20 is a vertical section substantially on line 20—20 of Fig. 4.

Fig. 21 is a vertical section substantially on line 21—21 of Fig. 4.

Fig. 22 is a sectional plan view substantially on line 22—22 of Fig. 13.

Fig. 23 is a fragmentary plan view of a portion of a loading machine showing a slight modification of a part of the gearing.

Fig. 24 is a vertical section substantially on line 24—24 of Fig. 23.

The embodiment of the present invention shown in the drawings is one that is especially adapted for work in very low mine veins, and the machine shown is provided with a heavy plate 1 which constitutes the main supporting frame of the machine. The frame plate 1 is carried by wheels 2 which are preferably designed for travel upon track rails shown at 3. In order that the frame plate 1 and the mechanism carried thereby may be raised and lowered relative to the track on which the wheels 2 travel, the wheels are journaled at the outer ends of arms 4, shown best in Figs. 4 and 21. The arms 4 are rigidly carried at the ends of hollow shafts 5 which extend transversely across the machine and are journaled in bearings 6 carried by the frame plate 1. The inner ends of the arms 4, at each side of the machine, are provided with gear teeth 7 arranged so that the teeth of each arm intermesh with the teeth of its mate, so that if one arm is moved upwardly or downwardly about the axis of its shaft 5, the other arm will be given a corresponding movement and since the arms at the opposite ends of each shaft 5 are rigidly connected by their shaft, the arms at the opposite sides of the machine are constrained to move in unison with one another. For the purpose of rocking the arms 4 together with their truck wheels 2 vertically upon the hollow shafts 5, one of the arms 4, as shown in Figs. 4 and 21, is provided with a segment 8 provided with rack teeth 9 arranged to mesh with a worm 10 journaled in a bearing 11 rigidly secured to one of a pair of side plates 12 which project upwardly from the main base plate 1. The spindle for the worm 10 is provided with a squared end 13 for receiving a socket wrench or other instrument by which the worm may be rotated to swing the arms 4 vertically and thus raise or lower the truck wheels 2 relatively to the frame of the machine. Each arm 4 is provided at its outer end with a stud shaft 14 on which the truck wheels 2 are journaled, and each wheel 2 is provided adjacent its inner face and rigidly secured thereto with a spur gear 15 by means of which the wheels 2 are rotated to propel the machine upon the track 3. Each gear 15 is driven by an idler 16 which is loosely

journaled on a stud shaft 17 carried by the outer face of the arm 4, and each idler 16 meshes with a pinion 18 secured to one end of a shaft 19 which extends through the hollow central portion of one of the shafts 5 and is journaled for rotation within the hollow shaft, as shown in Fig. 16. The pinions 18, at one side of the machine, as shown in Fig. 4, mesh with a gear 20 which is rigid with a shaft 21 (see also Fig. 8) journaled in a bearing 22 carried by the frame plate 1. The end of shaft 21 opposite the gear 20 carries a larger gear 23 which meshes with a pinion 24 secured to the end of a shaft 25 journaled in a bearing 26 at the upper end of a pedestal 27 also carried by the frame plate 1. The shaft 25 is provided with a bevel gear 28 which meshes with a pinion 29 which is driven by a motor located within a casing 30 mounted upon the upper face of the plate 1. By this arrangement the track wheels 2 may be rotated by the motor in the casing 30 and thus the machine may be propelled along the track rails 3. The wheels 2 may be shifted vertically relatively to the frame plate 1 to raise and lower the machine relative to the track and the wheels will remain in driving relation with the motor for all positions of vertical adjustment of the machine frame. A controller 31 is provided for regulating the motor in the casing 30.

The side plates 12 extend rearwardly, as shown in Figs. 3, 4, 7, 8, 11 and 12, and are connected near their lower edges but above the union between the side plates and the base plate 1, by a bed plate 35 which forms a runway over which a plurality of conveyer chains 36 travel to transfer the material to be loaded to the rear end of the trough formed by the side plates 12 and bed plate 35, and to discharge the material from the end of the runway thus formed into a car, or other receptacle, shown at 37 in the drawings. The conveyer chains 36 are guided along the upper surface of the bed plate 35 by angle bars 38 secured to the upper surface of the plate, as shown in Figs. 15, 16 and 19. The chains 36 are made up of single links 39 and double links 40, and these links are provided with laterally extending flanges 41 and 42, respectively, at their upper edges for the purpose of engaging the material and for transporting it along the bed plate 35. The rear end of the bed plate 35 is supported by a cross bar 43 about which the chains 36 travel so that the chains return beneath the bed plate 35, the return runs of the chains passing about sprocket wheels 44 secured to a shaft 45 journaled on the upper surface of the base plate 1 in bearings 46, as shown in Figs. 12 and 15. After the chains 36 have engaged the sprocket wheels 44, they pass through slots 47 in the base plate 1 and travel beneath the base plate to a point beyond the hollow shafts 5 where they return to the upper side of the base plate through openings 48. At their forward ends the conveyer chains 36 pass about an idle shaft 49 and thence return on their active run along the upper surface of the bed plate 35. For driving the chains 36, the shaft 45 is rotated by mechanism best shown in Figs. 4, 8 and 15. A bevel pinion 50 driven by a second motor within the motor casing 30 meshes with a bevel gear 51 secured to a shaft 52 journaled in a bearing 53 carried at the upper end of a pedestal 54. The end of the shaft 52 opposite the gear 51 carries a pinion 55 meshing with a gear 56 which has a pinion 57 rigid therewith arranged to mesh with pinion 58 on the end of the shaft 45. In this way the shaft 45 is driven from the motor pinion 50 and the conveyer chains 36 are thus made to travel over the bed plate 35 to transfer material to the rear end of the loading machine and discharge it into the car 37.

Movement of the machine upon the track rails 3 by means of the propelling mechanism connected to the wheels 2 may be controlled by the controller 31 connected to the electric motor 30. The principal function of this propelling mechanism is to transport the machine from one place to another in the mine chamber, but it should be understood that when the material being loaded is light and in loose piles this propelling mechanism alone may be sufficient to ram the scoop 105, 108 into the material so that the conveyer chains may move the material into the car 37. When coal is to be loaded, however, in a mine chamber, particularly after it has been blasted down and remains partially or wholly in a semi-solid mass, it is preferred to impart a more positive and powerful movement over limited distances upon the track to cause the scoop to be rammed into the material to be loaded and this more powerful reciprocating movement is secured by the mechanism operated from the shaft as shown in Figs. 4, 15, 16 and 20.

At the end of the shaft 45 opposite the pinion 58 the shaft carries a second pinion 60 which meshes with a gear 61 carried on a shaft 62 journaled in a pedestal 63 extending upwardly from the base plate 1. The shaft 62 has two gears 64 and 65 mounted to rotate thereon, but each may be alternately secured to the shaft to rotate therewith by means of a clutch 66 operated by a handle 67. A pair of upright parallel plates 68 and 69 are arranged to project upwardly from the base plate 1 and a short shaft 70 parallel with the shaft 62 is journaled in bearings in these plates, as shown in Fig. 4. The shaft 70 is provided with a pinion 71 which is geared to the pinion 64 through an intermediate idler 72. A gear 73 also secured to the shaft 70 meshes directly with the gear 65 on the shaft 62. By this arrangement when the clutch 66 meshes with the pinion 64, the shaft 70 will be rotated in one

direction at a speed substantially the same as the speed of the shaft 62. When, however, the clutch 66 engages the gear 65, the shaft 70 will be rotated in an opposite direction at a considerably slower speed but with a correspondingly more powerful torque. A series of drums 75, 76, 77 and 78 are journaled on shafts 79, 80, 81 and 82, respectively, extending between the plates 68 and 69, and these drums are provided with intermeshing gears 83 rigid with their respective drums and by means of which the drums are rotated. One of the gears 83 meshes with an idler 84 which in turn is driven by a pinion 85 secured to the shaft 70. A pair of heavy cables 86 and 87 are secured to the drums 76 and 78, respectively, and are guided about suitable sheaves 88 to the front of the machine, as shown in Fig. 1. The ends of the cables 86 and 87 may be fastened to an anchor bar 89 located near the front of the machine and secured to the forward end of the track on which the machine travels. When the shaft 70 is driven through the gears 65 and 73, the cables 86 and 87 will be wound upon the drums 76 and 78 and the machine will thus be moved forwardly to engage the material to be loaded. The drums 75 and 77 are provided with smaller cables 90 and 91 which are guided over sheaves 92 to anchors 93, and when the drums are rotated by the gears 64, 71 and 72, the cables 90 and 91 will be wound upon their respective drums to retract the loading machine while the cables 86 and 87 will be correspondingly unwound to permit the backward movement of the machine.

The forward portion of the loading machine is provided with a frame plate 95 which is pivoted at 96 to the main frame plate 1 so that the forward portion of the machine may be swung laterally about the shaft 96. The frame plate 1 extends a considerable distance in front of the pivot 96, and is provided at its forward edge with a worm rack 97 which is engaged by a worm wheel 98 secured to a shaft 99 journaled in bearings 100 on the frame plate 95, as shown in Figs. 13 and 22. The forwardly extending portion of the frame plate 1 is provided with an arcuate slot 101 and the frame plate 95 is bent downwardly, as shown at 102 in Figs. 13 and 22, to form a rearwardly extending tongue 103 which passes through the slot 101 and extends rearwardly beneath the plate 1 into position to engage the pivot pin 96. In this way the plates 1 and 95 are made to interlap with one another so that although they are free to swing about the pivot 96, they are rigidly connected so far as relative vertical movement is concerned. The plate 95 is provided with downwardly extending strengthening ribs 104 and the plate 1 may have similar ribs.

Projecting upwardly at the sides of the frame plate 95 are side plates 105 which are connected by a bed plate 106 placed above the frame plate 95 and forming a support for the upper run of conveyer chains 107 in a manner similar to the support for the rear conveyer chains 36. The plates 95 and 106 are widened at their forward ends, as shown in Fig. 6, and a nose piece 108 is supported at the extreme front edge of the plate 95 in position to be forced into engagement with material to be loaded when the machine is moved forwardly. The chains 107 pass around a bar 109 carried by the nose piece 108 so that the chains are brought into position to travel upon the upper surface of the bed plate 106 in their active run. At its rear end the bed plate 106 extends above the forward portion of the bed plate 35, as shown in Fig. 12, and the side plates 105 pass within the front ends of the side plates 12 which are curved outwardly to permit lateral swinging of the forward conveyer section. A supplemental supporting plate 110 is provided for the support of the return run of the conveyer chains 107 where these chains overlap the forward portion of the chains 36. This portion of the chains 36 is also provided with a cover plate 111.

The nosepiece 108 is in the nature of a plow for digging into and delivering material to the chain conveyers which travel along grooves so as to actually carry the material as well as slide it along the bed plate 106. By referring to Fig. 3 it will be seen that the chains project appreciable distances from the surface of the bed plate and the material which rests on the chains is supported by the latter in the bottoms of the grooves in which they fit. By referring to Figs. 18 and 19 it will be seen that the angle plates 38, 38 are constructed to assist materially in the support of the chains and the material thereon.

As shown in Figs. 1, 2, 10 and 14, the upper surface of the nosepiece or plow 108 is flat and inclined downwardly to co-act with the bottom horizontal surface to form a wedge to engage the material, loosen it and direct it onto the conveyer. When the forward conveyer frame 95 is thrust toward the pile of coal such frame 95 acts as a ram to force the wedge 108 into the coal to direct it onto the conveyer. The forward portion of the frame 95 therefore acts as a scoop by being directed under the material to be loaded so that such material may be supported by the bed plate 106. The laterally flaring extensions 105, as shown in Figs. 1 and 14, may also cooperate with the forward lip 108 of the scoop to direct the dislodged material toward the bed plate 106 where the chains 36 may operate on the scooped up material to transfer the latter rearwardly to the mine car 37.

By reason of the powerful rope gearing the scoop may be rammed into a semi-solid mass of coal broken down or dislodged by blasting and by repeated reciprocations at various elevations such material may be effi-

ciently loaded into the mine car 37. Adjustment of the wheels 128 shown in Fig. 2 permits the lip 108 of the scoop to act along the floor or at various elevations even when the wheels 128 are off the track and in the space in advance thereof.

For driving the chains 107, a motor 112 is provided which is mounted upon a bracket 113 secured to the side plate 105 just in front of the rack 97, as shown in Figs. 5 and 9. The motor 112 drives a shaft 114 which extends across the machine and which is connected with the motor by a pinion 115 and a gear 116 carried by a stud shaft 117. The shaft 114 is provided with a plurality of sprocket wheels 118 which engage the conveyer chains 107, as shown in Fig. 13. In addition to driving the conveyer chains 107, the shaft 114 is used to transmit motion from the motor 112 to the shaft 99. In order that the shaft 99 may be rotated in either direction, reversing mechanism is provided, as shown in Figs. 5 and 17. A pinion 120 and a sprocket wheel 121 are loosely mounted on the end of the shaft 114 and may be alternately secured to the shaft by a clutch 122 operated by a handle 123. The sprocket wheel 121 is connected with a corresponding wheel 124 by a sprocket chain 125 and the pinion 120 is geared to a pinion 126 on the shaft 99 through a pair of idlers 127. By this arrangement the shaft 99 may be rotated in one direction through the sprocket wheel 125 and in the opposite direction through the idlers 127. The clutch may also be placed in an intermediate position so that the motor 112 may be used to drive the conveyer chains without operating the worm 98 to shift the forward end of the machine.

When the machine is being transported over the track rails 3 the forward section is supported by wheels 128 which are journaled on the ends of arms 129 which arms are rigidly secured to the opposite ends of a pair of shafts 130 extending longitudinally through a block 131 in which the shafts are journaled to rotate. The block 131 is pivoted to a projection 132 carried on the frame plate 95, a pin 133 being used to connect the block 131 with the projection 132 at a point midway between the sides of the conveyer. The inner ends of the arms 129 are provided with intermeshing gear teeth 135 so that all four of the wheels 128 will swing upwardly or downwardly in unison with one another relative to the conveyer when the shafts 130 are rotated. One of the arms 129, as shown in Figs. 5 and 9, carries a segmental rack 136 which meshes with a worm 137 journaled in a bracket 138 rigidly secured to the block 131. The worm 137 is provided with a squared end 139 for receiving a socket wrench or crank 140 by means of which the shafts 130 may be rotated to shift the wheels 128 relative to the frame of the machine.

For the convenience of the operator a pair of running boards 141 is hinged to the sides of the machine, as shown in Figs. 1, 4 and 22, and these running boards may be swung upwardly if it is desired to move the machine through a narrow opening, or if for any other reason it is found convenient.

The car 37 which receives the material from the discharge end of the loading machine is provided at its forward end with a downwardly swinging door 142 pivotally connected to the car at 143 and which when open leaves the end of the car free to receive the discharge conveyer of the loading machine, as shown in Figs. 8 and 12. The door 142 has a bar 144 secured to the outer face thereof which extends across the end of the car and acts as a bumper and coupling block by means of which the car is connected with others to form a train. A pin 145 extends across a slot 146 in the bar 144 and receives a hook for connecting the car with others in the train. The opposite end of the car is provided with a bar 147 which forms a complementary coupler for the bar 144 of an adjacent car in a train. The bar 147 is provided with a slot 148 and a removable coupling pin 149 which passes through a link of the coupling chain 150. The chain 150 is provided with a hook 151 for engaging the pin 145 of the coupling bar 144. Any suitable latch such as is shown at 152 may be provided for holding the door 142 in closed position.

In the modification shown in Figs. 23 and 24, the hollow shafts shown at 5 in Figs. 4 and 15 are replaced by solid shafts 153 and power is transmitted from the motor pinion 29 to the opposite side of the frame of the machine by means of a fluted shaft 154 instead of shafts 19 passing through hollow shafts 5 as in the form previously described. The fluted shaft 154 slides through a sleeve 155 which carries a bevel gear 156 in position to mesh with the motor pinion 29. The sleeve 155 is internally fluted to conform to the periphery of the shaft 154 so that when the gear 156 is rotated the shaft will be driven in unison with it. The sleeve 155 carries a pinion 157 which meshes with gear 23 and drives the truck wheels 2 in the manner previously described. At the side of the frame opposite the gear 156 a pinion 158 meshes with a gear 159 secured to a shaft journaled in a bearing 160 and carrying at its opposite end a pinion 161 by means of which the truck wheels 2 on that side of the machine are driven. The pinion 158 is provided with a hollow sleeve 162 internally fluted to fit the periphery of the shaft 154. By this arrangement power may be transmitted across the frame of the machine so that the wheels 2 will be driven in unison on both sides of the frame. This arrangement may be used for propelling the machine from place to place

in the mine and when it is desired to operate the machine for loading purposes the shaft 154 may be withdrawn from within the sleeve 162 by means of a hand piece 163 so that the space between the side plates 12 will not be obstructed by the shaft. Since the wheels 2 are not used for propelling the machine during loading operation, the shaft 154 will not be needed at this time so that it can be withdrawn entirely or drawn back sufficiently to clear the space between the side plates 12 to permit the passage of material along the conveyer frame.

In operation the machine is first driven to the position in a mine chamber where loose material is to be loaded and during the transportation of the machine from place to place it is supported by the truck wheels 2 and 128 at a sufficient height from the floor of the mine chamber to cause the nose piece 108 of the machine to clear the upper part of the track rails over which the machine travels. When the machine is brought into position to load material into cars 37, the wheels 2 and 128 are raised relative to the frame of the machine so that the machine itself is lowered until the nose piece 108 rests upon the floor of the mine chamber in advance of the forward end of the track and adjacent the material to be loaded. The cables are secured to their respective anchors and the conveyer chains are operated to carry material from the front of the machine to the rear. The machine is moved forwardly by the cables 86 and 87 to force the nose piece 108 beneath the material to be loaded which is thus deposited upon the upper surface of the bed plate 106 over which it is carried rearwardly and discharged onto the surface of the plate 35 along which it is carried by the chains 36 to the rear of the machine where it is dumped into the car 37. When the material directly in front of the machine has thus been loaded, the machine is run backwardly by the cables 90 and 91 and the forward pivotal section is swung to one side or the other of the track by means of the worm and rack 97 and 98 and the machine is again advanced to gather the material at the side of its direct path of travel. During the loading operation the forward wheels 128 are raised sufficiently to entirely clear the track rails 3 to permit the front portion of the machine to be swung from one side of the track to the other. The machine at this time is supported by the rear wheels 2 and the front end of the conveyer frame which rests upon the surface of the mine floor. It will be seen that the rear wheels 2 may be shifted relative to the frame so that the entire frame is brought very close to the top of the track rails. This permits operation in very low veins.

I claim:

1. A loading machine comprising a main frame, supporting wheels for said frame movable vertically relative thereto for raising and lowering said frame, a supplemental frame pivotally connected with said main frame for lateral movement relative thereto, and supporting wheels carried by said supplemental frame and movable vertically relative thereto for permitting the forward end of said supplemental frame to be brought into and out of engagement with the surface over which said machine operates.

2. A loading machine comprising a main frame, track wheels for supporting said frame arranged to be moved vertically relative thereto for raising and lowering said frame, a supplemental frame pivotally connected with said main frame to swing laterally relative thereto but held in rigid relation vertically relative to said main frame, wheels on said supplemental frame and movable vertically relative thereto for raising and lowering the forward end of said supplemental frame into and out of engagement with the surface upon which said machine operates, and conveyers carried by said frames for transferring material along said frames.

3. In a loading machine, a frame, a pair of arms pivotally connected with said frame, wheels journaled on said arms, means for moving said arms relative to said frame for raising and lowering said frame, and means for driving said wheels independently of their position relatively to said frame for propelling said frame along the surface upon which it is supported.

4. In a loading machine, a frame, a pair of arms pivotally connected with said frame, means for causing said arms to swing in unison with one another about their pivotal connections with said frame, wheels journaled on said arms, and means for rotating said wheels independently of the position of said arms relative to their pivots for propelling said machine along the surface upon which it is supported.

5. A loading machine comprising a frame, conveyer mechanism carried by said frame arranged to receive material at one end thereof, arms pivotally connected with said frame, means for swinging said arms vertically about their pivotal connection with said frame and for holding said arms in their various positions for adjusting the receiving end of said conveyer relative to the surface upon which said machine operates, means for constraining said arms to move in unison about their pivots, and means for rotating said wheels independently of the position of adjustment of said arms relative to their pivots.

6. In a loading machine, the combination with an elongated conveyer frame open at its forward and rear ends, a conveyer extending along said conveyer frame between the ends thereof, gathering means at the forward end of said conveyer frame, a truck for the

rear portion of said frame, an additional truck for the forward portion of said frame, said additional truck being provided with a plurality of pairs of arms pivotally connected to said frame and to the wheels of said additional truck, and means for shifting said arms about their pivotal connections with said frame to lift and lower said gathering means relative to the surface upon which the same operates.

7. A loading machine comprising an elongated conveyer frame, of a conveyer extending longitudinally thereof, gathering means at the forward end of said frame, a truck for the rear portion of said frame, an additional truck for the forward portion of said frame, means connected between the rear truck and the frame for adjusting the elevation of the latter relative to said truck, and additional mechanism associated with the forward truck to adjust the elevation of the forward portion of the frame and said gathering means independently of the elevating mechanism associated with the rear truck.

8. A loading machine comprising a conveyer frame having one end thereof arranged to receive material to be loaded, two sets of supporting wheels for said frame, mechanism for adjusting said wheels vertically to raise and lower said frame to bring the receiving end of said conveyer into contact with the surface upon which said machine operates and to shift the weight of said frame from the foremost set of said wheels so that the wheels of said set may be raised above said surface, and means for rotating the rearmost set of said wheels for propelling said machine over the surface on which it is supported.

9. A loading machine comprising a conveyer frame having one end thereof arranged to receive material to be loaded, a pair of arms pivotally connected with said frame and having intermeshing gear teeth on adjacent ends thereof, supporting wheels mounted on said arms, means for shifting said arms about their pivots to raise and lower said conveyer frame relative to the surface on which it operates, and means for moving said frame independently of said wheels for forcing the receiving end of said conveyer into engagement with the material to be loaded.

10. A loading machine comprising a conveyer frame, arms pivotally mounted on said frame, wheels carried by said arms for assisting in supporting said frame, gear teeth on the inner ends of said arms for constraining said arms to move in unison with one another, gears concentric with the pivots of said arms having driving connections with said wheels, a motor for rotating said gears for driving said wheels, and means for shifting said arms relative to said frame for raising and lowering said frame.

11. A loading machine comprising a conveyer frame, a hollow shaft extending across said frame, arms rigidly secured to the opposite end of said shaft to swing in unison with one another about the axis of said shaft as a pivot, wheels journaled on said arms adjacent the outer ends thereof, a second shaft extending through said hollow shaft, and gearing operated by said second shaft for driving said wheels.

12. A loading machine comprising a frame, material handling mechanism mounted on said frame, a hollow shaft extending across said frame, an arm rigidly secured to each of the opposite ends of said shaft, supporting wheels journaled adjacent the outer ends of said arms, means for swinging said arms in unison with one another about the axis of said shaft as a pivot to raise and lower said frame, a second shaft extending through the hollow in said first-mentioned shaft, and gearing carried by said arms and having a driving connection with said second shaft for rotating said wheels to propel said machine over the surface upon which it is operated.

13. A loading machine comprising a conveyer frame having one end thereof arranged to receive material to be loaded, a pair of hollow shafts extending across said frame and journaled thereon, an arm rigidly connected with each end of each of said shafts, a supporting wheel journaled adjacent the outer end of each of said arms, means for swinging said arms about the axes of said shafts to raise and lower said conveyor frame to bring the receiving end thereof into and out of operative position, drive shafts extending through the interior of each of said hollow shafts, gearing carried by said arms and operated by said drive shafts for rotating said supporting wheels, and means for rotating said drive shafts for propelling said machine over the surface upon which it is operated.

14. A loading machine comprising a conveyer frame having one end thereof arranged to receive material to be loaded, wheels for supporting said frame, arms pivotally connected with said frame and upon which said wheels are journaled, means for swinging said arms about their pivotal connections to raise and lower said frame to bring the receiving end thereof into and out of operative position, means extending across said frame to constrain the arms on opposite sides thereof to move in unison with one another, gearing for driving said wheels independent of the vertical adjustment thereof relative to said frame, a motor located at one side of said frame for driving said gearing, and means extending across said frame for transmitting movement from said motor to the wheels on the opposite side of said frame.

15. A loading machine comprising a truck adapted to travel on a mine track and having

a main frame plate, gathering means comprising an elongated conveyer frame having a supplemental frame plate, an extension from said supplemental plate through a slot in said main plate, and a pivotal connection between said plates to permit lateral swinging movement of said gathering means relatively to said truck while preventing upward or downward movement relatively to said main frame plate by reason of the interlocking connections between said main and supplemental plates at and near said pivotal connection.

16. A loading machine comprising two frame members having interlocking connections between them, one of said members having a slot therein and the other of said members having an offset portion extending through said slot so that different portions of said last-mentioned member engage opposite sides of said first-mentioned member.

17. A loading machine comprising a main frame plate, a supplemental frame plate arranged to overlap said main frame plate, said supplemental plate having a tongue at the end thereof extending through a slot in said main frame plate, and a pivotal connection between said tongue and said main frame plate.

18. A loading machine comprising a main frame plate having an arcuate slot therein, and a supplemental frame plate having one end thereof overlapping said main frame plate and having an extension offset relative thereto and extending through said arcuate slot, said extension being pivotally connected with said main frame plate on the side thereof opposite the main portion of said supplemental frame plate so that said supplemental plate may be swung about said pivotal connection while the offset portion of the extension thereof travels in said arcuate slot.

19. A loading machine comprising a main frame, a supplemental frame connected thereto for relative movement laterally, continuous conveyer mechanism extending uninterruptedly along said supplemental frame and along said main frame, an interlocking connection comprising a pivoted tongue between said main and supplemental frames and extending through an arcuate slot in the main frame to prevent upright movement of said supplemental frame relatively to said main frame while permitting lateral swinging movement of said supplemental frame relatively to said main frame and while the continuity of said conveyer mechanism is preserved, and means for swinging the supplemental frame relatively to said main frame.

20. A loading machine comprising an elongated main frame, an elongated supplemental frame connected to said main frame for lateral movement relatively thereto, conveyer mechanism extending along said main and supplemental frames, and means comprising a main frame plate and a supplemental frame plate for preventing relative vertical movement of said supplemental frame while permitting swinging movement thereof, one of said plates having a tongue extending through an arcuate opening in the other of said plates to hold said plates from movement relatively to one another in a direction transverse to the planes thereof, but permitting movement of said plates relatively to one another in the direction of their planes.

21. A loading machine comprising a main frame plate, a supplemental frame plate overlapping said main frame plate at one end thereof, said main frame plate having an arcuate slot therethrough adjacent said end, an extension on the end of said supplemental frame plate offset therefrom and extending through said slot, means for pivotally connecting said extension to said main frame plate at the center of curvature of said arcuate slot, a rack on said main frame plate concentric with said arcuate slot, and means on said supplemental frame plate for engaging said rack to swing said supplemental plate about its pivotal connection with said main plate.

22. A loading machine comprising a main frame, a supplemental frame overlapping said main frame and having the overlapping end pivotally connected with said main frame, said supplemental frame having a conveyer bed extending longitudinally thereof, a plurality of endless conveyer chains arranged in parallelism to travel along the upper surface of said bed from the receiving end thereof toward the delivery end thereof, a motor for driving said endless conveyer chains, an arcuate rack on said main frame, a pinion connected with said supplemental frame for engaging said rack, two sets of gearing for connecting said pinion with said motor to drive said pinion in opposite directions, and a clutch for selectively connecting said motor to either of said sets of gearing to cause said pinion to swing in opposite directions relatively to said main frame.

23. A loading machine comprising supporting framework, gathering means on the forward end thereof, a conveyer on said framework extending from said gathering means to the rear end of said framework, and mechanism mounted on said framework and adapted to be connected to anchorages extraneous to said framework for advancing the latter together with said gathering means rectilinearly to gather a load for said conveyer and for retracting said gathering means with a more rapid movement than the advancing movement.

24. A loading machine comprising a conveyer frame, a gathering device at the forward end thereof, means for conveying toward loading position the material gathered by said gathering device, rope gearing com-

prising rope winding mechanism mounted on said frame for moving the gathering device forward to gather a load and to retract the same, and operator-controlled power-operated mechanism for operating said rope winding mechanism to cause said gathering device to be retracted quickly compared with its advancing movement.

25. In loading apparatus for low roof mine chambers, the combination with an elongated supporting frame, of a conveyer extending longitudinally thereof with a forward receiving end, truck wheels for supporting said frame, and means comprising permanent supporting connections between said truck frame and said wheels for varying the elevation of said frame and conveyer and the position of the axles of said wheels relative to said frame to secure clearance of the conveyer during transportation, and a squatting position of said frame when said conveyer is operated in a low roof mine chamber while said wheels remain connected to said frame to guide the latter along a mine track.

26. In a loading machine, the combination with an elongated frame having a runway extending along horizontal lines, of conveyer mechanism mounted on said frame to travel horizontally along said runway, a scoop for directing material onto said conveyer mechanism, means for moving said scoop rectilinearly to gather a load and direct it onto said conveyer mechanism, wheeled guiding means intermediate the ends of said frame, and means connected between said wheeled guiding means and said frame for adjusting the elevation of the latter together with the said horizontal runway and the conveyer mechanism traveling horizontally along said runway.

27. In a loading machine, the combination with supporting framework, of conveyer mechanism mounted thereon, a scoop at the forward end of said conveyer mechanism, a plurality of spaced-apart trucks for said framework, means for adjusting the elevation of the wheels of both trucks to vary the elevation of said scoop to operate over a mine floor in advance of a mine track or clear the track for transportation, and propelling mechanism for operating the scoop by bodily movements thereof with said framework and said trucks.

28. A loading machine comprising a conveyer, a scoop at the forward end of said conveyer in position for operation in advance of a mine track, a truck for supporting the rear portion of said conveyer on a mine track, an additional truck for supporting the forward portion of said conveyer and said scoop, and means for adjusting the elevation of the wheels of both trucks relative to the conveyer and scoop to elevate the conveyer and scoop to clear the track during transportation and to effect lowering of the conveyer and scoop for loading operation from the floor in advance of the mine track.

In testimony whereof I have signed my name to this specification on this 25th day of April, A. D. 1918.

EDMUND C. MORGAN.