(No Model.) W. R. FOX. 5 Sheets—Sheet 1.

DRILLING MACHINE.

No. 564,479. Patented July 21, 1896.

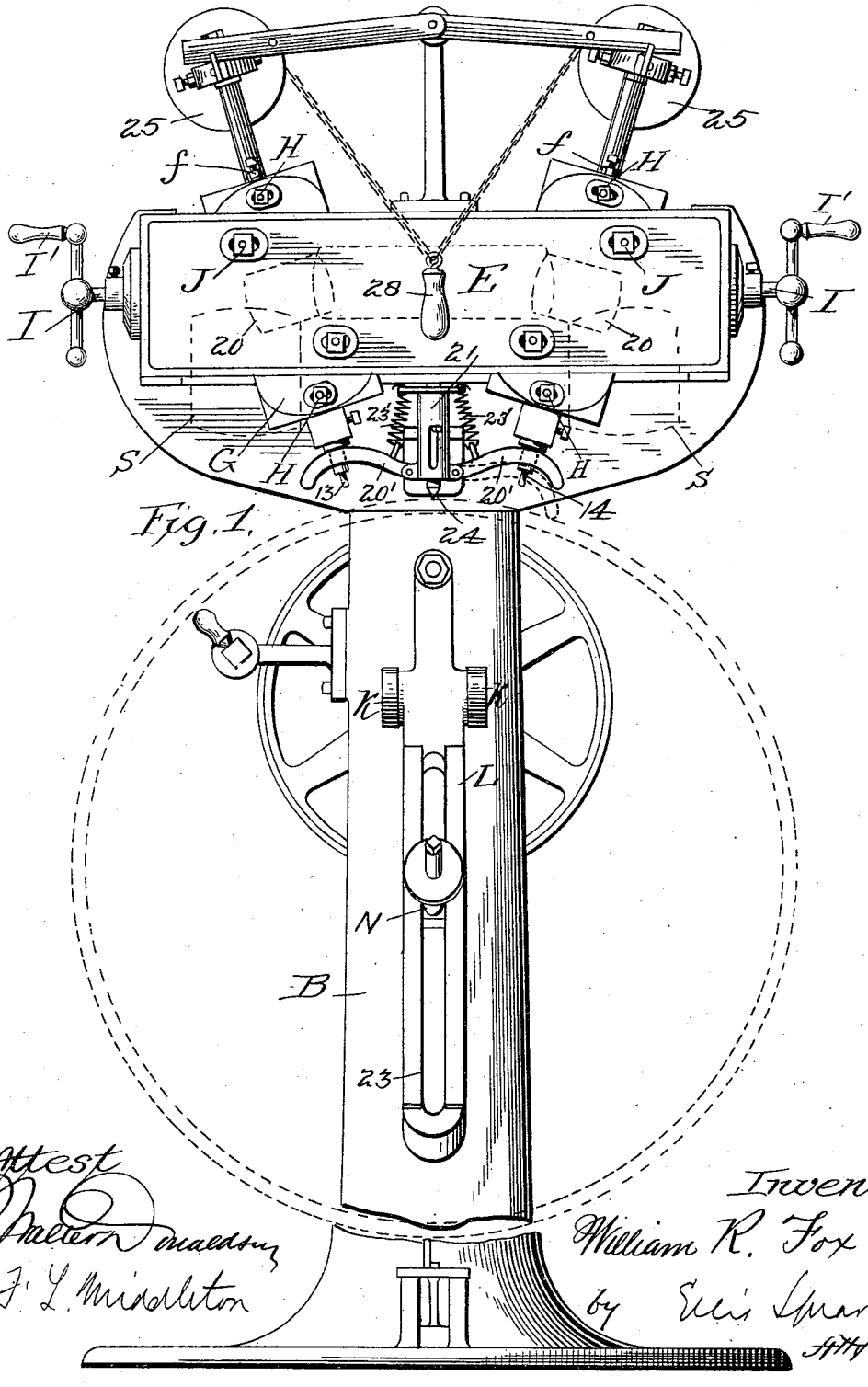

Fig. 1.

Attest
Walter Donaldson
F. L. Middleton

Inventor
William R. Fox
by Ellis Spear
Atty.

THE NORRIS PETERS CO., PHOTO-LITHO., WASHINGTON, D. C.

(No Model.) 5 Sheets—Sheet 2.

W. R. FOX.

DRILLING MACHINE.

No. 564,479. Patented July 21, 1896.

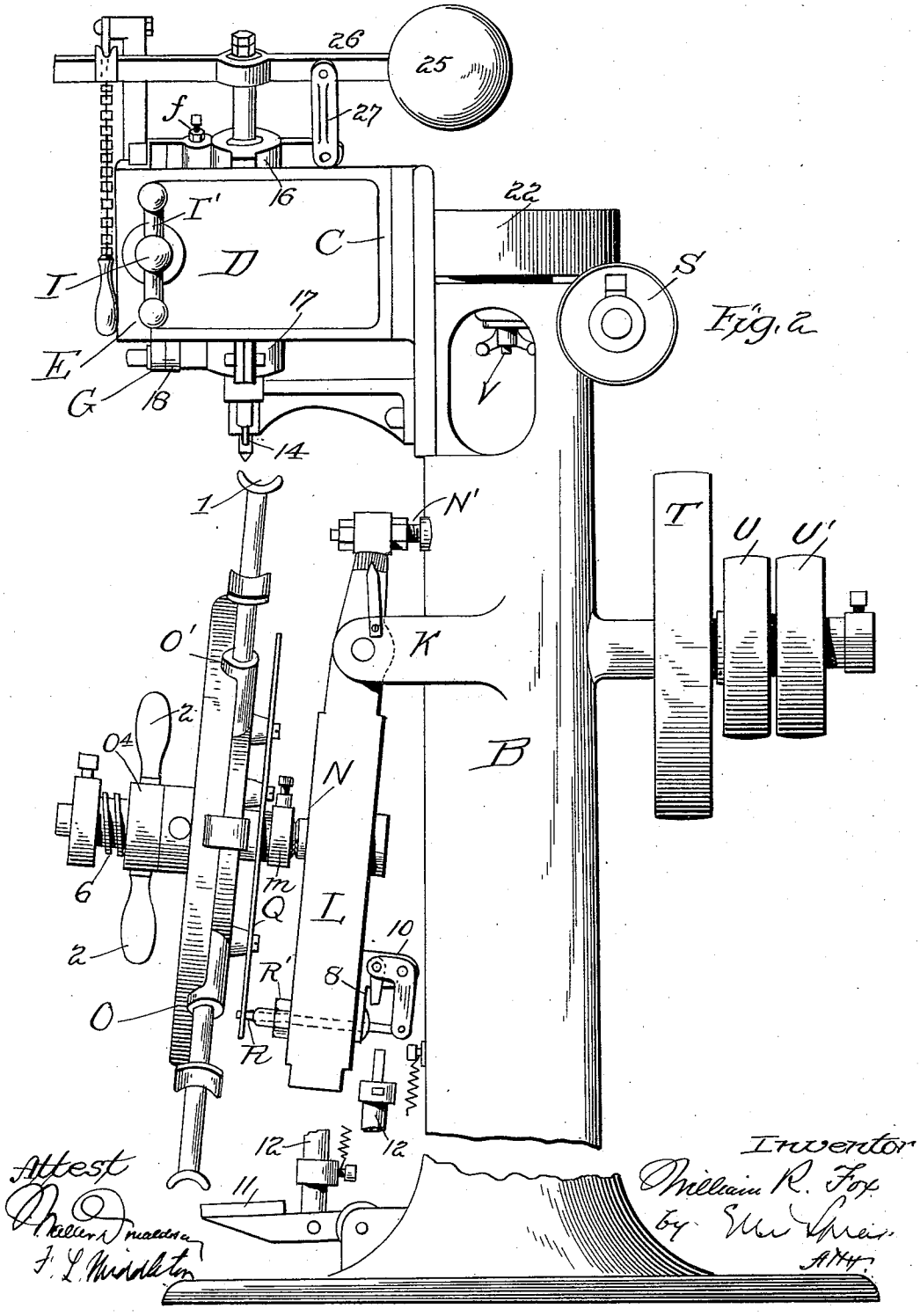

Fig. 2.

THE NORRIS PETERS CO., PHOTO-LITHO., WASHINGTON, D. C.

(No Model.) 5 Sheets—Sheet 3.

W. R. FOX.

DRILLING MACHINE.

No. 564,479. Patented July 21, 1896.

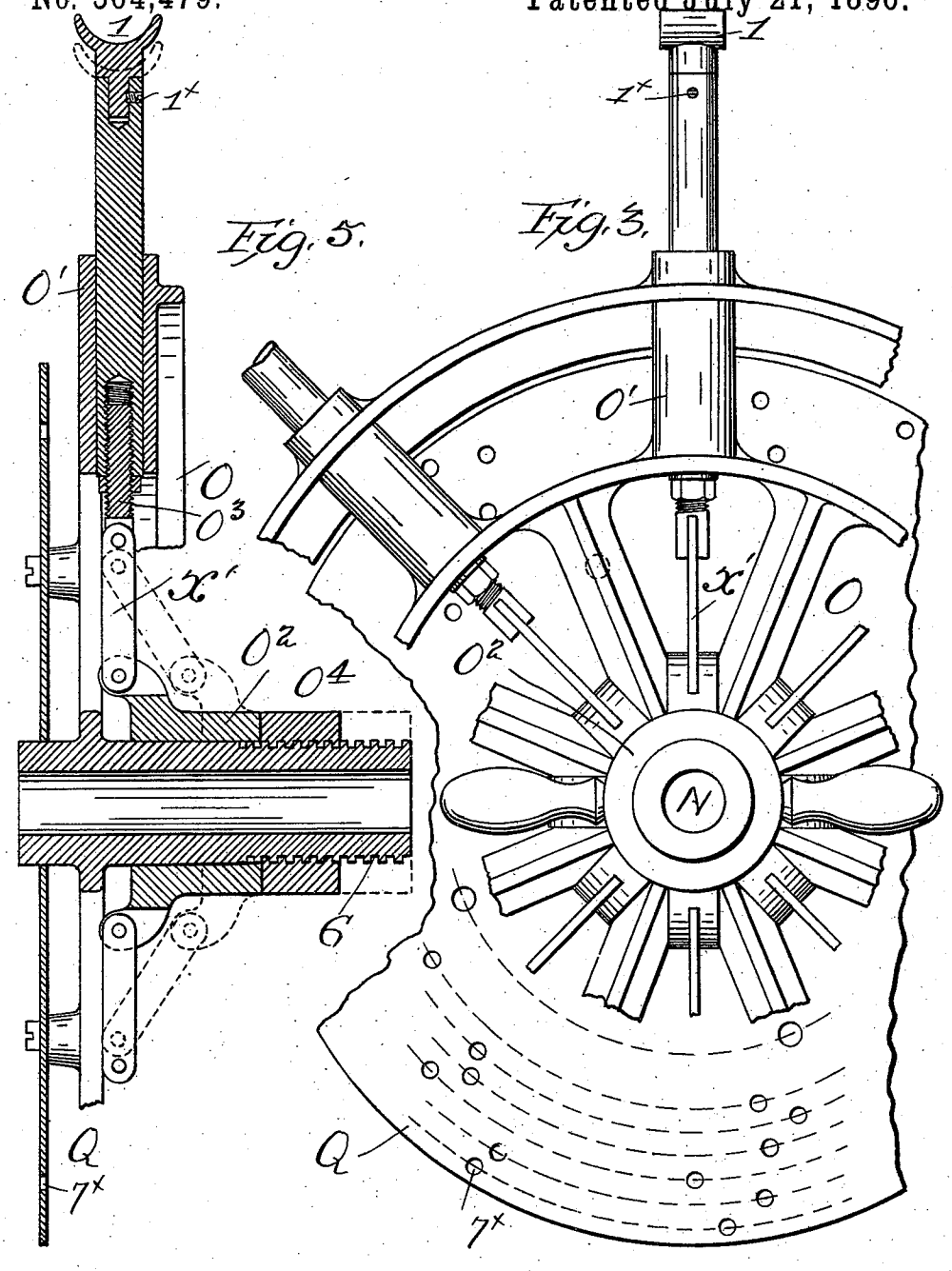

Witnesses
F. L. Middleton

Inventor
William R. Fox
By Attorney
Ellis Spear

THE NORRIS PETERS CO., PHOTO-LITHO., WASHINGTON, D. C.

(No Model.) 5 Sheets—Sheet 4.

W. R. FOX.

DRILLING MACHINE.

No. 564,479. Patented July 21, 1896.

Fig. 4

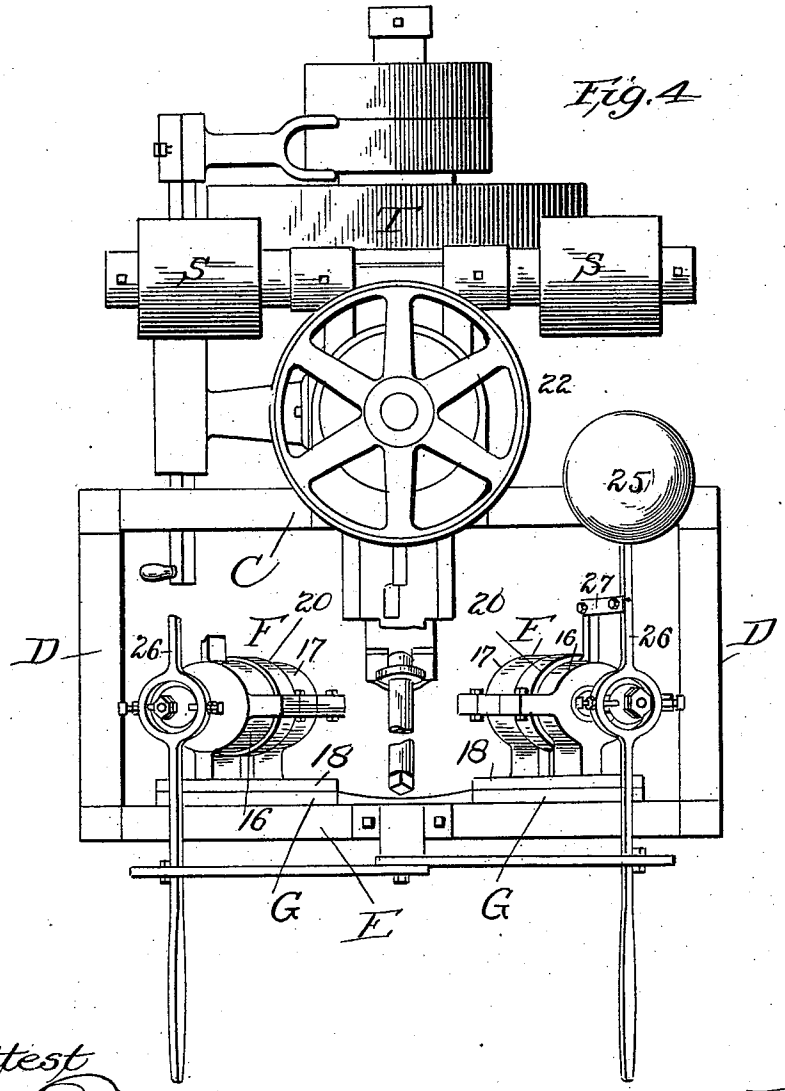

Attest
F. L. Middleton

Inventor
William R. Fox
by Ellis Spear
Atty.

THE NORRIS PETERS CO., PHOTO-LITH., WASHINGTON, D. C.

(No Model.) 5 Sheets—Sheet 5.

W. R. FOX.

DRILLING MACHINE.

No. 564,479. Patented July 21, 1896.

Fig. 6.

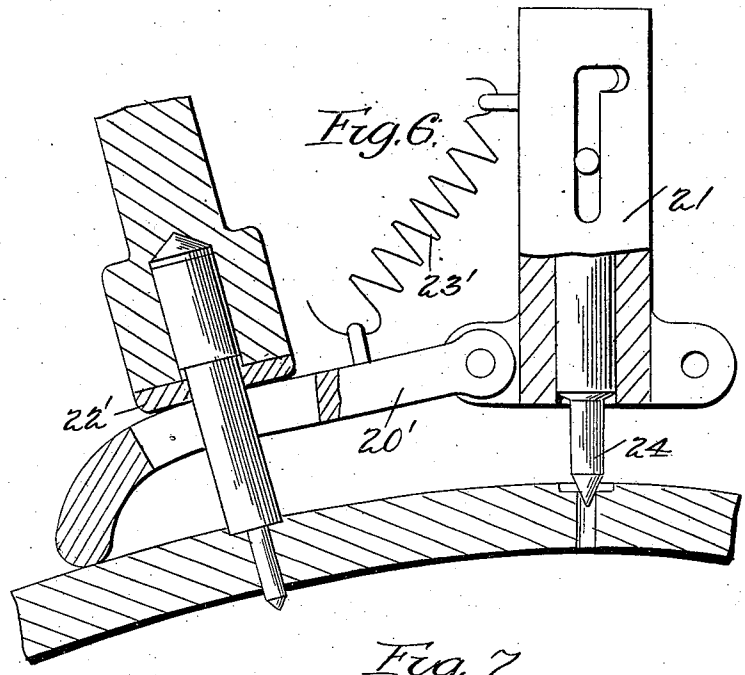

Fig. 7.

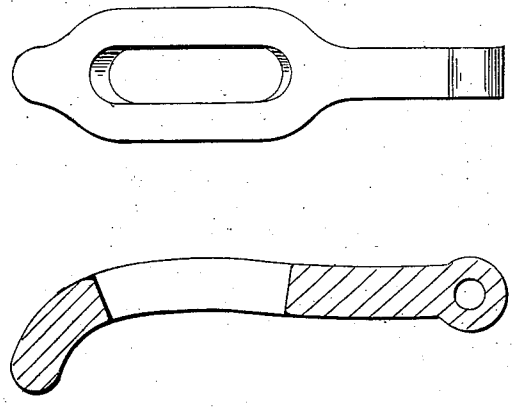

Attest
Walter Dallas
F. L. Middleton

Inventor
William R. Fox
by Ellis Spear
Atty.

THE NORRIS PETERS CO. PHOTO-LITHO., WASHINGTON, D. C.

UNITED STATES PATENT OFFICE.

WILLIAM R. FOX, OF GRAND RAPIDS, MICHIGAN, ASSIGNOR TO THE FOX MACHINE COMPANY, OF SAME PLACE.

DRILLING-MACHINE.

SPECIFICATION forming part of Letters Patent No. 564,479, dated July 21, 1896.

Application filed June 27, 1895. Serial No. 554,274. (No model.)

To all whom it may concern:

Be it known that I, WILLIAM R. FOX, a citizen of the United States, residing at Grand Rapids, in the county of Kent and State of Michigan, have invented certain new and useful Improvements in Drilling-Machines, of which the following is a specification, reference being had therein to the accompanying drawings.

My invention is designed especially for drilling spoke-holes in the rims of bicycles, though it is not limited in its use to this class of work.

It is my object to so drill the holes that the axial lines thereof will be directly in line with the axis of the spoke, so that the spoke will extend directly to the hub without being bent at the nipple and the nipple itself will stand in line with the spokes.

The general tendency in drilling wooden rims is to drill toward the center of the wheel and not in line with the direction of the spoke, so that when the nipple is screwed up it brings the bend in the spoke next to the nipple, which has a tendency to weaken and break the spoke at that point and also to pull the nipple to one side, making an uneven bearing, enlarging the hole in the wood, and tending also to split and render the rim useless.

My invention includes, preferably, two radial drills, with means for adjusting them to different angles to drill the holes tangent to the wheel-hub and a support or spider for holding the rim and for presenting different parts thereof to the drills, said support being adjustable, so that the drills will operate at an angle to the rims to drill the hole whose extended axial line will strike the hub at or near the outer edge thereof.

My invention includes a special arrangement of dial-plate combined with the spider, by which the holes for the opposite sets of spokes may be properly located, said spider being adapted to permit the ready reversal of the rim.

In the drawings, Figure 1 is a front view with the spider removed. Fig. 2 is a side elevation; Fig. 3, a full view of the spider; Fig. 4, a top plan view of the machine; Fig. 5, a detail view of the plunger for holding the rim of the spider and means for operating said clamp; and Figs. 6 and 7 are details of the countersink-stops.

The rim to be drilled is seated at 1, in the ends of the spider-plungers, said ends being rounded to conform to the cross-sectional curve of the rim and held in the ends of the plungers by screw-pins 1^x. The plungers work through boxes O′ of the spider or wheel O, and are operated to engage or release the rim by the toggle-links X′, connected to the sliding sleeve O^2 and the screw-pins O^3, fitted to screw-threaded sockets in the plungers, and by this connection the plungers may be adjusted. The sleeve may be held in place against the reaction of the tire by the nut O^4 on the threaded hub 6 of the spider. The nut has handles 2, by which it may be operated. The spider is adapted to turn on the pin N, carried by a bracket L, pivoted near its upper end to ears K of the standard B, and adjustable as to inclination by the screw N′ bearing against the standard or column and passing through the upper end of the bracket.

The spider is held in any position when turned about its axial center pin N by a stop-pin R entering one of the series of holes 7^x formed in a dial-plate Q, the plate having two or more rows of holes for the purpose hereinafter mentioned. The stop-pin is carried by a lever 10 pivoted to block 8 adjustable in the bracket L and the treadle and rod 11 12, so that the pin may be withdrawn to allow the spider to be turned one step for drilling the next hole in the rim.

The drills 13 14, of which I preferably use two, have their shafts journaled in boxes F, having upper and lower bearings 16 and 17, said boxes having flanges 18 bearing upon the plates G, said boxes being adjustably connected to the plate by a pivot, so that the boxes with the drill-spindles may be set at different angles to suit different sizes of wheels, and when adjusted they may be fixed by the set-screws H. The plates G are supported by the face-plate E by screws J passing through slots in the face-plate and into the said plates G, and these plates may be adjusted toward and from each other by screws I extending inward from the ends of the machine and operated by the cranks I′. The face-plate E is supported by the brackets D extending forward from the head C, which projects on each side at the top of the column

or standard. The pulleys 20, for driving the drill-spindles, are arranged between the upper and lower bearings 16 and 17 of the boxes, and these are driven from a belt-wheel T, from which the belt passes upon idler-pulleys S, thence around the pulleys 20, and also around the tightener-pulley 22, which may be held in any adjusted position by the wing-nut V, Fig. 2.

In Fig. 1 I show the rim to be drilled in dotted lines and also the hub thereof. The spindles are set at such an inclination that their axial lines, if extended, would be tangent to the hub periphery; therefore the holes which will be drilled through the rim will coincide exactly with this tangent line. Two holes will be drilled at each downward movement of the drills, and by adjusting the drills as to incline, and also as to distance apart, the machine will be adapted to various diameters of rims.

By reference to Fig. 2 it will be seen that the axial line of the drill, if extended, would strike the outer end of the hub at the point P, due to the inclination of the spider in relation to the direction of motion of the spindle, and thus the hole drilled will have a second inclination directly in line with the spoke which must connect with the outer end of the hub.

The spider is turned step by step, and held at the various positions by the stop-pin engaging the holes in the dial. When one set of holes have been drilled for the spokes on one side of the wheel, the rim is removed from the plungers, which are slightly retracted for the purpose, and the rim is reversed and replaced thereon, and the stop-pin now engages the second row of holes in the dial-plate, which are arranged intermediate of the holes in the first plate. The holes for both sets of spokes are thus drilled at the proper angle. The sets of holes are arranged to suit different sizes of wheels, and for this purpose the block carrying the stop-pin is made adjustable toward and from the center of rotation in a slot 23 of the support L, and the block is fixed in any position by the nut R′.

The spider is adjustable in and out on the pin N, by adjusting the collar *m* back of it, this being necessary to bring the rims of different diameters of wheels directly in line with the drills.

The belt-pulley T is driven from the tight pulley U, there being also a loose pulley U′.

The drills are held up in normal position by the counterweights 25, the levers 26 of which are swiveled to the upper ends of the spindles, said levers being fulcrumed upon the swinging links 27. The forward ends of the levers have handles by which the levers may be depressed to force the drills to their work. These levers may be depressed simultaneously by the chains connected thereto and to a common handle 28.

The drills have countersinks, by which the hole is drilled and the countersink formed at the same time. The set-screws *f* serve to limit the downward movement of the handles and consequently the depth of the countersink.

My machine may be used for various kinds of work other than bicycle-rims.

In order to limit the extent to which the drill will enter the rim for the countersink, I provide a countersink-stop for each drill composed of an arm 20′ pivoted to the support 21, Fig. 1, and slotted to receive the drill, the outer end of the support being bent down to bear on the rim close to the drill. A washer 22′ on the face of the drill-holder bears on the stop-lever when the countersink has been bored, and thus determines the depth of the same. This arrangement of stop gives uniform wear and it provides sufficient space around the drill for the escape of shavings. The stop-levers are held constantly in contact with the drill-holders by the springs 23′.

The centering stop-pin 24 is arranged in the holder 21, and when one set of holes has been bored and the rim reversed this pin will center the rim for the other set.

I claim—

1. In combination, the vertical standard having an axis or bearing extending laterally therefrom, a rotary work-support on said axis, the upper face-plate, the drill-holding boxes connected thereto pivotally and also to have sliding movement thereon, means for adjusting the boxes toward and from each other along the face-plate, means for holding the drills in inclined position to which they may be adjusted, and means for adjusting the laterally-projecting axis as to inclination to adjust the rotary support in a plane at right angles to the plane of the drills, substantially as described.

2. In combination in a drilling-machine, the drill, the rotary work-support, the dial having holes, the stop-pin, and the adjustable bracket carrying the work-support, whereby the inclination of the same in relation to the drill may be changed, the said stop-pin being carried by the adjustable bracket and adjustable thereon toward and from the axis of the rotary support, substantially as described.

3. In combination in a drilling-machine, the drill, the rotary work-support, and the pivoted bracket carrying the bearing therefor, said bracket being adjustable as to inclination and said bearing being adjustable in the bracket toward and from the drill, substantially as described.

4. In combination in a drilling-machine, the drill, the rotary work-support, the dial, the pivoted bracket carrying the work-support with its dial and the stop-pin adjustable on the pivoted bracket toward and from the axis of the dial, and means controlling the stop-pin, comprising the lever on the bracket and the connections thereto, substantially as described.

5. In combination in a drilling-machine,

the work-support and the drill carrying a countersink and a stop for limiting the action thereof, consisting of the pivoted part engaging the rim adjacent to, but at one side of the drill and movable therewith on its pivot in the retracting and advancing movement thereof, substantially as described.

6. In combination in a drilling-machine, the work-support, the drill carrying a countersink and a stop for limiting the action thereof, consisting of the pivoted slotted part through which the drill extends, the free end of said stop bearing on the rim adjacent to the drill and to one side thereof, and moving pivotally to and from the work with the drill, substantially as described.

7. In combination with a rotary work-support, a drill arranged to drill holes in the rim carried thereby, and a centering-pin arranged adjacent to the rotary work-support to enter the holes of the rim as carried by the support after the drill has made holes therein, substantially as described.

8. In combination with a rotary work-support, a drill and a centering-pin arranged adjacent to the said work-support to act simultaneously upon different parts of the rim carried thereby and the dial and stop for controlling the rotary work-support.

9. In combination, a rotary work-support in the form of a spider having radial arms with bearings at the outer ends for the rim to be drilled and the drill and the centering-pin arranged adjacent to said work-support to act on different parts of the rim carried thereby, substantially as described.

10. In combination, a rotary work-support comprising radially-adjustable arms having bearings at their outer ends to support the rim and the drill and centering-pin to act on different portions of the rim carried by the said adjustable arms, substantially as described.

11. In combination the rotary work-support, the centering-pin, the drills on each side of the same and the stops pivoted on each side of the centering-pin, substantially as described.

12. In combination, the standard, the drills supported at the upper end thereof and adjustable as to inclination, the bracket pivotally connected to the standard and extending down along the same, the shaft or bearing extending laterally from the bracket, the rotary work-support on said bearing and means for adjusting the bracket to adjust the inclination of the work-support relative to the drill, substantially as described.

13. In combination, the work-support, the drill and the countersink-stop pivoted off at one side of the drill extending across the same and engaging therewith and having its free end bent down to engage the work to one side of the drill, substantially as described.

14. In combination, the drill, the support for the work and a countersink-stop arranged to bear on the work adjacent to the drill but at a slight distance therefrom so as to leave a space between the drill and stop, substantially as described.

15. In combination, the standard, a rotary work-support, a bearing-shaft therefor, adapted to permit the adjustment of the work-support along the same, means for adjusting the inclination of said bearing to change the inclination of the rotary work-support and a drill with holding and adjusting means therefor to change its inclination in a plane at right angles to the work-support, substantially as described.

16. In combination, the standard, a rotary work-support, a bearing therefor adapted to permit the adjustment of the work-support along the same, and arranged to be adjusted both as to inclination and toward and from the drills, means for holding the bearing in its adjusted position and means for adjusting the drill as to inclination in a plane at right angles to that of the rotary work-support.

In testimony whereof I affix my signature in presence of two witnesses.

WILLIAM R. FOX.

Witnesses:
JNO. DUFFY,
EARL STOKE.