Jan. 26, 1965 C. B. ROBBINS 3,166,819

CLIP FOR EMBALMING OPERATIONS

Filed Sept. 7, 1961

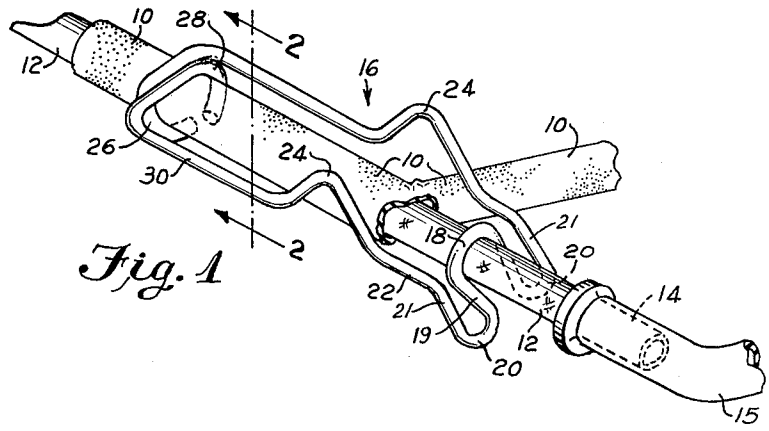

Fig. 1

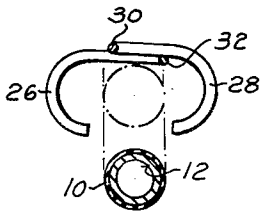

Fig. 2

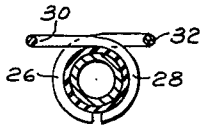

Fig. 3

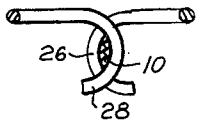

Fig. 4

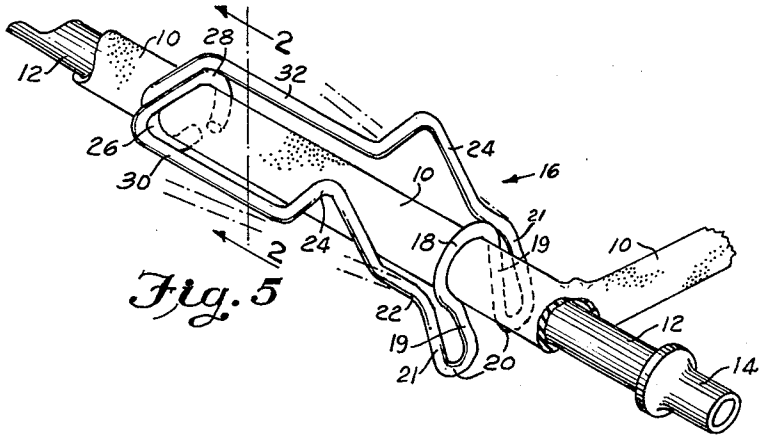

Fig. 5

Carl B. Robbins
INVENTOR

By: Homer R. Montague
ATT'Y.

United States Patent Office 3,166,819 Patented Jan. 26, 1965

3,166,819

CLIP FOR EMBALMING OPERATIONS

Carl B. Robbins, W. Main St., Searsport, Maine

Filed Sept. 7, 1961, Ser. No. 136,531
3 Claims. (Cl. 27—21)

This invention relates to embalming operations, and has for its principal object the provision of a highly useful and efficient clip to facilitate the secure connection of fluid-transfer conduits to the blood vessels of bodies undergoing such operations. The improved clip is also useful, in the improved technique to be described below, as a permanent closure for such vessels after detachment of the external conduits; it thus forms an efficient substitute for the relatively slow and difficult suturing operations usually needed for this purpose.

In general, the clip of the invention is constituted by a single piece of spring wire or the like, specially formed to provide specialized clamping or securing functions at its opposite ends, and provided intermediate such ends with convenient finger-operated grips or the like in aid of its special purposes. The clamping formations at both ends of the clip are adapted to secure a blood vessel (a vein or an artery) firmly upon an inserted fluid injection tube, drainage tube, trocar, needle or the like for fluid transfer therebetween, and the formation at one end is further adapted to act as an automatic permanent closure for the vessel after the tube has been removed.

A preferred form of the invention will now be described in detail, by way of example, without limiting the invention to this specific structure. In the appended drawings,

FIG. 1 is a perspective view of the clip shown in a typical position of use to secure a blood vessel to a fluid conducting tube.

FIG. 2 is a sectional view taken along line 2—2 of FIG. 1, with the clip in a distended condition incidental to its application to the blood vessel and the inserted tube.

FIG. 3 is a similar sectional view showing the parts when the vessel has been fully clamped to the tube.

FIG. 4 shows a similar view of the parts after the inserted tube has been slipped out of the blood vessel, the clamp now serving as a permanent closure for the vessel.

FIG. 5 is a view similar to FIG. 1 showing a modified manner of using the clip.

Modern embalming operations make use of relatively high-pressure pumps for the usual purposes of educing blood from the body, and for its replacement by suitable embalming fluids. The pump is connected to a severed vein or artery by a flexible hose or the like having an injection or drainage tube which slips into such a blood vessel after the latter has been exposed by the usual operations. It is conventional practice to secure the vessel upon this rigid tube either by a clamp or by a temporary constricting winding or suture. After the blood has been replaced by the embalming fluid, it is conventional practice to permanently close the severed vessel by suturing, a difficult and often distasteful operation.

The invention provides a device by which the reliability of the vessel-to-tube connection is greatly increased, even where quite high eduction and injection pressures are employed; it also provides a permanent clamp-off or closure of the affected vessel as a mere incident to the removal of the inserted tube, and thus eliminates the difficulty and risks attendant upon the need for sutured closures.

Referring first to FIG. 1 of the drawings, the invention is shown as applied to a blood vessel **10** in which is inserted the hollow rigid drainage (or injection) tube **12**, having usual fitting end **14** for connection to the fluid conduit or hose **15** leading to the pump.

The clip of the invention is indicated as a whole by numeral **16**, and is preferably formed of spring wire or

like material. It may have any appropriate size, typically an over-all length of about one inch, and lateral profile dimensions of about a half inch. At the nearer end in FIG. 1, the wire is formed into a circular arc **18** of somewhat over a half turn, so sized as to slip firmly over the injection tube or drainage tube when the latter is in position within blood vessel **10**. The ends of this arc merge into downwardly converging extensions **19** tangential to the tube **12**. These extensions terminate in reverse loops **20** whose rounding facilitates the sidewise sliding of arc portion **18** over the tube **12**, whose surface is usually roughened to improved the grip. In the alternate manner of use shown in FIG. 5, the arc **18** may encompass both the vessel **10** and tube **12**, compressing the former upon the latter. Outwardly of the loops **20**, the wire extends upwardly in arms **21** merging into leg portions described below. The arc **18**, extensions **19**, loops **20** and arms **21**, lie preferably in a single plane transversely of the axis of the tube **12**.

From each arm **21** the wire extends rearwardly (in FIG. 1) for a short distance parallel to the tubular axis as at **22**, and then is deflected upwardly and back to provide a convenient pair of finger grips **24**, by which the device may be handled, and by which the clamp formations at the far end may be controlled. In the relaxed condition prior to installation, these legs actually are divergent, as indicated by the dashed lines.

From grips **24**, the wire legs again extend parallel to the tubular axis, and at the far end each extremity of the wire is turned inwardly and terminates in a half-loop or semicircular jaw or hook, curved on a diameter substantially equal to that of arc **18**, these hooks being closely adjacent one another and oppositely directed so as to form opposed clamp elements **26** and **28**. In the rest condition, as stated, the longitudinally extending legs **30** and **32** will be divergent, the parallel condition in FIG. 1 resulting from the presence of the vessel **10** between the arcuate jaws or hook elements **26** and **28**.

The use of the device will best be understood from the diagrams of FIGS. 2, 3 and 4. When the tube **12** has been inserted into vessel **10**, the arc portion **18** is slipped sideways over the injection or drainage tube, or these assembled parts, the finger grips **24** being compressed towards one another to separate and open the jaws **26** and **28** as in FIG. 2, so that the vessel-and-tube assembly can enter between these jaws. The grips **24** are now released, and the vessel **10** is firmly clamped to tube **12** at the far end of the clip, as shown in FIG. 1 and FIG. 3. Eduction and injection can now proceed with great security against leakage or danger of disconnection. The grip of arc **18** on tube **12** (FIG. 1) or upon vessel and tube (FIG. 5) aids the jaws **26**, **28** in their retaining function.

When injection has been completed, the clip **16** is held in position relative to vessel **10** by the fingers while tube **12** is forcibly withdrawn from the vessel. If necessary, and in the FIG. 5 installation, slight pressure on the grips **24** will loosen the grip of jaws **26** and **28** until the distal end of tube **12** has been retracted to a point between those jaws and the arc **18**. The natural spring tension of the clip now closes jaws **26** and **28** tightly upon vessel **10**, which is thereby collapsed and closed as shown in FIG. 4. The tube **12** is then slipped completely out of vessel **10**, leaving the latter permanently closed in an unobjectionable manner. If, however, the use of a suture is desired, the same may readily be applied to the blood vessel at a point between jaws **26**, **28** and the free end of the vessel, after which the clip may be removed by operating the grips **24**.

The invention thus provides a greatly improved form of blood-vessel clip having manifold advantages and utility in this specialized field of application, yet with a relatively simple and low-cost construction. It will be obvious that

the particular physical form in which the concept is embodied can be varied without departing from the spirit of the invention, and I therefore do not limit my invention to the illustrated details, except as may be required by the scope of the appended claims.

What is claimed is:

1. An elongated embalming clip for securing a blood vessel to a fluid-transfer tube or the like, comprising a single length of spring wire or the like bent to form at one end of the clip an open arc of over 180° with converging tangential extensions, transversely outwardly extending bent loops at the ends of said extensions, an arm forming an extension of each loop, elongated legs into which said arms merge, said legs extending to the opposite end of the clip and lying on opposite sides of the longitudinal center of the clip, said arc, said extensions, said arms and said loops lying in a plane transversely of the length of the clip, the ends of said legs remote from said plane each being provided with lateral portions extending oppositely across the longitudinal center of the clip and terminating in a semicircular hook, each hook fitting and being engageable with the side of the blood vessel opposite the leg to which it is connected, said hooks lying in closely adjacent planes parallel to said first-named plane, the resiliency of said legs biasing said remote ends apart whereby said hooks will move into clamping engagement with the blood vessel.

2. An embalming clip according to claim 1 wherein each of said hooks is of a diameter equal to the diameter of said arc, said hooks having ends lying closely adjacent each other at the side of the clip corresponding to the open side of said arc whereby, when said remote ends of said arms are sprung toward each other to move said hook ends away from each other, said clip may be inserted around a tube by direct movement of the clip laterally of the tube.

3. An embalming clip according to claim 1 wherein each of said hooks is of a diameter equal to the diameter of said arc, said hooks having ends lying closely adjacent each other at the side of the clip corresponding to the open side of said arc whereby, when said remote ends of said arms are sprung toward each other to move said hook ends away from each other, said clip may be inserted around a tube by direct movement of the clip laterally of the tube, said legs, between the ends thereof, having portions offset therefrom to the side of said clip opposite said loops to form finger grips.

References Cited by the Examiner

UNITED STATES PATENTS

770,982	9/04	Plassmann	285—241 XR
874,378	12/07	Allen	285—241 XR
2,215,725	9/40	Martinson	27—21
2,284,004	5/42	McCurdy	24—261 XR

FOREIGN PATENTS

6,236	1910	Great Britain.
24,160	1910	Great Britain.

RICHARD A. GAUDET, *Primary Examiner.*

M. HENSON WOOD, JR., *Examiner.*