(12) INTERNATIONAL APPLICATION PUBLISHED UNDER THE PATENT COOPERATION TREATY (PCT)

(19) World Intellectual Property Organization
International Bureau

(43) International Publication Date
13 December 2012 (13.12.2012)

WIPO | PCT

(10) International Publication Number
WO 2012/170732 A4

(51) International Patent Classification:
A61M 37/00 (2006.01) *A61M 5/142* (2006.01)
A61M 31/00 (2006.01)

(21) International Application Number:
PCT/US2012/041418

(22) International Filing Date:
7 June 2012 (07.06.2012)

(25) Filing Language: English

(26) Publication Language: English

(30) Priority Data:
61/494,317 7 June 2011 (07.06.2011) US
61/562,957 22 November 2011 (22.11.2011) US

(71) Applicant *(for all designated States except US)*: **CALIFORNIA INSTITUTE OF TECHNOLOGY** [US/US]; 1200 East California Blvd, Pasadena, CA 91125 (US).

(72) Inventors; and
(75) Inventors/Applicants *(for US only)*: **RINDERKNECHT, Derek** [US/US]; 1200 East California Blvd, Pasadena, CA 91125 (US). **AZIZGOLSHANI, Heshman** [US/US]; 1200 East California Blvd, Pasadena, CA 91125 (US). **GHARIB, Morteza** [US/US]; 1200 East California Blvd, Pasadena, CA 91125 (US).

(74) Agent: **STIRRAT, Mark, A.;** Dickstein Shapiro LLP, 2049 Century Park East Suite 700, Los Angeles, CA 90067-3109 (US).

(81) Designated States *(unless otherwise indicated, for every kind of national protection available)*: AE, AG, AL, AM, AO, AT, AU, AZ, BA, BB, BG, BH, BR, BW, BY, BZ, CA, CH, CL, CN, CO, CR, CU, CZ, DE, DK, DM, DO, DZ, EC, EE, EG, ES, FI, GB, GD, GE, GH, GM, GT, HN, HR, HU, ID, IL, IN, IS, JP, KE, KG, KM, KN, KP, KR, KZ, LA, LC, LK, LR, LS, LT, LU, LY, MA, MD, ME, MG, MK, MN, MW, MX, MY, MZ, NA, NG, NI, NO, NZ, OM, PE, PG, PH, PL, PT, QA, RO, RS, RU, RW, SC, SD, SE, SG, SK, SL, SM, ST, SV, SY, TH, TJ, TM, TN, TR, TT, TZ, UA, UG, US, UZ, VC, VN, ZA, ZM, ZW.

(84) Designated States *(unless otherwise indicated, for every kind of regional protection available)*: ARIPO (BW, GH, GM, KE, LR, LS, MW, MZ, NA, RW, SD, SL, SZ, TZ, UG, ZM, ZW), Eurasian (AM, AZ, BY, KG, KZ, RU, TJ, TM), European (AL, AT, BE, BG, CH, CY, CZ, DE, DK, EE, ES, FI, FR, GB, GR, HR, HU, IE, IS, IT, LT, LU, LV, MC, MK, MT, NL, NO, PL, PT, RO, RS, SE, SI, SK, SM, TR), OAPI (BF, BJ, CF, CG, CI, CM, GA, GN, GQ, GW, ML, MR, NE, SN, TD, TG).

Published:

— *with international search report (Art. 21(3))*

— *with amended claims (Art. 19(1))*

(88) Date of publication of the international search report:
18 April 2013

Date of publication of the amended claims: 6 June 2013

(54) Title: MEDICAMENT DELIVERY SYSTEMS

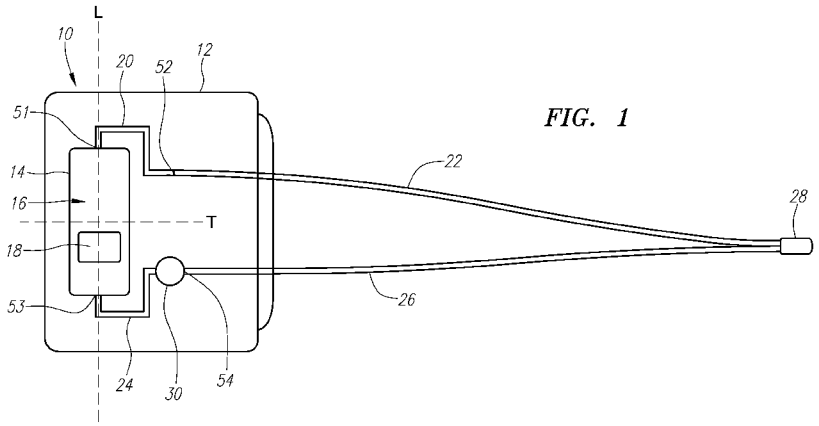

FIG. 1

(57) Abstract: Described herein are systems, devices, and methods for the delivery of substances to, or the sampling of substances from, a patient using a portable and preferably implantable device. The substances introduced to and/or taken from the patient are preferably fluidic and are driven by a miniature pump, such as a microimpedance pump. A number of design variations are explicitly and implicitly described, such as the use of multiple pumps and multiple reservoirs for containing medicaments. Methods of manufacture of these systems and devices are also described, for instance, using molding, micromachining, or lithographic processes.

WO 2012/170732 A4

AMENDED CLAIMS
received by the International Bureau on 28 March 2013 (28.03.2013)

1. (Previously Presented) A method of manufacturing an implantable drug delivery system including an impedance pump, comprising:

forming a first layer of a substrate having a pump chamber wall on which an activation element can be mounted;

forming a second layer of the substrate having an elongate recess connected to a plurality of elongate channels;

coupling the first layer to the second layer such that the pump chamber wall is positioned over the elongate recess and such that the elongate recess and the plurality of elongate channels are covered by the first layer; and

coupling the activation element to the pump chamber wall.

2. (Previously Presented) The method of claim 1, wherein the first layer is formed with a reservoir, and wherein the first and second layers are coupled together such that the reservoir is in communication with at least one of the plurality of elongate channels.

3. (Previously Presented) The method of claim 2, further comprising inserting a medicament into the reservoir and sealing the reservoir.

4. (Previously Presented) The method of claim 1, wherein the plurality of elongate channels terminate in two or more openings in the sidewall of the substrate, the method further comprising:

inserting drug perfusion tubing into the two or more openings; and

overmolding the tubing to secure and seal the tubing to the substrate.

5. (Previously Presented) The method of claim 4, further comprising adding adhesive to further secure and seal the tubing to the substrate.

6. (Previously Presented) The method of claim 1, wherein the first and second layers are formed with a mold having features micromachined thereon.

7. (Previously Presented) A medicament delivery system, comprising:

a substrate;

an impedance pump coupled to the substrate; and

at least one medicament reservoir formed in the substrate and in fluid communication with the impedance pump.

8. (Previously Presented) The system according to claim 7, further comprising:

an activation element disposed on the impedance pump, wherein activation of the activation element causes a cross-section of a portion of the impedance pump to decrease.

9. (Previously Presented) The system according to claim 8, wherein the activation element is a magnet.

10. (Previously Presented) The system according to claim 7, further comprising:

a first tube and a second tube, each coupled to the substrate;

a first channel in the substrate adapted to provide fluid communication between the impedance pump and the first tube; and

a second channel in the substrate adapted to provide fluid communication between the impedance pump and the second tube.

11. (Previously Presented) The system according to claim 10, wherein a first cross-section of the first channel and a second cross-section of the second channel are less than a cross-section of the impedance pump.

12. (Previously Presented) The system according to claim 10, wherein the first and second tubes extend laterally from the substrate.

13. (Previously Presented) The system according to claim 12, wherein the first and second tubes are coupled to an interface component.

14. (Previously Presented) The system according to claim 12, further comprising a dual lumen tube, wherein the first tube and the second tube are in fluid communication with lumens in the dual-lumen tube.

15. (Previously Presented) The system according to claim 12, wherein portions of the first and second tubes are covered by a sheath.

16. (Previously Presented) The system according to claim 10, wherein the at least one medicament reservoir is in fluid communication with the first channel or the second channel.

17. (Previously Presented) The system according to claim 7, further comprising a medicament stored in the at least one medicament reservoir.

18-20. (Canceled)