E. & J. LAUTERBACH.

VAPOR LAMP AND BURNER.

APPLICATION FILED JAN. 28, 1909.

1,016,639.

Patented Feb. 6, 1912.

2 SHEETS—SHEET 1.

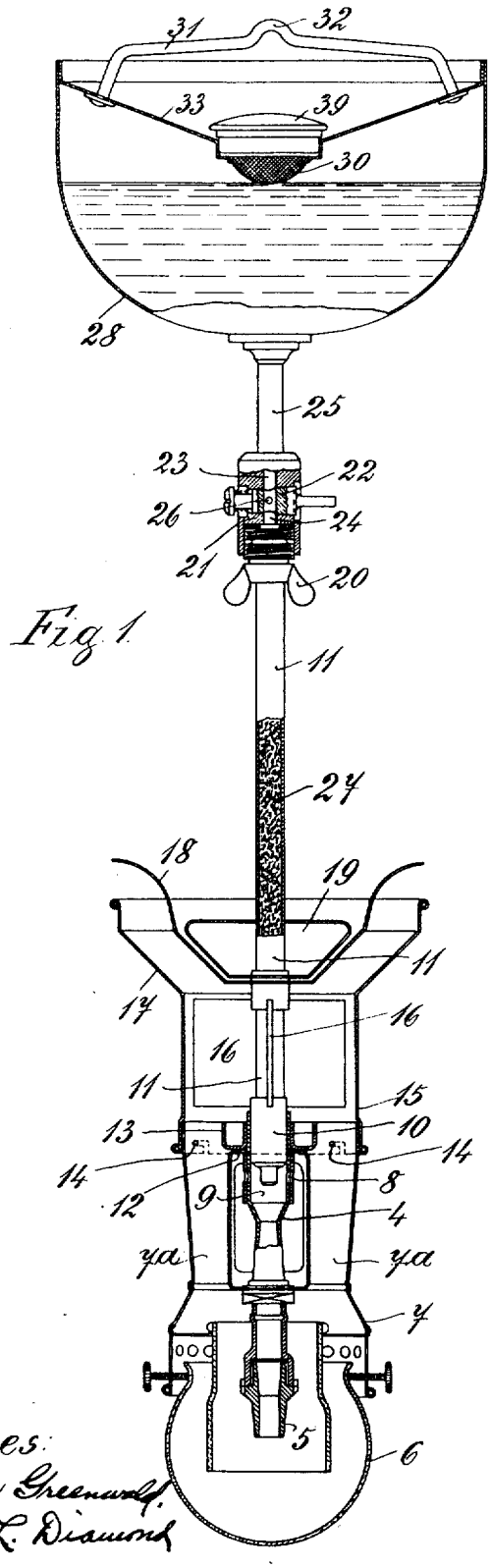

Fig. 1.

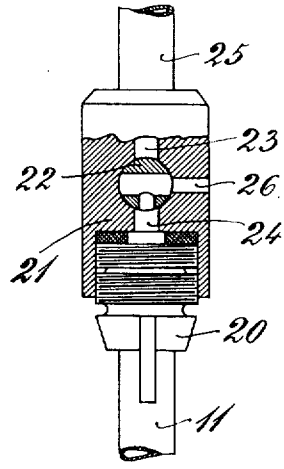

Fig. 2.

Witnesses:
Flora Greenwald
Jacob L. Diamond

Inventors
Eduard Lauterbach and
Josef Lauterbach
by L. K. Böhm,
Attorney.

E. & J. LAUTERBACH.

VAPOR LAMP AND BURNER.

APPLICATION FILED JAN. 28, 1909.

1,016,639.

Patented Feb. 6, 1912.

2 SHEETS—SHEET 2.

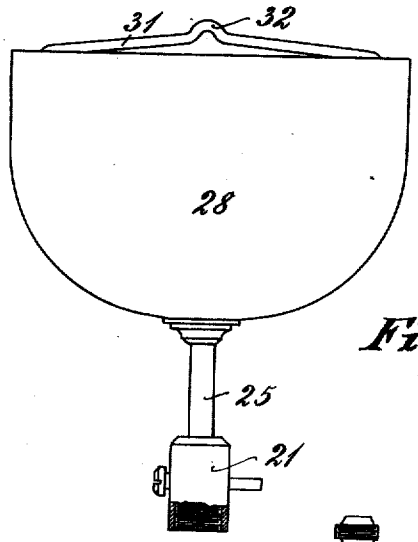

Fig. 3a

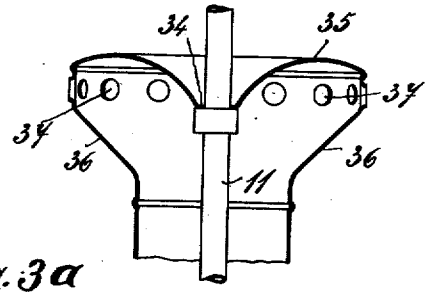

Fig. 4.

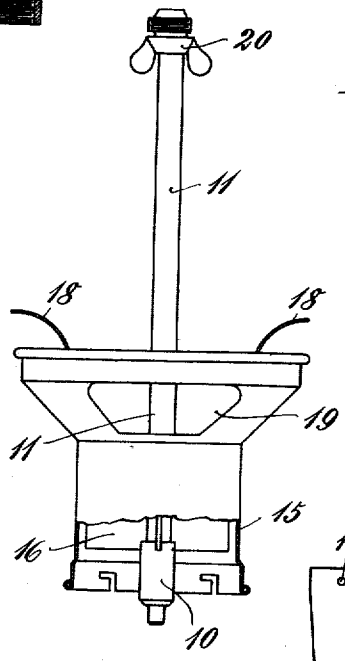

Fig. 3.

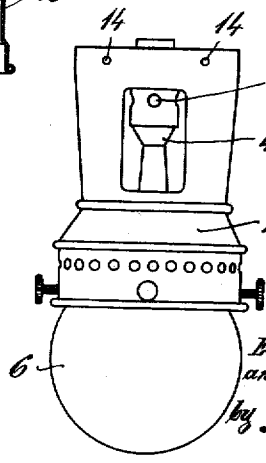

Fig. 3b

Witnesses:
Flora Steinwald.
Jacob L. Diamond.

Inventor:
Eduard Lauterbach
and Josef Lauterbach.
by L. K. Böhm,
Attorney.

COLUMBIA PLANOGRAPH CO., WASHINGTON, D. C.

UNITED STATES PATENT OFFICE.

EDUARD LAUTERBACH AND JOSEF LAUTERBACH, OF BERLIN, GERMANY.

VAPOR LAMP AND BURNER.

1,016,639. Specification of Letters Patent. Patented Feb. 6, 1912.

Application filed January 28, 1909. Serial No. 474,735.

To all whom it may concern:

Be it known that we, EDUARD LAUTERBACH and JOSEF LAUTERBACH, both subjects of the King of Prussia, and residents of 183 Oranienstrasse, Berlin, German Empire, have jointly invented new and useful Improvements in Vapor Lamps and Burners, of which the following is a specification.

This invention relates to vapor lamps and burners and especially to inverted incandescent lamps using vaporized liquid fuel as the combustible.

The object of the present invention is to improve the operation and simplify the construction of such lamps.

According to the present invention the usual elaborate vaporizing apparatus is dispensed with and a part of the supply pipe is formed as a vaporizing tube and is arranged substantially vertically and coaxially with the burner tube. This vaporizing tube is filled with suitable material preferably sharp edged material by which the liquid fuel is divided into small streams and thereby more readily heated. The vaporizer tube is so heated that the temperature rises gradually as the vaporizer tube approaches the nozzle and no intermediate connections are provided between the vaporizer tube and the nozzle.

In vapor lamps it has been found that when the supply of liquid fuel is cut off, the vapor in the vaporizer partly continues to flow to the nozzle and partly condenses. Owing to the atmospheric pressure at the mouth of the nozzle the condensed vapor in the vaporizer could not find an exit and was the cause of considerable difficulties when restarting.

The object of the present invention is also to avoid these difficulties.

The further constructional features of the present invention will be more readily understood from the following description of the form of the invention illustrated in the accompanying drawing, in which:

Figure 1 is an elevation partly in section of a lamp according to the present invention. Fig. 2 is an enlarged detailed view of the two-way cock employed between the liquid fuel supply pipe and the vaporizer tube. Figs. 3 3^a and 3^b are views showing the lamp dismantled in parts, Fig. 4 shows a modified deflector.

In carrying the invention into effect according to the form shown, the burner tube 4 is of the ordinary Bunsen type and carries at its lower end the burner tip 5 on which the mantle is supported. A suitable globe 6 is supported around the burner tip and mantle. This globe is suspended from the chimney casing 7, which in its upper part is divided into two branches 7^a between which the burner tube 4 passes. The space between the branches 7^a forms an air trunk by which air passes to the air ports 8 on the burner tube. Opening into the mixing chamber 9 of the burner tube there is a nozzle 10 with which the vaporizer tube 11 is directly connected. The vaporizer tube is arranged vertically and coaxially with the burner tube 4 so that from its upper end to its lower end it hangs downwardly at all parts of its length. On the upper wall 12 of the air trunk between the chimney branches 7^a there is supported a starting pan 13. This starting pan is in the known manner filled with combustible which is ignited for the purpose of preliminarily heating the vaporizer 11. With this arrangement of preliminary heater the lower part of the pan is air-cooled and thereby evaporation of the liquid fuel in the pan at a greater rate than said evaporator fuel could be burned, is prevented. Such overrapid vaporization of the starting liquid fuel usually takes place immediately after the main burner is ignited and of course this excessive vaporization causes the lamp to smell in an objectionable manner. The upper end of the chimney 7 is provided with pins 14 which take into bayonet joints on the lower edge of a casing 15 which forms an extension of the chimney. This casing is provided for the purpose of concentrating the action of the burned gases ascending from the chimney 7 on a suitable length of the vaporizer tube 11. It will be seen that this concentration and therefore the greatest heating action on the vaporizer tube 11 takes place at that end of the vaporizer tube which is directly connected to the nozzle 10. Within the casing 15 the vaporizer tube 11 is provided with any suitable kind of ribs such as 16 for the purpose of increasing the heating surface exposed to the action of the hot gases.

Above the cylindrical part of the casing 15 there is a widened part 17 in the form of an inverted truncated cone and conveniently within this widened part 17 there is supported from the vaporizer tube 11 a de-

flector plate 18 which has the effect of baffling the hot gases rising through the chamber 15. In this way a double purpose is served. The hot gases are in the first place throttled in their exit from the chamber 15 and prevented from heating the upper part of the vaporizer 11. This upper part therefore is heated only by conduction and forms a preheater to the vaporizer proper which is surrounded by the casing 15. In order to prevent the conduction of too great an amount of heat from the lower vaporizing part to the cock and upper parts of the lamp a cross trunk 19 is provided by which air from the atmosphere may pass to the lower part of the vaporizer 11. It will be understood that the length of the chamber 15 or the position of the deflector plate 18 is determined by the nature of the fuel employed.

On the upper end of the vaporizer tube 11 there is a threaded wing nut 20 engaging in a cock 21. The cock 21 is provided with a two-way barrel 22. In the position shown in Fig. 1 the barrel 22 establishes communication between the upper and lower ports 23 and 24 and thereby allows supply of liquid fuel from the fuel supply pipe 25 to the vaporizer tube 11. In Fig. 2 the cock barrel has been turned through 90° so that the port 24 is placed in communication with the channel 26 in the cock body and thereby the upper end of the vaporizer is placed in communication with the outer air.

In former constructions when the cock closed off the supply of liquid fuel the fuel or vapor in the vaporizer tube could not force its way through the nozzle against the pressure of the atmosphere. When starting the lamp the time required until the vaporizer was brought to the necessary temperature was exceedingly long in consequence of the presence of a large quantity of liquid fuel within the vaporizer. By employing the two-way valve described above which establishes a connection between the air and the upper end of the vaporizer all the liquid in the vaporizer is burned and the lamp gradually extinguishes, when the cock is turned into the position shown in Fig. 2.

It has already been proposed in vaporizers to fill the tube with an absorbent material or with beads, pellets or the like. We have found however that it is preferable to fill the vaporizer tube with sharp edged particles such as small pieces of broken glass, porcelain and the like indicated by the reference letter 27. The sharp edges of the non-porous particles seem to facilitate the vaporization.

The supply pipe 25 is connected to the lower end of the reservoir 28 containing the liquid fuel which may be alcohol, wood spirit, petroleum or the like. The upper end of this reservoir has fixed to it an inverted conical cover 33 which forms a filler for the reservoir and is provided at its center with a cap 39 placed over a sieve or filter 30. A diametrical bar 31 having a curved portion 32 is fixed to the cover 33, so that the hook part 32 does not project for any material distance above the edge of the reservoir 28. The entire lamp is suspended from the bar 31, as can be readily understood.

In Fig. 3 it will be seen how the parts of the lamp may be readily dismantled. By unscrewing the wing nut 20 and rotating the lower lamp part so as to free the pin 14, the three parts of the lamp shown in Fig. 3 may very readily be separated. It will be seen that with this construction the nozzle 10 is fixed directly to the end of the vaporizing tube 11 and passes loosely into the end of the burner tube without threading.

In the deflector plate described with reference to Fig. 1 it will be seen that the hot gases are deflected in two streams sidewise from the chamber 15 so that cool atmospheric air may pass to the central vaporizer tube in the upper part of its length. This is exceedingly important for the purpose of preventing vaporization of the liquid fuel in the upper part of said vaporizer tube. The result desired may be obtained also by means of the deflector illustrated in Fig. 4. In this deflector the vaporizer tube 11 passes centrally upward through the opening 34 in the cover 35 which is placed over the widened inverted conical part 36. By means of this inverted conical cover 35 the hot gases ascending upward are guided to the openings 37 so that the hot gases pass radially outward from the lamp in divided streams. These streams are directed away from the vaporizer tube 11 and we find that the cool air gains access to the upper part of the vaporizer tube through between said streams.

It will be seen that with the construction of vapor lamps according to the present invention that not only is simplicity secured in the lamp itself but all danger of smelling is avoided by avoiding vaporization in the upper part of the vaporizer and also preventing dripping of condensed liquid fuel from the nozzle after the lamp has been extinguished.

We claim:—

1. In an inverted incandescent vapor lamp, the combination of a burner tube having a mixing chamber, a nozzle opening into said mixing chamber, a vaporizer connected at its lower end to said nozzle and arranged substantially vertically and coaxially with said burner tube, a fuel supply pipe connected to said vaporizer, a fuel controlling valve intermediate said pipe and vaporizer, a casing surrounding said mixing chamber so as to form an air admission chamber, a

chimney for the burned gases surrounding said casing and extending upwardly so as to surround the lower part of said vaporizer, and a deflecting plate of inverted substantially frusto-conical form arranged above the open end of said chimney and carried by the vaporizer at an intermediate point of its length so as to protect the upper part of the vaporizer from the heat of the burned gases.

2. In combination, a vapor burner, a vaporizing tube leading to said burner, a chimney surrounding said vaporizer for part of its length at the end nearest to the burner, a deflecting plate supported from said vaporizer tube at the point where it passes out from the chimney, and an air-channel past said deflector plate for cooling the upper part of said vaporizing tube.

3. An inverted incandescent vapor lamp comprising, a liquid fuel reservoir, a vaporizing pipe attachable to said reservoir, a chimney extension at the lower end of said vaporizer pipe and removable therewith, and a lamp globe burner tube, and chimney removable in one piece and supported from said chimney extension so that the burner tube registers with the lower end of the vaporizer tube.

4. In combination, a liquid fuel reservoir, a vaporizing tube connected to said reservoir, a nozzle fixed to the lower end of said tube, a burner tube into the upper end of which said nozzle freely passes, a chimney casing in which said burner is concentrically supported, a chimney extension above said casing forming a heating chamber around the lower end of said vaporizing tube, and means for connecting said chimney casing to the lower end of said chimney extension and simultaneously holding the nozzle within the upper end of the burner tube.

5. An inverted incandescent vapor lamp comprising a burner tube, a vertically-arranged vaporizer having a nozzle at its lower end opening into said burner tube, a liquid fuel supply pipe connected to the upper end of said vaporizer, an air inlet to said vaporizer, and means whereby said vaporizer may be connected either to said pipe or to said air inlet.

6. An inverted incandescent vapor lamp, comprising a vertical burner tube, a nozzle opening to said tube at its upper end, a vertically arranged vaporizer communicating with said nozzle at its lower end, a fuel reservoir connected to the upper end of said vaporizer, and means for admitting a supply of fuel from said reservoir or of air to said vaporizer alternatively.

7. In combination, a liquid fuel reservoir, a liquid fuel supply tube leading from the lower end of said reservoir, a lamp supported from said tube, an inverted conical cover fixed on the upper end of said reservoir, and a cross bar over the base of said conical cover and by which said reservoir tube and lamp are suspended.

In witness whereof we have hereunto set our hands in the presence of two witnesses.

EDUARD LAUTERBACH.
JOSEF LAUTERBACH.

Witnesses:
HENRY HASPER,
WOLDEMAR HAUPT.

Copies of this patent may be obtained for five cents each, by addressing the "Commissioner of Patents, Washington, D. C."