June 2, 1959 J. D. CUDD 2,888,725

GARMENT HOLDER

Filed Feb. 27, 1956

Fig. 1.

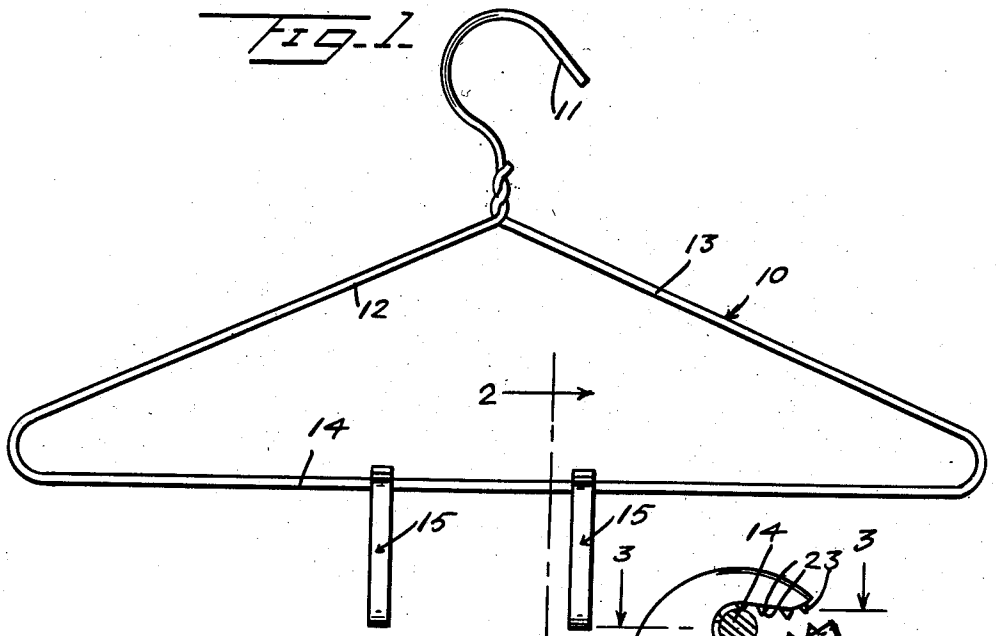

Fig. 3.

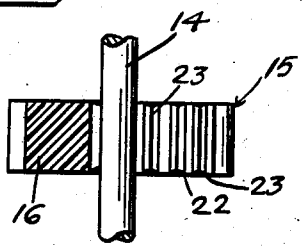

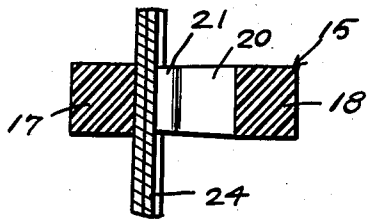

Fig. 4.

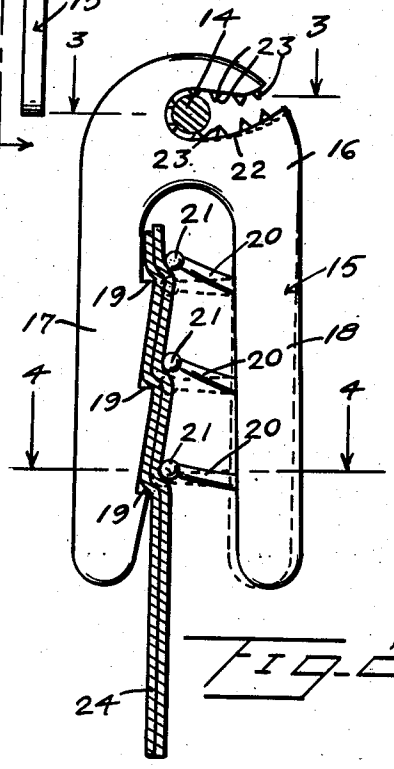

Fig. 2.

INVENTOR

J. D. Cudd

BY Kimmel & Crowell

ATTORNEYS

United States Patent Office 2,888,725 Patented June 2, 1959

2,888,725

GARMENT HOLDER

Joseph D. Cudd, Boise, Idaho

Application February 27, 1956, Serial No. 567,823

1 Claim. (Cl. 24—84)

The present invention relates to garment holders, and more particularly, to garment holders of the type adapted for attachment to clothes hangers for securing garments thereto.

The primary object of the invention is to provide a resilient device adapted to be suspended from a clothes hanger and to frictionally grasp the garments for suspension therefrom.

Another object of the invention is to provide a device of the character described which will grasp the clothes with a firm grip but which will yield to release the clothes prior to pressures sufficient to damage the clothes being applied thereto.

A further object of the invention is to provide a device of the character described above which is formed from a semi-resilient plastic as an integral unit.

A still further object of the invention is to provide a garment holder which is inexpensive to manufacture, simple to use, and durable in service.

Other objects and advantages will become apparent from the following specification when considered in the light of the attached drawings, in which:

Figure 1 is a side elevation of the invention shown attached to a conventional clothes hanger.

Figure 2 is a vertical cross-section taken along the line 2—2 of Figure 1, looking in the direction of the arrows.

Figure 3 is a transverse cross-section taken along the line 3—3 of Figure 2, looking in the direction of the arrows.

Figure 4 is a transverse cross-section taken along the line 4—4 of Figure 2, looking in the direction of the arrows.

Referring now to the drawings in detail wherein like reference numerals indicate like parts throughout the several figures, the reference numeral **10** indicates generally a clothes hanger of conventional wire construction, having a hook **11** formed in its upper terminal end. The hanger **10** is provided with a pair of oppositely sloped bars **12** and **13** extending downwardly from the hook **11** and terminating in a horizontal bar which is integrally secured to each of the sloped bars **12** and **13** at their lower ends.

The clothes hanger **10** is adapted to have a pair of garment holders **15** secured to the horizontal bar **14** and depending therefrom, as illustrated in Figure 1.

The garment holder **15** consists of a body **16** formed of semi-resilient plastic material, with a pair of legs **17** and **18** extending outwardly therefrom in parallel spaced apart relation. The face of the leg **17** adjacent the leg **18** is provided with a plurality of offset teeth **19** in vertically spaced relation. The face of the leg **18** adjacent the leg **17** is provided with a plurality of fingers **20**, with one finger **20** projecting toward each tooth **19** on the leg **17**.

Each of the fingers **20** are provided with a knob **21** formed on the outer extremity thereof which is adapted to cooperate with its adjacent tooth **19** to clamp a garment therebetween.

The body **16** is provided with an arcuate slot **22** which opens through the side of the body **16** overlying the leg **18**, as illustrated in Figure 2. The slot **22** is provided with a plurality of inwardly directed teeth **23** which are adapted to engage over the bar **14** of the garment hanger **10** and assist in securing the bar **14** within the slot **22**. The garment holder **15** is integrally formed by casting or other means as a one piece relatively stiff but resilient device so that the teeth **23** and the fingers **20** might flex to some degree.

When it is desired to use the garment holder **15** a garment indicated at **24** is pressed upwardly between the legs **17** and **18** causing the fingers **20** and knobs **21** to flex upwardly, as illustrated in Figure 2. The weight of the garment **24** acts to frictionally engage the knobs **21** causing them to bind the garment between the knobs **21** and the teeth **19**. To remove the garment **24** from the garment holder **15**, the legs **17** and **18** are flexed outwardly away from each other so that the fingers **20** and knobs **21** are moved to release the garment **24** from the teeth **19** permitting the garment **24** to be removed from the garment holder **15**.

As heavier garments are used with the garment holder **15** it will cause the legs **17** and **18** to flex tending to close the slot **22** thus locking the garment holder **15** more tightly on the horizontal bar **14**.

Having thus described the preferred embodiment of the invention, it should be understood that numerous modifications and structural adaptations might be resorted to without departing from the scope of the appended claim.

What is claimed is:

A garment holder comprising a semi-resilient plastic body, a pair of legs extending integrally from one end of said body in relatively widely spaced parallel relation, said body having a lateral slot extending inwardly from one side edge thereof at the end of said body opposite said legs for engagement about a horizontal bar of a coat hanger, a plurality of sloping teeth directed toward said slot formed on one face of one of said legs confronting the other of said legs, a plurality of flexible resilient fingers extending integrally from one face of said other of said legs confronting said teeth, said fingers each being substantially equal in width to that of said other leg, each of said fingers having a garment engaging knob integrally formed on its free end, one of said knobs being positioned above and adjacent to each of said teeth whereby garments may be clasped between said knobs and said teeth at a plurality of points on said garment, the opening to said slot being narrowed by the springing apart of said legs when the weight of said garments is brought to bear on said legs to lock said holder on said hanger.

References Cited in the file of this patent

UNITED STATES PATENTS

138,088	Reid	Mar. 3, 1874
1,356,785	Patterson	Oct. 26, 1920
2,332,772	Amer	Oct. 26, 1943
2,644,210	McNamee	July 7, 1953

FOREIGN PATENTS

138,687	Australia	Sept. 15, 1950
501,803	Canada	Apr. 27, 1954