Nov. 28, 1933. A. J. PARIS, JR 1,937,242

INTERNAL COMBUSTION ENGINE AND METHOD OF OPERATING SAME

Filed Sept. 2, 1932 2 Sheets-Sheet 1

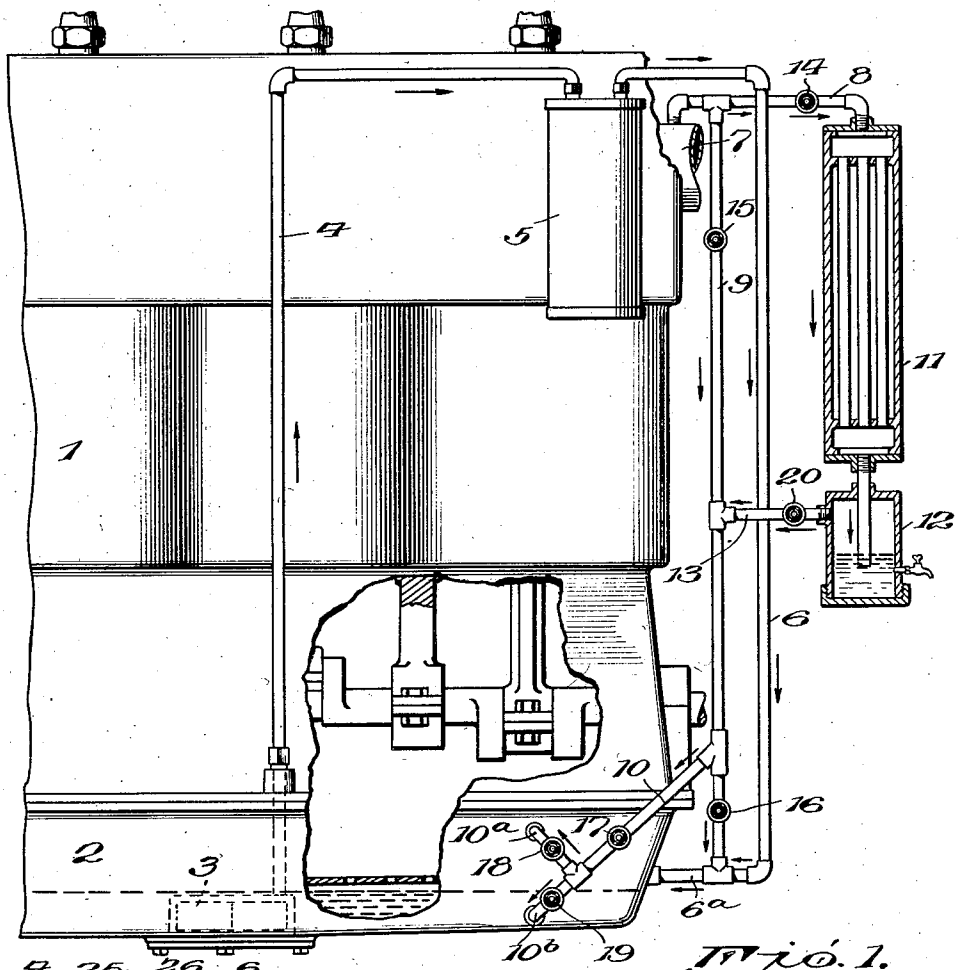


Fig. 1.

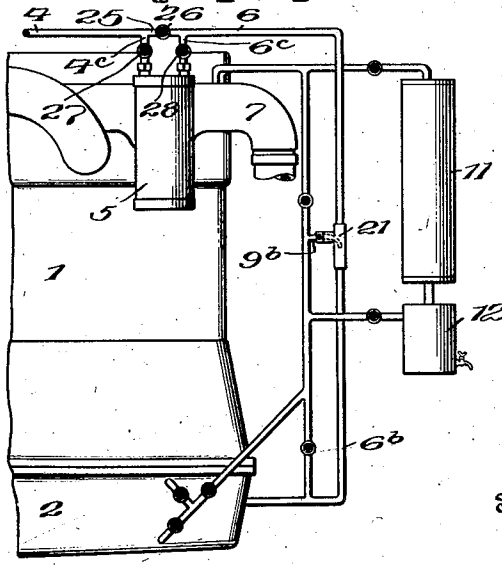


Fig. 2.

Inventor
Auguste J. Paris, Jr.

By Penne, Davis, Marvin & Edmonds
Attorneys

Nov. 28, 1933. A. J. PARIS, JR 1,937,242

INTERNAL COMBUSTION ENGINE AND METHOD OF OPERATING SAME

Filed Sept. 2, 1932 2 Sheets-Sheet 2

Fig. 3.

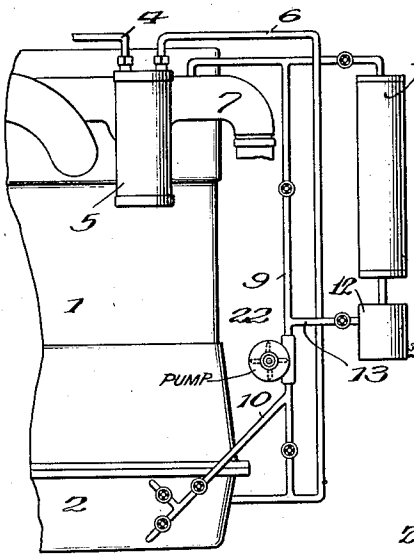


Fig. 5.

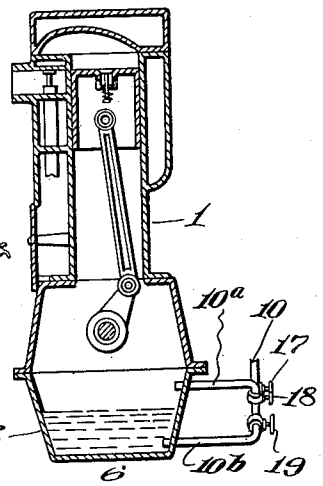


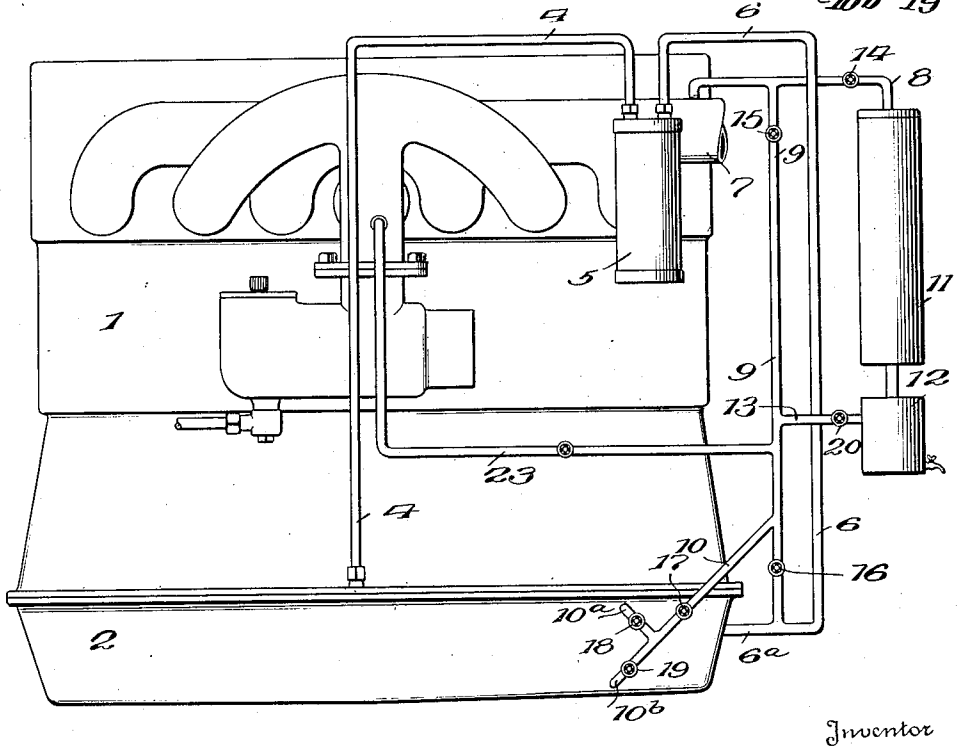


Fig. 4.

Inventor
Auguste J. Paris, Jr;

By Dennis Davis Marvin & Edwards
Attorneys

Patented Nov. 28, 1933 1,937,242

# UNITED STATES PATENT OFFICE

1,937,242

## INTERNAL COMBUSTION ENGINE AND METHOD OF OPERATING SAME

Auguste Jean Paris, Jr., Charleston, W. Va.

Application September 2, 1932. Serial No. 631,552

33 Claims. (Cl. 123—196)

This invention relates to internal combustion engines and to a method of operating the same whereby a smoother and more economical operation of the engine is obtained.

In my copending application Serial No. 592,382, filed Feb. 11, 1932, I have disclosed one method of operating internal combustion engines whereby smoother and more economical operation of the engine is obtained, and in which, if desired, heavy commercial gasoline and the heavier hydrocarbon oils commonly known as kerosene and fuel oils may be satisfactorily used as the fuel, or as one of the constituents of the fuel for internal combustion engines of the type used in automobiles, aircraft, and engines of the Diesel type.

As the heavier hydrocarbon oils contain more calories and consequently more potential energy than the lighter hydrocarbon oils, a method of operating internal combustion engines which permits the use of such heavier hydrocarbon oils naturally results in a more economical operation and the obtaining of more power from the engine. It has been found in actual operation over a substantial period of time, that such heavier hydrocarbon oils are, under proper conditions, more satisfactory for use in automobile and other internal combustion engines than are the light gasolines which are now commonly used, as with such heavy oils the engine runs much smoother and at a lower temperature, is more flexible and gives more power, resulting in greater mileage per gallon of fuel. It has also been found that the carbon produced from the fuel, when the engine is operated in accordance with my invention, is of a different type from that which is commonly formed in the cylinders of internal combustion engines, being soft and readily removed by merely wiping the coated parts of the engine. This carbon has material advantages in the engine because of the lubricating qualities which it exhibits.

In my aforesaid application the improved results are obtained by introducing a portion of the gases from the exhaust manifold into the intake manifold, where they are commingled with the atomized mixture of liquid fuel and air prior to its introduction into the cylinders of the engine.

My present invention relates to a new method of introducing gases from the exhaust manifold into the cylinders of the engine. These gases will be hereinafter referred to as products of combustion, but it is not to be inferred that these gases are necessarily inert.

Whereas my aforesaid application depended entirely upon introducing the products of combustion into the cylinders of the engine through the intake manifold, my present invention provides for the introduction of these gases into the cylinders of the engine from the crank case alone, or in conjunction with their introduction through the intake manifold.

The products of combustion are preferably commingled with the oil in the crank case, so that they will carry into the cylinders of the engine entrained particles of the oil. This commingling of the products of combustion with lubricating or other hydrocarbon oils, causes a change in the oil which produces a smoother operation of the engine due to better lubrication resulting from the production of an oil having properties which prevent loss of viscosity, or an alteration of the crank case oil which possesses those properties, whereby its lubricating value is maintained. When the products of combustion are thus commingled with the lubricating oil, it does not become as black as ordinary crank case oil, nor does it become thin and non-viscous, but, on the other hand, retains all of its lubricating value and acts to seal the rings of the piston as good or better than fresh lubricating oil no matter how long the oil may be used in the engine. By thus reducing leakage past the piston rings, better compression and suction are given to the cylinders of the engine and the power derived therefrom will be correspondingly greater.

Inasmuch as the commingling of the products of combustion with the lubricating oil in the crank case causes the oil to retain its viscosity and lubricating properties, it becomes unnecessary to change the oil as frequently as is now necessary, and it is usually only necessary to add from time to time the amount of oil which is used up, which will be much less than that which is now consumed due to the fact that the oil retains its viscosity. In actual tests, after running thousands of miles, it has been found that the fire-test and viscosity of the oil is equal to or better than the original oil, and that the amount consumed is only approximately 10% as much as the same engine would consume were the products of combustion not commingled therewith in accordance with this invention.

The products of combustion may be commingled with the lubricating oil either before or after it enters the crank case, and if the products of combustion are commingled with the oil after entering the crank case, they may enter either above or below the oil level.

The products of combustion may be taken di-

rectly from the exhaust manifold for commingling with the lubricating oil, but they are preferably cooled and separated from entrained solid particles and water vapor.

The products of combustion may be injected into the lubricating oil either by the pressure existing in the exhaust manifold, or other means for causing the commingling of the gases with the oil such as a pump or suction nozzle may be provided to force or draw the products of combustion from the exhaust manifold and cause their commingling with the oil.

On the suction stroke of the engine the products of combustion from the crank case will pass the piston rings and enter the cylinders of the engine where they will commingle with the air and atomized fuel therein, to form an explosive mixture from which the aforesaid benefits in the operation of the engine will be obtained. Also, the lubricating oil will absorb a portion of the products of combustion and, on the suction stroke of the engine, the products of combustion absorbed by the film of oil on the walls of the cylinder will be released and will commingle with the fuel mixture in the cylinder. The gases may also be introduced into the engine cylinders through valves in the piston heads, such pistons being well known.

The invention will be further described in connection with the accompanying drawings, but it is to be understood that this further description and disclosure are by way of exemplification and the invention is not limited thereto except as pointed out in the appended claims.

In the drawings, Figure 1 diagrammatically represents an elevational view of a portion of an internal combustion engine embodying the present invention;

Fig. 2 is a modification showing the use of suction means for causing the introduction of the products of combustion into the oil;

Fig. 3 is another modification showing a pump for forcing the products of combustion into the lubricating oil;

Fig. 4 is a view similar to Fig. 1 showing another method of operating the internal combustion engine; and

Fig. 5 is a cross sectional view through an internal combustion engine embodying the present invention.

In the drawings, the numeral 1 indicates generally an internal combustion engine having the usual crank case 2 which is provided with a pump 3 for causing the circulation of a portion of the oil through the pipe 4 to the oil filter 5, and back to the crank case through the pipes 6 and 6*a*. The oil from the crank case will also be pumped to the various points which require lubrication, but as that portion of the lubricating systems forms no part of my invention such means is not shown.

The engine is provided with the usual exhaust manifold 7 from which any desired portion of the products of combustion are withdrawn through the pipe 8. These products of combustion may pass directly to the crank case through the pipes 9, 10, 10*a*, 10*b* and 6*a*, or may first be passed through a heat-interchanger 11 where they are cooled, and then through a separator 12 where condensed water and entrained solid particles are separated. When the gases are thus cooled and cleaned before being introduced into the crank case, they will pass from the separator 12 through the pipe 13 to the pipe 9 for introduction into the crank case. Suitable valves 14, 15, 16, 17, 18, 19 and 20 are provided in the pipes 8, 9, 10, 10*a*, 10*b* and 13 whereby the desired circulation of the products of combustion may be obtained.

The products of combustion from the exhaust manifold 7 may be commingled with the oil either in the crank case, or before it enters the crank case. If it is desired to commingle the products of combustion with the oil in the crank case, this may be done by introducing them therein either above or below the oil level which is indicated by the dotted line L. When it is desired to commingle the products of combustion with the oil before it enters the crank case, valves 17, 18 and 19 will be closed and valve 16 opened so that the products of combustion will pass from pipe 9 into the stream of oil passing from the oil filter 5 through the pipe 6 to the crank case. On the other hand, if it is desired to commingle the products of combustion with the oil in the crank case, valve 16 will be closed and valve 17 and either valve 18 or 19 opened, depending upon whether or not the products of combustion are to enter the crank case above or below the oil level. If valves 18 and 19 are both opened, a portion of the products of combustion will be introduced into the crank case below the level, while another portion will enter above the oil level.

While it is preferred to at least partially cool and to separate water and/or acid vapors and entrained particles from the products of combustion before they are commingled with the lubricating oil, this is not absolutely essential, as greatly improved results can be obtained without first cooling and cleaning the gases. When the gases are to be cooled and cleaned before they are commingled with the oil, valve 15 will be closed and valves 14 and 20 opened so that the gases will pass from the exhaust manifold 7 through the pipe 8, heat-interchanger 11, separator 12, pipe 13 and the lower portion of the pipe 9 to commingle with the oil passing from the oil filter to the crank case. When this cooling and cleaning of the gases is not desired, it is only necessary to close the valves 14 and 20 and open valve 15 so that the products of combustion will pass directly from the pipe 8 through valve 15 in pipe 9 to commingle with the oil.

In some cases it may not be desired to rely entirely upon the pressure in the exhaust manifold to force a portion of the products of combustion into the lubricating oil. In Fig. 2 I have shown a suction means for causing a commingling of the products of combustion with the oil, and in Fig. 3 I have shown a pump for forcing a portion of the products of combustion into the oil.

Referring to Fig. 2 it will be noted that the pipe 6*b* which conducts the lubricating oil from the oil filter to the crank case, has an injection nozzle 21 formed in one side thereof through which the products of combustion from the pipe 9*b* pass into the oil stream to be commingled therewith before it is injected into the crank case of the engine. The flow of the oil past the nozzle 21 will be sufficient to suck a sufficient amount of the products of combustion into the oil stream and to simultaneously cause a commingling of the oil and products of combustion.

In Fig. 3 the pipe 9 is provided with a pump 22 between the point at which the pipe 13 communicates with the pipe 9 and the point at which pipe 10 leads from the pipe 9 to the crank case. This pump will forcibly inject the products of combustion into the oil regardless of whether they

are commingled with the oil before or after it enters the crank case.

In Fig. 4 there is shown an arrangement whereby the products of combustion may be introduced into the cylinders of the engine shown in Figure 1, both from the crank case and from the intake manifold. In this figure the parts are similar to those shown in Figure 1 and bear the same reference characters, but the engine in this instance is provided with a pipe 23 which leads from the pipe 9 to the intake manifold whereby the products of combustion may be introduced into the cylinders of the engine through the intake manifold, where they will commingle with the explosive mixture of air and liquid fuel, as well as through the crank case.

Due to the improved operation of the engine when operated in accordance with the present invention, it is not necessary that the oil be passed through the oil filter 5, and if desired this filter may be entirely eliminated or cut out. In Fig. 2 here is shown a pipe 25 making a direct connection between the pipes 4 and 6 whereby the filter may, if desired, be eliminated. The pipe 25 is provided with a valve 26 and pipes 4c and 6c which lead into the oil filter 5 are provided with similar valves 27 and 28 so that by suitable manipulation of these valves, the filter may be either used or not used as desired.

While particular stress has been laid upon the use of heavy hydrocarbon oils in connection with the operation of internal combustion engines, the invention is not limited to the use of such heavy oils as improved advantages are also obtained when ordinary light gasoline is used as the motor fuel. However, the use of heavy hydrocarbon oils has the advantage of providing a fuel having a greater number of calories per unit, and as the heavier fuels are generally cheaper than the lighter and more refined fuels, their use also renders the operation of the engine more economical.

What I claim is:

1. In the method of operating internal combustion engines the step which comprises withdrawing a portion of the products of combustion, passing at least a portion of said withdrawn products of combustion into the crank case of the engine, and then introducing at least a portion of the products of combustion from the crank case into the cylinders.

2. In the method of operating internal combustion engines the steps which comprise withdrawing a portion of the products of combustion, cooling at least a portion of the withdrawn products of combustion below that temperature at which the oil will crack under the existing conditions, commingling at least a portion of said cooled products of combustion with a relatively heavy hydrocarbon oil, and then introducing at least a portion of the products of combustion which were commingled with the oil into the cylinders of the engine.

3. In the method of operating internal combustion engines the steps which comprise withdrawing a portion of the products of combustion, maintaining a circulating stream of lubricating oil for the engine from the crank case and back again, commingling at least a portion of said withdrawn products of combustion with the oil in said circulating stream prior to its reintroduction into the crank case, introducing at least a portion of the products of combustion commingled with the oil into the crank case and then introducing at least a portion of the products of combustion from the crank case into the cylinders of the engine.

4. In the method of operating internal combustion engines the steps which comprise withdrawing a portion of the products of combustion, commingling at least a portion of said withdrawn products of combustion with the lubricating oil in the crank case of the engine, and then introducing at least a portion of the products of combustion from the crank case into the cylinders of the engine.

5. In the method of operating internal combustion engines the steps which comprise withdrawing a portion of the products of combustion, passing at least a portion of said withdrawn products of combustion into the crank case of the engine, partially below the oil level therein and partially above the oil level, and then introducing at least a portion of the products of combustion from the crank case to the cylinders of the engine.

6. In the method of operating internal combustion engines the steps which comprise withdrawing a portion of the products of combustion, passing at least a portion of said withdrawn products of combustion into the crank case of the engine above the level of the oil therein, and then introducing at least a portion of the products of combustion from the crank case into the cylinders of the engine.

7. In the method of operating internal combustion engines the steps which comprise withdrawing a portion of the products of combustion, passing at least a portion of said withdrawn products of combustion into the crank case of the engine below the oil level therein, and then introducing at least a portion of the products of combustion from the crank case into the cylinders of the engine.

8. In the method of operating internal combustion engines the steps which comprise withdrawing a portion of the products of combustion, passing at least a portion of said withdrawn products of combustion into the crank case of the engine, and then passing at least a portion of the products of combustion past the pistons into the cylinders of the engine.

9. In the method of operating internal combustion engines the steps which comprise withdrawing a portion of the products of combustion from the exhaust manifold, passing at least a portion of said withdrawn products of combustion directly from the exhaust manifold to the crank case of the engine, and then introducing at least a portion of said products of combustion from the crank case into the cylinders of the engine.

10. In the method of operating internal combustion engines the steps which comprise withdrawing a portion of the products of combustion, cooling at least a portion of said withdrawn products of combustion and passing at least a portion of the cooled products of combustion into the crank case of the engine, and then introducing at least a portion of the products of combustion from the crank case into the cylinders of the engine.

11. In the method of operating internal combustion engines the steps which comprise withdrawing a portion of the products of combustion, cooling and separating entrained solid particles from at least a portion of the withdrawn products of combustion, passing said cooled and cleaned products of combustion into the crank

case of the engine, and then introducing at least a portion of the products of combustion from the crank case into the cylinders of the engine.

12. In the method of operating internal combustion engines the steps which comprise withdrawing a portion of the products of combustion, passing a portion of said withdrawn products of combustion into the intake manifold for commingling with the mixture of air and atomized liquid fuel, passing another portion of the withdrawn products of combustion into the crank case of the engine, and passing at least a portion of the products of combustion from the crank case into the cylinders of the engine.

13. In an internal combustion engine, means for passing a portion of the products of combustion into the crank case and from the crank case into the cylinders.

14. In an internal combustion engine, means for passing a portion of the products of combustion into the crank case and from the crank case past the pistons into the cylinders.

15. In an internal combustion engine, means for withdrawing a portion of the products of combustion, means for commingling at least a portion of said withdrawn products of combustion with a relatively heavy hydrocarbon oil, means for cooling a portion of the withdrawn products of combustion which is commingled with the hydrocarbon oil to a degree below that at which the oil will crack under the existing conditions prior to such commingling, and means for thereafter introducing at least a portion of the products of combustion, which were commingled with the oil, into the cylinders.

16. In an internal combustion engine, means for maintaining a circulating stream of lubricating oil from the crank case and back again, means for passing a portion of the products of combustion into the circulating stream of lubricating oil prior to its re-introduction into the crank case, and means for passing at least a portion of said products of combustion from the crank case into the cylinders.

17. In an internal combustion engine, means for passing a portion of the products of combustion into the crank case of the engine below the oil level therein whereby said products of combustion commingle with the lubricating oil therein, and means for thereafter passing at least a portion of said products of combustion into the cylinders.

18. In an internal combustion engine, means for passing a portion of the products of combustion into the crank case above the level of the oil therein, and means for passing at least a portion of said products of combustion from the crank case into the cylinders.

19. In an internal combustion engine, means for withdrawing a portion of the products of combustion, means for cooling at least a portion of said withdrawn products of combustion, and means for introducing at least a portion of said cooled products of combustion into the crank case and from the crank case into the cylinders.

20. In an internal combustion engine, means for withdrawing a portion of the products of combustion, means for cooling and separating entrained solid particles from at least a portion of said withdrawn products of combustion, and means for introducing at least a portion of said cooled and cleaned products of combustion into the crank case and from the crank case into the cylinders.

21. In an internal combustion engine, means for withdrawing a portion of the products of combustion, means for passing a portion of the withdrawn products of combustion into the crank case, and means for passing a second portion of the withdrawn products of combustion into the intake manifold, whereby portions of the products of combustion may be simultaneously introduced into the cylinders from the crank case and from the intake manifold.

22. In an internal combustion engine, means for withdrawing a portion of the products of combustion, a pump for forcibly injecting withdrawn products of combustion into the crank case, and means for passing withdrawn products of combustion from the crank case into the cylinders.

23. In an internal combustion engine, means for maintaining a circulating stream of lubricating oil, a conduit for withdrawing portions of the products of combustion from the exhaust manifold, one end of said conduit communicating with the exhaust manifold and the other end terminating in an injection nozzle leading into the circulating stream of lubricating oil, whereby the circulation of the oil causes a portion of the products of combustion to be withdrawn from the exhaust manifold and commingled with the circulating stream of oil, passing said commingled products of combustion and oil into the crank case of the engine, and means for passing at least a portion of the products of combustion from the crank case into the cylinders.

24. The method of treating relatively heavy hydrocarbon oils to alter their properties, which comprises introducing into said hydrocarbon oils products of combustion from an internal combustion engine which have been cooled to a temperature below that at which the oil will crack under the existing conditions.

25. The method of improving the properties of lubricating oil which comprises introducing into said lubricating oil products of combustion from an internal combustion engine whch have been cooled to a temperature below that at which the oil will crack under the existing conditions.

26. The method of treating oil for use in the lubrication of the cylinders of internal combustion engines, whereby any such oil that enters the combustion chamber will not be so converted as to form hard carbon as one of the conversion products, which comprises introducing into said oil products of combustion from the engine which have been cooled to a temperature below that at which the oil will crack under the existing conditions.

27. In the method of operating internal combustion engines without the deposition of hard carbon in the combustion chamber, the steps which comprise maintaining a supply of lubricating oil, introducing into said supply of lubricating oil products of combustion from the engine, which have been cooled to a temperature below that at which the oil will crack under the existing conditions, and passing oil from said supply onto the walls of the cylinders of the engine.

28. In the method of operating internal combustion engines, the steps which comprise withdrawing a portion of the products of combustion, cooling at least a portion of the withdrawn products of combustion, passing at least a portion of said cooled products of combustion into the intake manifold for commingling with the mixture of air and atomized liquid fuel therein, passing another portion of the cooled products of combustion into the crank case of the engine, and

passing at least a portion of the products of combustion from the crank case into the cylinders of the engine.

29. In the method of operating internal combustion engines, the steps which comprise withdrawing a portion of the products of combustion, cooling at least a portion of the withdrawn products of combustion sufficiently to cause separation of water therefrom, passing a portion of the products of combustion from which water has been separated into the intake manifold for commingling with the mixture of air and atomized liquid fuel therein, passing another portion of the products of combustion from which the water has been separated into the crank case of the engine, and passing at least a portion of the products of combustion from the crank case into the cylinders of the engine.

30. The method of treating relatively heavy hydrocarbon oils to alter their properties, which comprises introducing into a body of the liquid oil products of combustion from an internal combustion engine.

31. The method of treating relatively heavy hydrocarbon oils to alter their properties, which comprises introducing into a body of such liquid oils products of combustion from an internal combustion engine which have been cooled to a temperature at which water may be separated therefrom.

32. In the method of operating internal combustion engines the steps which comprise withdrawing a portion of the products of combustion, cooling at least a portion of the withdrawn products of combustion to a temperature at which water may be separated therefrom, commingling at least a portion of said cooled products of combustion with a relatively heavy hydrocarbon oil and then introducing at least a portion of the products of combustion which were commingled with the oil into the cylinders of the engine.

33. In the method of operating internal combustion engines the steps which comprise withdrawing a portion of the products of combustion, commingling at least a portion of said products of combustion with a relatively heavy hydrocarbon oil by introducing said products of combustion into a body of the liquid oil, and then introducing at least a portion of the products of combustion which were commingled with the oil into the cylinders of the engine.

AUGUSTE JEAN PARIS, JR.