Oct. 25, 1927. 1,646,540

N. C. JOHNSON

METHOD AND APPARATUS FOR MIXING

Filed March 31, 1926 3 Sheets-Sheet 1

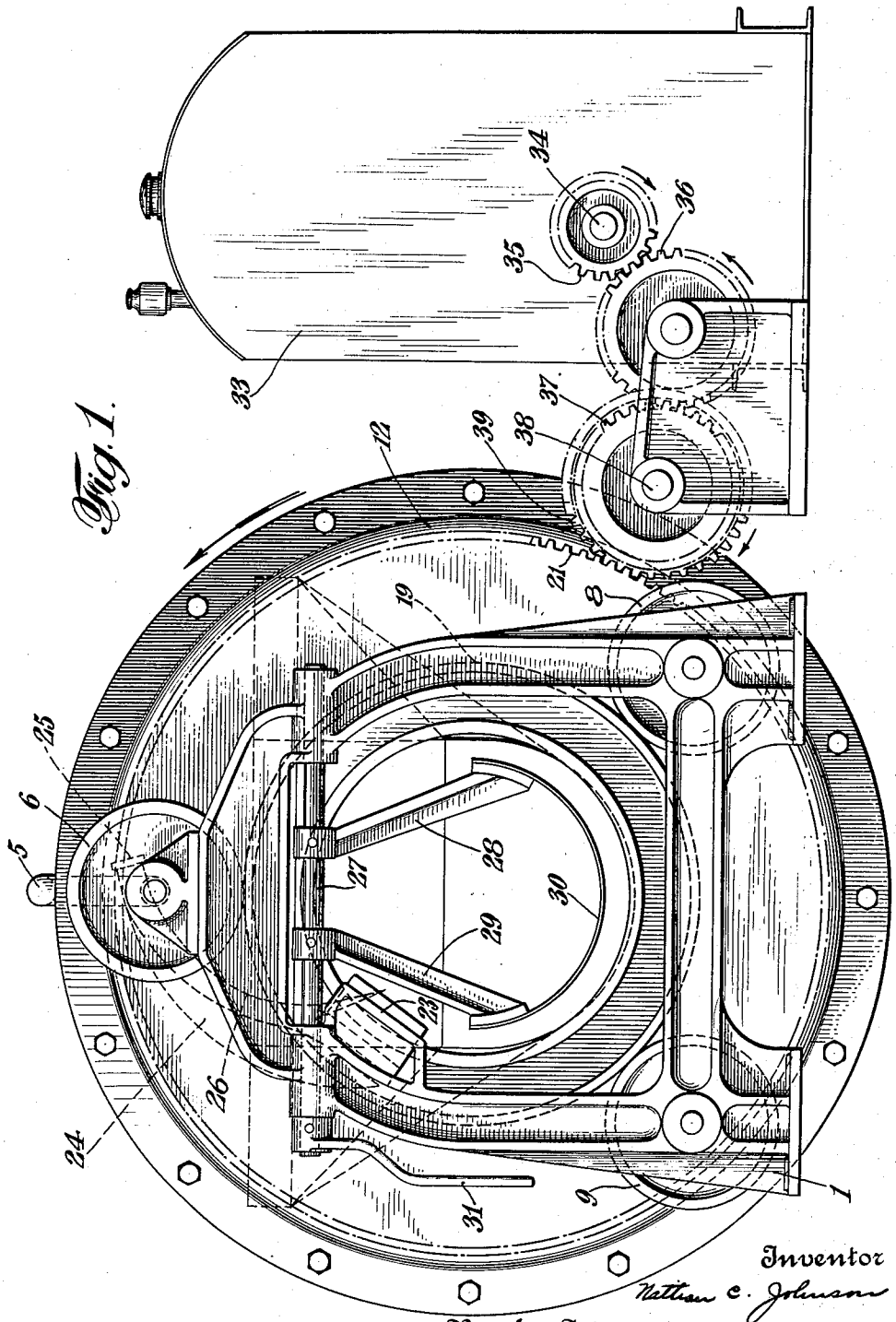

Inventor
Nathan C. Johnson
By his Attorneys
Thos Cosby & Smith

Oct. 25, 1927. 1,646,540

N. C. JOHNSON

METHOD AND APPARATUS FOR MIXING

Filed March 31, 1926 3 Sheets-Sheet 2

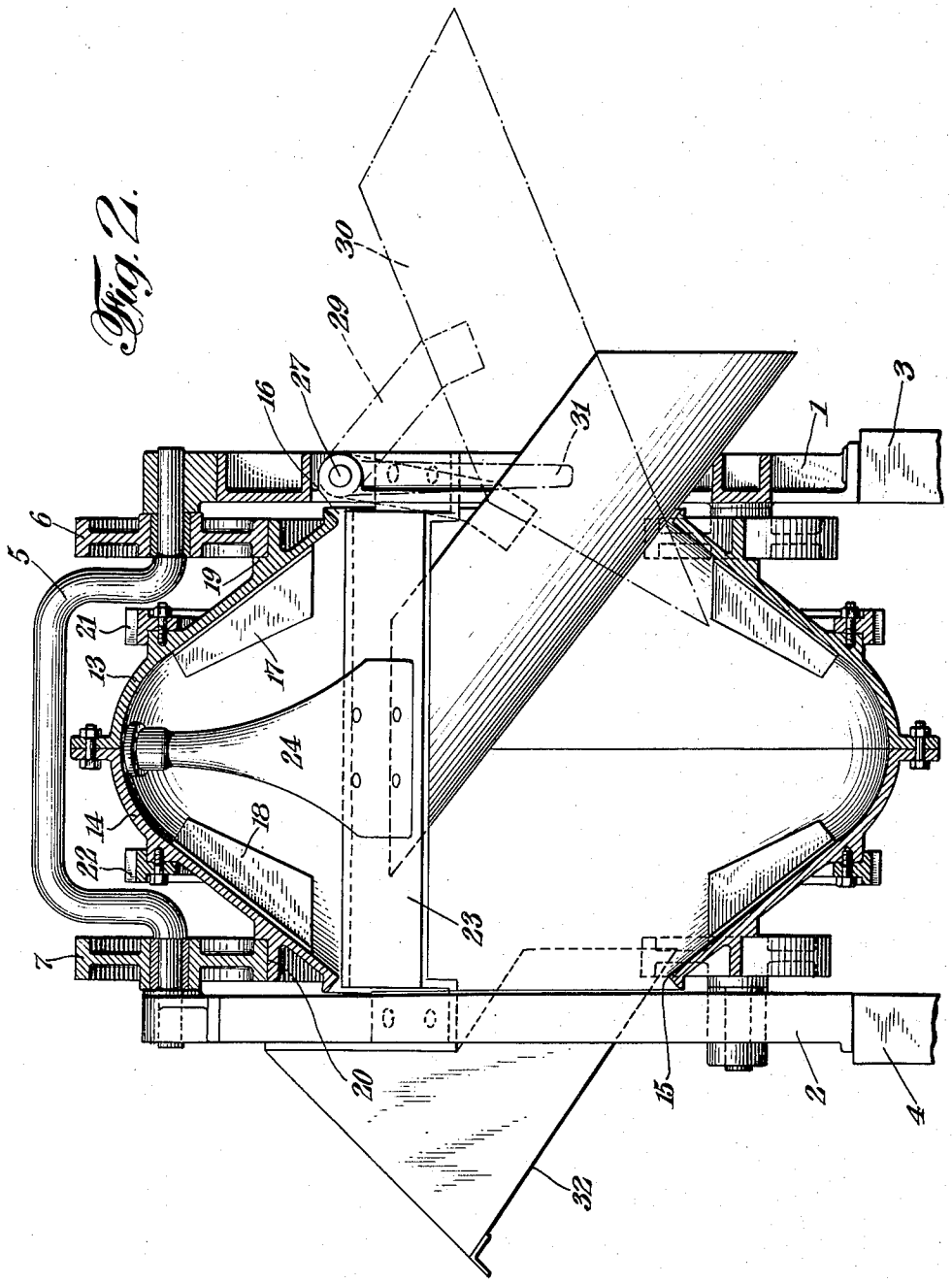

Inventor
Nathan C. Johnson
By his Attorneys
Watson Cooley & Smith

Oct. 25, 1927. 1,646,540

N. C. JOHNSON

METHOD AND APPARATUS FOR MIXING

Filed March 31, 1926 3 Sheets-Sheet 3

Fig. 3.

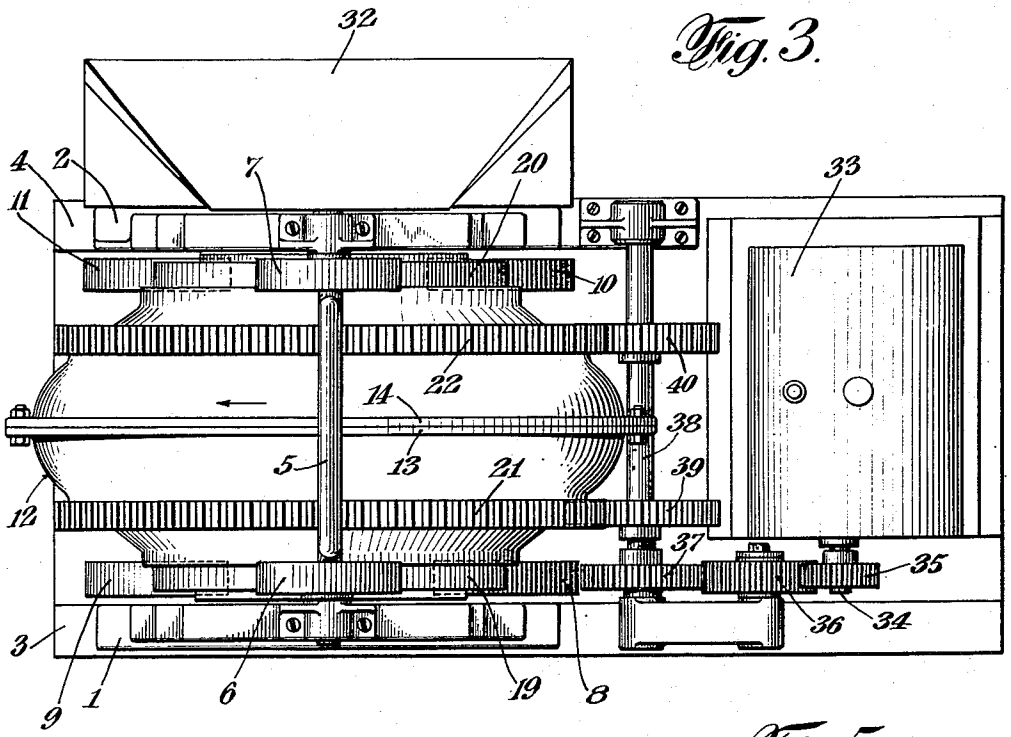

Fig. 4.

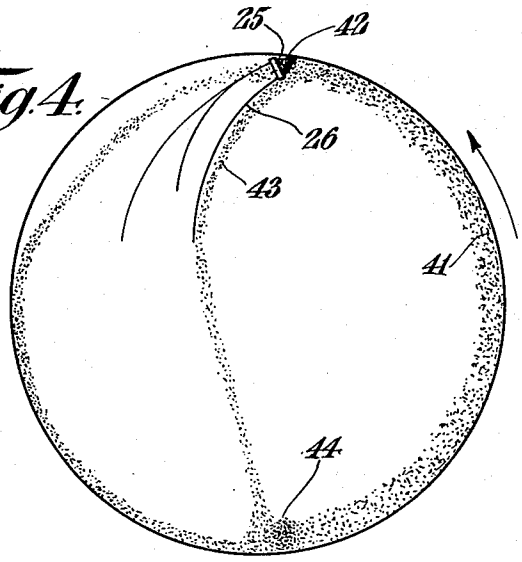

Fig. 5.

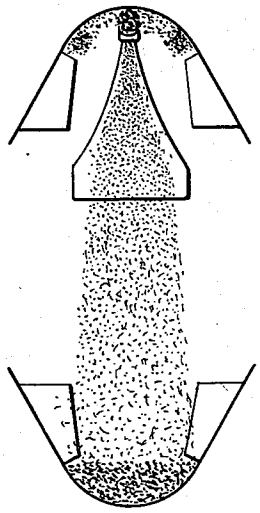

Inventor
Nathan C. Johnson

By his Attorneys
Ward Cosby & Smith

Patented Oct. 25, 1927. 1,646,540

UNITED STATES PATENT OFFICE

NATHAN C. JOHNSON, OF ENGLEWOOD, NEW JERSEY.

METHOD AND APPARATUS FOR MIXING.

Application filed March 31, 1926. Serial No. 98,691.

My invention relates to methods of and apparatus for mixing together a plurality of ingredients, and it is especially useful in mixing concrete.

While the invention is particularly adapted to the mixing of cement or concrete, it is nevertheless, in its broader aspects, useful in the mixing of other materials.

As illustrative of the difficulties encountered in mixing, reference will be made to the mixing of concrete, by way of example.

Heretofore, concrete has been mixed in various ways and by different kinds of apparatus. The machine now most generally used for mixing concrete consists of a slowly rotating horizontal or inclined drum open at each end or at one end, and carrying inner blades or blades and buckets which cut the mass, elevate it to a certain distance, from whence by gravity it is spilled back to the bottom of the drum, in repeated cycles until the mixture is adjudged made. The unmixed ingredients are fed in at one end and the mass is discharged either at the other end through a suitable chute moved into position to receive the mass as spilled from the buckets, or through tilting of the drum. Machines of this type are slow in operation and output and are clumsy.

Various other machines have been used, such for example as one having a series of spiraled mixing paddles which rotate slowly in an open trough, mingling the mass while conveying it through the machine. Due to the mixing actions of such machines, it is impossible with them to obtain a proper quality of the mix, such as concrete in the comparatively short period of time (½ to 1 minute) allowed in practice for mixing a batch; and when concrete is thus not properly mixed, its structure is not uniform, homogeneous and dense in texture, but is, on the contrary, heterogeneous, non-uniform, porous and weak. Inasmuch as the output of a concrete mixing machine directly affects the cost and speed of building concrete structures, and as its quality determines their values and endurance, it is important to provide mixers having not only a large output, but also those that by their mixing action shall produce material having the character desired.

The mixing of concrete by utilizing the action of centrifugal force to a greater or less degree has been described from time to time in patents. Also in my invention set forth in U. S. Letters Patent No. 1,318,282, granted October 7, 1919, there is disclosed an improvement over these proposed devices according to which invention as applied by way of example to the mixing of concrete, the mass of ingredients is subjected to strong centrifugal force and is moved at high velocity and is compacted, in such manner as to effect interparticle attrition and a rapid mixture of the ingredients without undue aeration.

But in the apparatus of my said prior invention certain parts are subjected to great abrasive action, necessitating frequent replacement of parts.

This invention is in the nature of an improvement over my said prior invention, and is intended to minimize said objection. The improvement resides, not only in the novel and efficient method, but also in the novel and efficient apparatus for carrying out the same.

My invention consists in the process hereinafter set forth according to the preferred manner of practicing the same, and in the novel features and combinations of parts hereinafter shown and described in their preferred forms; and the invention is more particularly set forth in the appended claims.

Further objects and advantages of the invention will more fully appear from the following description and the accompanying drawings illustrating the preferred form of mixing machine.

In carrying out my invention, I effect interparticle attrition sufficient to scour all particles, and compacting of the mass sufficient to release entrained air under the action of centrifugal force and high velocity mass flow. This interparticle attrition is sufficiently violent to elevate the temperature of the mass; to scour the inert particles and remove from their surfaces dirt and foreign coatings; to scour the cement particles and remove any preuse surface hydrations, to break off weakly attached parts, and to break down and comminute fragile particles; to break up and separate small lumps or groupings of cement particles; and to thoroughly mix the cement and water so as to form a cementitious fluid of superior hydration with which the inert particles are intimately contacted, while the compacting squeezes out the mass air cells released by scouring of particles, so that in a mixing operation of brief duration a batch of

thoroughly mixed concrete having uniform consistency and improved strength is produced.

According to the preferred manner of practicing my process, as for example in the mixing of Portland cement with water, sand and stone or gravel for forming concrete, I place the ingredients in a suitable rotary container, preferably having a substantially horizontal axis of rotation and in the general form of an annulus, thereby providing openings at each end, and while the ingredients are being placed therein, or after they have been placed therein, the container is rotated rapidly so as to subject the batch while contained therein to high velocity peripheral mass flow. Under the momentum of the mass, it is caused to circulate at a high velocity in what would be a continuous peripheral path, except for the mass deflecting means provided, whereby a portion of the mass flow is arrested and caused to form a diverting wedge of the ingredients themselves, which serves to divert the mass from its peripheral path. The mass is thereby moved at a high velocity in a steady continuous stream along one or more predetermined paths rapidly changing in direction, in such manner as to produce compacting of the mass during said circulation together with violent interparticle attrition so as to rapidly scour all particles of the mass and thoroughly mix and incorporate the same with the cement and water in a substantial uniform mass without undue aeration. In addition to the uniform and efficient product resulting therefrom, my invention provides an efficient and unique method of producing the same; and the apparatus employed is free from the objectionable necessity of replacing parts due to abrasive wear to be found in apparatus heretofore employed.

The preferred manner of carrying out the process will be more readily understood from the following description taken in connection with the accompanying drawings illustrating the preferred form of machine for carrying out the process, and also forming a part of my invention, and in which—

Fig. 1 is an elevation of the discharge end of the apparatus,

Fig. 2 is a side elevation with parts of the mixing container wall broken away showing the interior thereof, and with other parts of the apparatus in section,

Fig. 3 is a plan view of the apparatus,

Fig. 4 is a diagrammatic view showing the action of the ingredients being mixed, viewed in front elevation, and

Fig. 5 is a diagrammatic view showing the materials being mixed, and viewed as a side elevation.

Referring to the drawings, and more particularly to Figs. 1 and 2, a suitable support, comprising the frames 1 and 2, is provided for carrying the various parts of the apparatus to be described following, and is adapted to be securely fastened, as by bolts, to a suitable base such as at 3 and 4. The upper portions of the frames 1 and 2 are attached together by means of cross member 5, which provides, adjacent the respective frames 1 and 2, axle portions supporting the respective trunnion wheels 6 and 7, which are free to rotate thereon. Adjacent the lower portion of the frame 1 are mounted trunnion wheels 8 and 9 rotatably supported on suitable spindles carried by this frame; and in a corresponding position adjacent frame 2 are mounted trunnion wheels 10 and 11 (Fig. 3) rotatably supported on spindles carried by frame 2. The trunnion wheels 6—8—9 and 7—10—11 are adapted to support the mixing container in a manner to be more fully described following.

The mixing container, as a unit, will be designated as 12; and in the present embodiment, to facilitate its manufacture, is formed in two parts 13 and 14 attached together by annular external flanges secured together by suitable bolts. The container is in the general form of an annulus, thereby providing a substantially large inlet opening 15 and a substantially large outlet opening 16. In section the container is V-shaped, with the apex of the V preferably slightly rounded. Suitable impeller blades 17 and 18 are rigidly attached to the respective side walls of the container preferably arranged concentric to the axis of rotation thereof. These blades extend down the sides of the V approximately to that point of the container wall defined by the rounded portion of the container. It will therefore be seen that in the interior of the container an uninterrupted peripheral wall portion is formed at the apex of the V section.

The container section 13 is provided with an exterior outwardly extending annular flange forming a trunnion track 19, whose external diameter is tangent to the trunnion wheels 6, 8 and 9; and the container section 14 is provided with a corresponding trunnion track 20, similarly formed, and whose external diameter is tangent to the trunnion wheels 7, 10 and 11. The container section 13 is provided with an annular boss to which is securely attached an annular external gear 21; and the container section 14 is provided with a corresponding annular boss to which is securely attached the annular external gear 22. The gears 21 and 22 serve as a means by which the container may be rotated, in a manner to be described more fully following.

A cross piece 23 is rigidly attached at its opposite ends to the respective supporting frames 1 and 2, and extends through the openings 16 and 17 of the annular container 12. A stationary arm 24 is rigidly attached

at its lower extremity to the mid-point of the cross piece 23 and its axis is disposed substantially coincident with the plane extending through the peripheral apex of the container 12, which plane is substantially normal to the axis of rotation of the container. The upper end of the arm is provided with a face portion 25, preferably formed of abrasive resisting material, such for example as manganese steel, and is located at approximately the zenith of the peripheral apex of the container. This face is inclined somewhat rearwardly from its lower extremity upwardly, and its upper extremity is rounded to conform to the peripheral apex of the container, from which it is spaced about $\frac{1}{32}''$. The front of the arm 24 provides a deflecting portion 26 which extends from adjacent the face 25 downwardly and rearwardly and flares outwardly in a downward direction, thereby providing a deflecting surface which increases in width from the top to the bottom. The deflecting portion 26 extends down somewhat below the point of attachment of the arm 24 with the cross piece 23, and its formation is such that if extended, it would intersect the periphery of the container approximately at its nadir. A torque shaft 27 is journaled in suitable bearings formed in the supporting frame 1 and extends across the outlet end of the container 12, adjacent the top of the opening 16. Suitable supporting arms 28 and 29 are rigidly attached to the shaft 27 and to the downwardly extending ends is attached a discharge spout 30. An operating lever 31 is attached to the end of the shaft 27 and serves as a control means, whereby the spout 30 may be moved from its inoperative position (indicated in outline in Fig. 2) to its operative discharge position (indicated in solid lines in Fig. 2). A fixed feed hopper 32 is carried by the supporting frame 2, adjacent the inlet end 15, and serves as a means whereby the ingredients to be mixed in the container may be fed into the inlet opening to charge the container. This charge may be inserted either when the container is stationary or when it is being rotated.

Suitable motive means for rotating the container 12 is diagrammatically shown as an internal combustion engine 33, provided with a power shaft 34 carrying a pinion gear 35 in mesh with an idle gear 36, which is in driving mesh with the driving pinion 37 keyed to the shaft 38, carrying the pinion gears 39 and 40, which are in driving mesh with the respective external gears 21 and 22. Suitable clutch mechanism (not shown) is provided for disconnecting the motive means from driving engagement with the mixing container. It will therefore be seen that by means of the mechanism disclosed, the container 12 may be rotated; the mechanism provided for this purpose being such that the container 12 is adapted to be rotated at a sufficient velocity to cause the ingredients being mixed to be given sufficient centrifugal motion to produce high peripheral velocity mass flow. For example, in the mixing of concrete I have found that a peripheral velocity of the container of approximately 1500 feet per minute sufficient to give the desired velocity and flow to the mass when apparatus of the character shown herein is utilized. It will be obvious to those skilled in the art that the speed of rotation necessary to produce relatively high peripheral velocity mass flow for any other desired mix may be readily determined from experiment.

Operation.

As explained above, the ingredients may be fed into the machine either when the container is stationary or when it is being rotated. It may be assumed, for purposes of describing the operation, that the ingredients are fed into the container before the same is rotated. The ingredients to be mixed, such for example as cement and water, with or without other ingredients, are fed into the hopper 32 in proper proportions, and thence into the container 12. The rotation of the container 12 is now commenced, by means of the apparatus above described, rotating in an anti-clockwise direction, as shown in Fig. 1. When the rotation of the container is commenced, the blades 17 and 18 act as a means for inducing initial movement of the batch being mixed, and these blades continue to move the batch until the centrifugal force due to rotation has caused sufficient drive through friction between the materials and the inner surface of the container to insure continued rotation of the material in the container. These blades also serve to reestablish rotation of the batch in case it should stop by means of loss of momentum or of slip. When the batch has attained sufficient peripheral speed, it will be substantially accommodated in its peripheral flow in the space above defined as the peripheral apex of the container. As the materials, in their peripheral flow, are moved to the zenith of the container the inclined face 25 arrests a portion of the flowing mass, which collects as a "backwater" on the face 25 in the form of a wedge, the apex of which, on account of the "backrake" of the face 25, is tangential to the inner wall of the peripheral apex. Referring to Figs. 4 and 5, this action is clearly shown. The peripheral mass of moving material is designated as 41, and the entering wedge of material collected on the face 25 is designated as 42. This entering wedge 42 serves to divert the peripheral flow 41 which is then engaged by the deflecting

face 26, and deflected downwardly in a stream 43 which forcefully meets the peripheral mass at the nadir of the mixer as at 44. The material is not only compacted, due to its high velocity peripheral flow, but also, due to its impact against the entering wedge 42 and the deflecting action of the face 26, as well as by the forceful descent terminating at 44, from which latter point the mass is again commingled with and becomes a part of the peripheral flow 41. Since the wedge 42 does not extend entirely across the path of the peripheral flow, a portion of this flow will be deflected on each side of the wedge 42 to again assume its peripheral flow, but these divided portions again loose their identity and become mixed, due to the V-shaped container and the centrifugal momentum of the materials, and further due to the forceful descending flow at the nadir. It is to be understood, of course, that the deflecting wedge of material is made up of continually changing particles which are successively displaced and replaced from the batch flow.

It will therefore be seen that every particle in the mass will be thoroughly moved and mixed under the varying actions above described. There are thus provided a plurality of distinct paths or cycles over or through which the mass flows in very swift, smoothly flowing streams, during which the mass is turned, commingled and compacted, as and for the purposes above described. The interparticle attrition has been found to be so extensive as to actually increase the temperature of the mass approximately 10° F. in two minutes of mixing time, in the case of concrete.

The raising of the temperature of the mass is a highly desirable feature in the mixing of concrete, since it increases the reaction of the cement with the water, thus effecting a more rapid and complete transformation of the powdered cement into liquid form and increasing its concentration and usefulness. And the increased temperature during mixing may also be found advantageous in mixing other ingredients.

By utilizing the described process and the preferred form of mixing apparatus as shown and described herein, large batches of concrete may be rapidly and thoroughly mixed. A charge of ingredients can be thoroughly and uniformly commingled in about 20 seconds. And the same is true of the relative advantages in the rapidity and thoroughness of mixing other ingredients; although the time required may vary according to the ingredients being mixed.

While I have described my invention according to the preferred manner of carrying out the same, and have illustrated and described preferred forms of machines embodying the same, with specific reference by way of example, to the mixing of concrete, it will be obvious to those skilled in the art, after understanding my invention, that various alterations, modifications and substitutions may be made without departing from the spirit and scope of the invention, and I aim in the appended claims to cover all such modifications.

Having thus described my invention, what I claim as new and desire to secure by Letters Patent, is:

1. The method of mixing together a plurality of ingredients, which comprise subjecting the ingredients while confined within the peripheral wall of a container to such centrifugal force as to produce high velocity mass flow of the batch, causing the particles of the mass to be compacted during their centrifugal flow, intercepting and retarding a portion of said batch to form a wedge, and causing said wedge formed portion to divert the rapidly moving mass while still compacting it, and causing it to flow into position where it is again moved and compacted under the influence of the centrifugal force, and continuing the cycle until the batch is mixed, thereby effecting the mixing with compacting and interparticle attrition.

2. The method of mixing together a plurality of ingredients which comprise subjecting the ingredients while confined within the peripheral wall of a container to such centrifugal force as to produce high velocity mass flow of the batch, causing a decrease in velocity of a portion of said mass flow adjacent the periphery of said container in the path of said high velocity mass flow and utilizing said portion to divert the rapidly moving mass while compacting it, and causing it to flow into position where it is again compacted and moved under the influence of the centrifugal force, and continuing the cycle until the batch is mixed, thereby effecting the mixing with compacting and interparticle attrition.

3. The method of mixing cement and water in batches with or without other ingredients, which comprises subjecting the batch while confined within the peripheral wall of a container to such centrifugal force as to produce peripheral high velocity mass flow of the batch, intercepting and retarding a portion of said batch to form a wedge, and causing said wedge formed portion to divert the rapidly moving mass while compacting it, and causing it to flow in a direction substantially diametrical to said peripheral mass flow and again into the path of said peripheral flow where it is again compacted and brought under the influence of said centrifugal force, and continuing the cycle until the batch is mixed, thereby effecting the mixing with compacting and interparticle attrition.

4. In apparatus of the character described,

the combination of a centrifugal mixing container adapted to receive the material to be mixed and rotatable at such speed as to cause the mass of ingredients to be impelled by centrifugal force peripherally at high velocity mass flow while adhering to the inner periphery of the container, and an engaging means provided with a blunt face adapted to engage and form from the mass of ingredients a wedge of material which serves jointly as an entering wedge to divert the moving mass from the periphery of the container and as a buffer to protect the face of said engaging member from undue abrasive wear.

5. In apparatus of the character described, the combination of a centrifugal mixing container whose axis of rotation is substantially horizontal, adapted to receive the material to be mixed and rotatable at such speed as to cause the mass of ingredients to be impelled by centrifugal force peripherally at high velocity mass flow while adhering to the inner periphery of the container, and an engaging means provided with a blunt face adapted to engage and form from the mass of ingredients a wedge of material which serves jointly as an entering wedge to divert the moving mass from the periphery of the container and as a cushion to protect the face of said engaging member from undue wear, and which in combination with a downwardly extending portion of said engaging means serves to deflect a portion of said high velocity mass flow to the nadir.

6. In apparatus of the character described, the combination of a centrifugal mixing container adapted to receive the material to be mixed and rotatable at such speed as to cause the mass of ingredients to be impelled by centrifugal force peripherally at high velocity mass flow while adhering to the inner periphery of the container, and an engaging means provided with a blunt face having a slight back rake adapted to engage and form from the mass of ingredients a wedge of material which serves jointly as an entering wedge to divert the moving mass from the periphery of the container and as a cushion to protect the face of said engaging member from undue wear.

7. In apparatus of the character described, the combination of a centrifugal mixing container adapted to receive the material to be mixed and rotatable at such speed as to cause the mass of ingredients to be impelled by centrifugal force peripherally at high velocity mass flow while adhering to the inner periphery of the container, and combined engaging and deflecting means provided with a face adapted to engage and collect a portion of said mass of ingredients to momentarily hold such arrested portion in the form of a wedge whose apex is substantially tangent to the inner peripheral wall of said container, and said means having a deflecting portion curved rearwardly and inwardly from said face toward the axis of rotation of said container, whereby said wedge serves to divert the moving mass from the periphery of the container and said deflecting portion serves to conduct the diverted ingredients to a region of the peripheral mass flow removed from said point of tangency.

8. In apparatus of the character described, the combination of a centrifugal mixing container whose axis of rotation is substantially horizontal, adapted to receive the material to be mixed and rotatable at such speed as to cause the mass of ingredients to be impelled by centrifugal force peripherally at high velocity mass flow while adhering to the inner periphery of said container, and combined engaging and deflecting means provided with a face adjacent the zenith of the peripheral flow and adapted to engage and collect a portion of said mass of ingredients to momentarily hold such arrested portion in the form of a wedge whose apex is substantially tangent to the inner peripheral wall of said container, and said means having a deflecting portion curved rearwardly and inwardly from said face toward the nadir of said container, whereby said wedge serves to divert the moving mass from the periphery of the container and said deflecting portion serves to conduct the diverted ingredients to the nadir of said container.

9. In apparatus of the character described, the combination of a centrifugal mixing container whose axis of rotation is substantially horizontal, adapted to receive the material to be mixed and rotatable at such speed as to cause the mass of ingredients to be impelled by centrifugal force peripherally at high velocity mass flow while adhering to the inner periphery of said container, and combined engaging and deflecting means provided with a face adjacent the zenith of the peripheral flow and adapted to engage and collect a portion of said mass of ingredients to momentarily hold such arrested portion in the form of a wedge whose apex is substantially tangent to the inner peripheral wall of said container, and said means having a deflecting portion curved rearwardly and inwardly from said face toward the nadir of said container and increasing in width toward its inner end, whereby said wedge serves to divert the moving mass from the periphery of the container and said deflecting portion serves to conduct the diverted ingredients in a widening stream to the nadir of said container.

10. In apparatus of the character described, the combination of a container in the general form of an annulus with V-shaped section whose axis of rotation is substantially horizontal, and adapted to receive the in-

gredients to be mixed and rotatable at such speed as to subject the ingredients to the action of centrifugal force and cause them to be moved at high velocity peripheral mass flow, the peripheral apex of said container providing a peripheral path for the ingredients being mixed, means for inducing initial rotation of said mass arranged about the axis of rotation of said container and whose outer diameter of rotation substantially defines the inner diameter of said peripheral apex, and mass deflecting means within said peripheral apex area.

11. In apparatus of the character described, the combination of a container in the general form of an annulus with rounded V-shaped section whose axis of rotation is substantially horizontal and provided with a comparatively large inlet opening at one end and a comparatively large outlet opening at the other end, and adapted to receive the ingredients to be mixed and rotatable at such speed as to subject the ingredients to the action of centrifugal force and cause them to be moved at high velocity peripheral mass flow, the peripheral apex of said container providing a peripheral path for the ingredients being mixed, means for inducing initial rotation of said mass arranged about the axis of rotation of said container and whose outer diameter of rotation substantially defines the inner diameter of said peripheral apex, and mass deflecting means within said peripheral apex area.

12. In apparatus of the character described, the combination of a container in the general form of an annulus with V-shaped section whose axis of rotation is substantially horizontal and adapted to receive the ingredients to be mixed and rotatable at such speed as to subject the ingredients to the action of centrifugal force and cause them to be moved at high velocity peripheral mass flow, the peripheral apex of said container providing an uninterrupted peripheral path for the ingredients being mixed, means for inducing initial rotation of said mass arranged about the axis of rotation of said container and whose outer diameter of rotation substantially defines the inner diameter of said peripheral apex, and mass deflecting means within said peripheral apex area adapted to interrupt the otherwise continuous peripheral mass flow and deflect a substantial portion of the mass from one peripheral point in the apex area to another point in the apex area.

13. In apparatus of the character described, the combination of a container in the general form of an annulus with V-shaped section whose axis of rotation is substantially horizontal and adapted to receive the ingredients to be mixed and rotatable at such speed as to subject the ingredients to the action of centrifugal force and cause them to be moved at high velocity peripheral mass flow, the peripheral apex of said container providing a peripheral path for the ingredients being mixed, means rotatable with said container for inducing initial rotation of said mass arranged about the axis of rotation of said container and whose outer diameter of rotation substantially defines the inner diameter of said peripheral apex, and fixed mass deflecting means within said peripheral apex area.

14. In apparatus of the character described, the combination of a container with V-shaped section whose axis of rotation is substantially horizontal and provided with an inlet opening and an outlet opening and adapted to receive the ingredients to be mixed and rotatable at such speed as to subject the ingredients to the action of centrifugal force and cause them to be moved at high velocity peripheral mass flow, the peripheral apex of said container providing a peripheral path for the ingredients being mixed, means for inducing initial rotation of said mass arranged about the axis of rotation of said container but leaving said peripheral path unobstructed, and means for inducing forceful mass deflection of ingredients from said peripheral path.

15. In apparatus of the character described, the combination of a container with V-shaped section whose axis of rotation is substantially horizontal and provided with an inlet opening and an outlet opening and adapted to receive the ingredients to be mixed and rotatable at such speed as to subject the ingredients to the action of centrifugal force and cause them to be moved at high velocity peripheral mass flow, the peripheral apex of said container providing a peripheral path for the ingredients being mixed, means for inducing initial rotation of said mass arranged about the axis of rotation of said container but leaving said peripheral path unobstructed, means for inducing forceful mass deflection of ingredients from said peripheral path, and discharge means adapted to be positioned adjacent to said forceful mass deflecting means in the path of said deflected ingredients and serving when so placed to conduct said ingredients out through said outlet opening, to thereby rapidly discharge said ingredients.

In testimony whereof I have signed my name to this specification.

NATHAN C. JOHNSON.