PCT WORLD INTELLECTUAL PROPERTY ORGANIZATION
International Bureau

INTERNATIONAL APPLICATION PUBLISHED UNDER THE PATENT COOPERATION TREATY (PCT)

(51) International Patent Classification 6 : A61F 5/445

A1

(11) International Publication Number: **WO 95/11644**

(43) International Publication Date: 4 May 1995 (04.05.95)

(21) International Application Number: PCT/BE94/00075

(22) International Filing Date: 27 October 1994 (27.10.94)

(30) Priority Data:
9301150 27 October 1993 (27.10.93) BE

(71) Applicant *(for all designated States except US)*: PONNET, GILMAN EN ANTHONY [BE/BE]; Vogelkerslaan 20, B-2950 Kappelen (BE).

(72) Inventor; and
(75) Inventor/Applicant *(for US only)*: ANTHONY, Jean-Michel [BE/BE]; Marcottedreef 6, B-2950 Kappelen (BE).

(74) Agents: VOSSWINKEL, P. et al.; Gevers Patents, Holidaystraat 5, B-1831 Diegem (BE).

(81) Designated States: CA, JP, US, European patent (AT, BE, CH, DE, DK, ES, FR, GB, GR, IE, IT, LU, MC, NL, PT, SE).

Published
With international search report.
Before the expiration of the time limit for amending the claims and to be republished in the event of the receipt of amendments.
In English translation (filed in Dutch).

(54) Title: APPARATUS FOR APPLYING STOMA PLATES

(57) Abstract

The invention relates to an apparatus for heating stoma plates quicker and uniformly up and for adhering them perfectly onto the skin thanks to pressure, characterised in that it comprises a style (1) with an adjustable heating resistance (5) for keeping at least the head (2) of said style (1) at a pre-adjusted temperature.

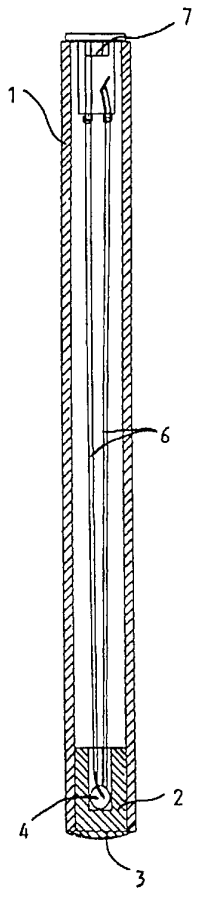

FOR THE PURPOSES OF INFORMATION ONLY

Codes used to identify States party to the PCT on the front pages of pamphlets publishing international applications under the PCT.

AT	Austria	**GB**	United Kingdom	**MR**	Mauritania
AU	Australia	**GE**	Georgia	**MW**	Malawi
BB	Barbados	**GN**	Guinea	**NE**	Niger
BE	Belgium	**GR**	Greece	**NL**	Netherlands
BF	Burkina Faso	**HU**	Hungary	**NO**	Norway
BG	Bulgaria	**IE**	Ireland	**NZ**	New Zealand
BJ	Benin	**IT**	Italy	**PL**	Poland
BR	Brazil	**JP**	Japan	**PT**	Portugal
BY	Belarus	**KE**	Kenya	**RO**	Romania
CA	Canada	**KG**	Kyrgystan	**RU**	Russian Federation
CF	Central African Republic	**KP**	Democratic People's Republic of Korea	**SD**	Sudan
CG	Congo			**SE**	Sweden
CH	Switzerland	**KR**	Republic of Korea	**SI**	Slovenia
CI	Côte d'Ivoire	**KZ**	Kazakhstan	**SK**	Slovakia
CM	Cameroon	**LI**	Liechtenstein	**SN**	Senegal
CN	China	**LK**	Sri Lanka	**TD**	Chad
CS	Czechoslovakia	**LU**	Luxembourg	**TG**	Togo
CZ	Czech Republic	**LV**	Latvia	**TJ**	Tajikistan
DE	Germany	**MC**	Monaco	**TT**	Trinidad and Tobago
DK	Denmark	**MD**	Republic of Moldova	**UA**	Ukraine
ES	Spain	**MG**	Madagascar	**US**	United States of America
FI	Finland	**ML**	Mali	**UZ**	Uzbekistan
FR	France	**MN**	Mongolia	**VN**	Viet Nam
GA	Gabon				

"Apparatus for applying stoma plates"

This invention relates to an apparatus for heating stoma plates quicker and uniformly up and for adhering them onto the skin thanks to pressure.

Stoma plates, destined to be adhered in case of colostomy, ileostomy or urostomy at the place of the operation onto the skin, are always provided on one side with an adhesive layer. Usually this adhesive layer is based on pectin showing better adhesive properties upon heating up. To such a stoma plate, which has a central opening, a small bag has to be fixed to collect the faeces or the urine.

Heating up was usually achieved by massaging the material of which the plate is made around the central opening with the finger.

Due to the rubbing action, heat is generated making the pectin layer sticky in so that the small stoma plate may adhere onto the skin after 10 to 20 minutes of this treatment. This time span is not only too long and too time-consuming but the heating action was regularly found to be insufficient.

Attempts are already taken to design an apparatus which was equipped with non-rechargeable batteries. This small apparatus showed several drawbacks, the most important of which was the too low available temperature. Also the necessity to replace the batteries in time, appeared to be a substantial nuisance and made the use of the apparatus too little flexible.

In this respect it is important that heat can be generated and that pressure can be exerted onto that part.

An object of the invention is now to provide an apparatus allowing to heat and adhere the part of the stoma plate which is to be heated quickly and with the highest precision.

To solve the problems set forth hereinabove and other problems associated therewith, the apparatus according to the invention comprises a style and an adjustable heating resistance for keeping at least the head of said style at a pre-adjusted temperature.

In a very advantageous embodiment said heating resistance is a self-regulating heating resistance.

In a particular embodiment said heating resistance is of the P.T.C.-type, respectively the N.T.C.-type.

Other details and advantages of the invention will become apparent from the following description of an apparatus according to the invention. This description is only given by way of example and does not limit the invention. The reference numerals relate to the figures annexed hereto.

Figure 1 is a longitudinal section through the apparatus according to the invention.

Figure 2 illustrates how to use the apparatus according to the invention.

The apparatus shown by these figures is composed of a style 1, provided with a heatable head 2 with a rubbing surface 3. This rubbing surface has from an ergonomic point of view an arcuate profile. The heatable head 2 consists of a conductive mass having a central cavity 4 wherein a heating resistance 5 is built in. This heating resistance 5 is connected by electrical conductors 6 to a low voltage power point 7.

Characterising for the invention is the use of a self-regulating resistance of the P.C.T.-type (Positive Temperature Control) or of the N.T.C.-type (Negative Temperature Control) as heating resistance. Use can also be made of a resistance supplied via a thermostat.

By using a heating resistance of the P.T.C.-, respectively the N.T.C.-type the entire apparatus may have very small dimensions and can therefore be constructed very compactly. As a result thereof, the patient has a good control of the apparatus whilst the heated rubbing surface of the style head shows optimal dimensions.

In the three cases the style head is therefore always brought at its ideal temperature and kept at this ideal temperature.

The arcuate rubbing surface 3 of the head 2 of the style 1 is preferably provided with a layer of polytetrafluoroethylene (teflon) increasing the rubbing capacity of the style considerably.

Thanks to this "Teflon"-layer, it is also possible to massage the stoma plate through a bag of polyethylene or of a technically equivalent material.

For a patient (shown in figure 2) it is now possible to bring in a very short time a stoma plate 8, usually the circular central part 8' thereof, at the desired temperature. The heat sensitive pectin layer, which is applied on one side of the stoma plate 8, can be heated up now by the patient without problems and brought to the desired temperature without having to pass on to this end to a regular and sustained rubbing of the central part of the stoma plate.

The temperature generated by the heating resistances of said type is therefore always of the desired level and burns are consequently entirely excluded.

A lot of patients have to cope with skin irritations and wounds in the area around the stoma. By using cicatrising and wound healing powders these patients encounter particular difficulties for adhering their stoma plates in this area.

It has been found that the apparatus according to the invention increases the adhesive properties of said plates considerably, also in these difficult circumstances wherein both the use of powders and the presence of liquid seriously hamper adhering the stoma plates.

The style 1 may be hollow but the electrical conductors 6 could also be embedded in a ceramic or insulating filling mass.

It is also possible to use a separate holder wherein the style can be applied. The holder would be kept then at an adjustable temperature level which is kept at a constant value.

CLAIMS

1. An apparatus for heating stoma plates quicker and uniformly up and for adhering them perfectly onto the skin thanks to pressure, characterised in that it comprises a style (1) with an adjustable heating resistance (5) for keeping at least the head (2) of said style (1) at a pre-adjusted temperature.

2. An apparatus according to claim 1, characterised in that said heating resistance (5) is a self-regulating heating resistance.

3. An apparatus according to claim 2, characterised in that said heating resistance (5) is of the P.T.C.-type.

4. An apparatus according to claim 2, characterised in that said heating resistance (5) is of the N.T.C.-type.

5. An apparatus according to claim 1, characterised in that said heating resistance (5) is controlled by a thermostat connected thereto.

6. An apparatus for heating stoma plates quicker and uniformly up and for adhering them perfectly onto the skin thanks to pressure, characterised in that it comprises a style (1), at least the head (2) of which can be plunged in a holder provided with a self-regulating heating resistance of the P.T.C.-, respectively the N.T.C.-type.

7. An apparatus for heating stoma plates quicker and uniformly up and for adhering them perfectly onto the skin thanks to pressure, characterised in that it comprises a style (1), at least the head (2) of which can be plunged in a holder provided with a thermostat.

8. An apparatus according to any one of the claims 1 to 7, characterised in that the head of said style (1), i.e. the extremity said stoma plates (2) are being heated up with, show an arcuate rubbing surface (3).

9. An apparatus according to claim 8, characterised in that said rubbing surface (3) is coated with polytetrafluoroethylene or a substance showing similar rubbing capacities.

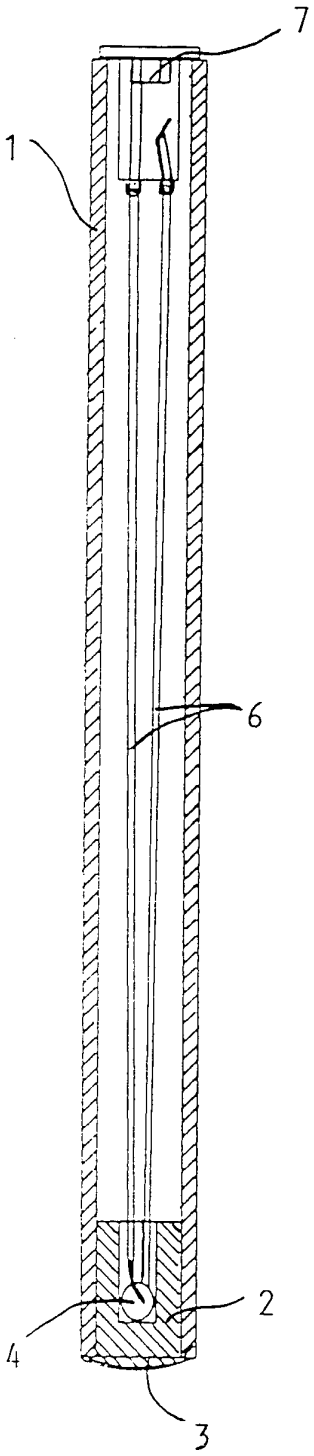

Fig. 1.

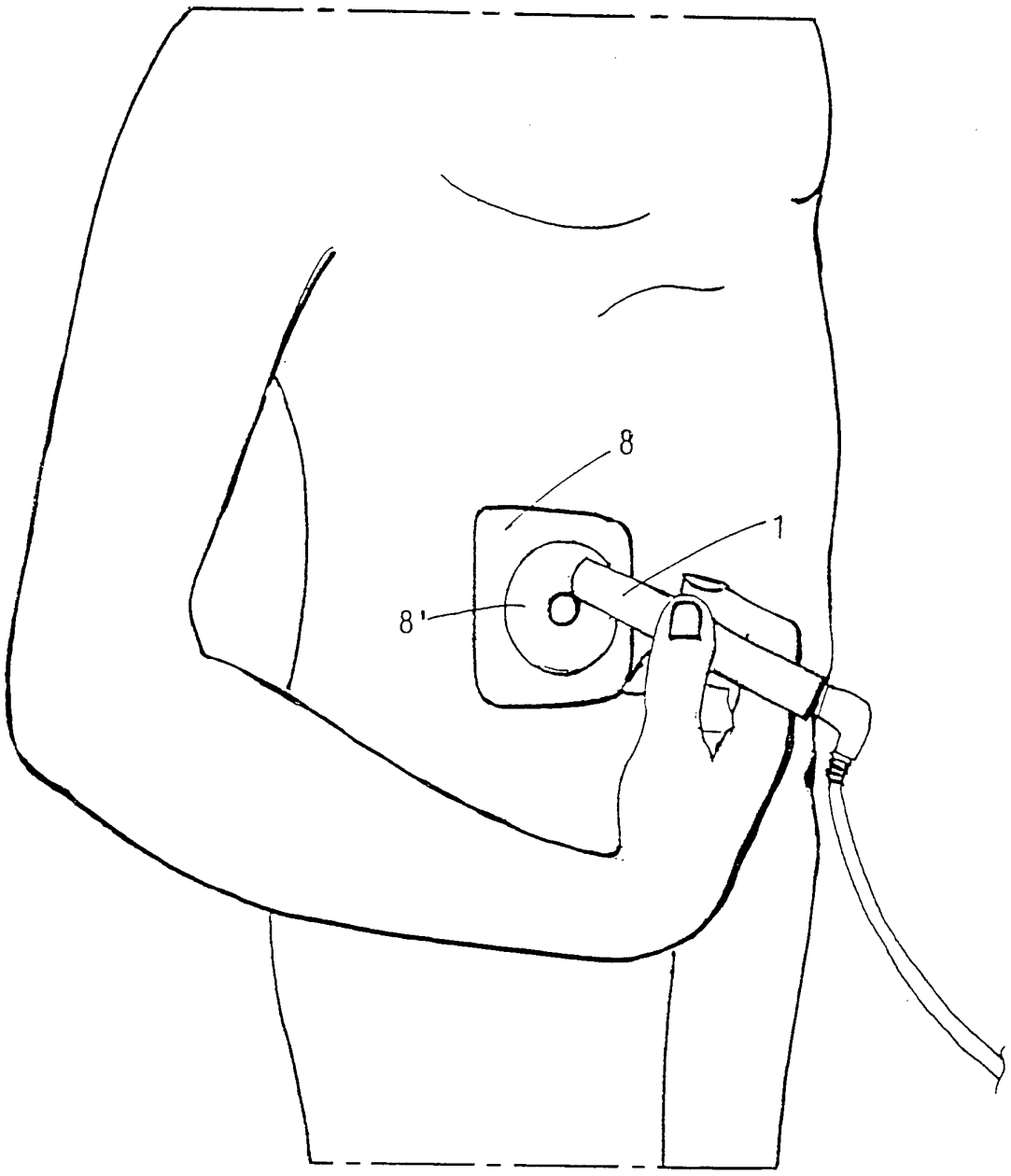

Fig. 2.

INTERNATIONAL SEARCH REPORT

Interr ıal Application No
PCT/BE 94/00075

A. CLASSIFICATION OF SUBJECT MATTER
IPC 6 A61F5/445

According to International Patent Classification (IPC) or to both national classification and IPC

B. FIELDS SEARCHED

Minimum documentation searched (classification system followed by classification symbols)
IPC 6 A61F A61B

Documentation searched other than minimum documentation to the extent that such documents are included in the fields searched

Electronic data base consulted during the international search (name of data base and, where practical, search terms used)

C. DOCUMENTS CONSIDERED TO BE RELEVANT

Category °	Citation of document, with indication, where appropriate, of the relevant passages	Relevant to claim No.
A	GB,A,2 133 990 (MATSUSHITA) 8 August 1984 see page 4, line 86 - line 98; claim 8; figure 10 ---	1,6,7
A	US,A,4 686 355 (LAY) 11 August 1987 see column 3, line 13 - line 21; figure 1 ---	1,6,7
A	CH,A,402 204 (TATEISI DENKI KABUSHIKIKAISHA) see page 3, line 9 - line 28; figures 1,2 ---	1,6,7
A	US,A,4 726 354 (FUJITA) 23 February 1988 see abstract; figure 1 -----	1,6,7

☐ Further documents are listed in the continuation of box C.

☒ Patent family members are listed in annex.

° Special categories of cited documents :

"A" document defining the general state of the art which is not considered to be of particular relevance

"E" earlier document but published on or after the international filing date

"L" document which may throw doubts on priority claim(s) or which is cited to establish the publication date of another citation or other special reason (as specified)

"O" document referring to an oral disclosure, use, exhibition or other means

"P" document published prior to the international filing date but later than the priority date claimed

"T" later document published after the international filing date or priority date and not in conflict with the application but cited to understand the principle or theory underlying the invention

"X" document of particular relevance; the claimed invention cannot be considered novel or cannot be considered to involve an inventive step when the document is taken alone

"Y" document of particular relevance; the claimed invention cannot be considered to involve an inventive step when the document is combined with one or more other such documents, such combination being obvious to a person skilled in the art.

"&" document member of the same patent family

Date of the actual completion of the international search	Date of mailing of the international search report
23 February 1995	15. 03. 95

Name and mailing address of the ISA	Authorized officer
European Patent Office, P.B. 5818 Patentlaan 2 NL - 2280 HV Rijswijk Tel. (+ 31-70) 340-2040, Tx. 31 651 epo nl, Fax: (+ 31-70) 340-3016	Moers, R

Form PCT/ISA/210 (second sheet) (July 1992)

INTERNATIONAL SEARCH REPORT

Interr ial Application No
PCT/BE 94/00075

Patent document cited in search report	Publication date	Patent family member(s)	Publication date
GB-A-2133990	08-08-84	JP-C- 1348423	13-11-86
		JP-A- 59139261	10-08-84
		JP-B- 61016181	28-04-86
		DE-A,C 3400587	09-08-84
		US-A- 4604993	12-08-86
US-A-4686355	11-08-87	NONE	
CH-A-402204		BE-A- 626044	
		FR-A- 1341121	22-01-64
		NL-C- 136832	
		NL-A- 285407	
US-A-4726354	23-02-88	NONE	