No. 651,170. Patented June 5, 1900.

E. W. THOMAS.

DISPLAY RACK.

(No Model.) (Application filed Aug. 25, 1899.)

Fig. 3.

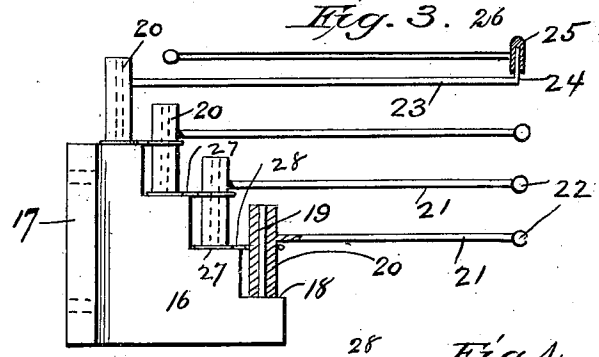

Fig. 4.

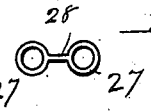

Fig. 1

Fig. 2

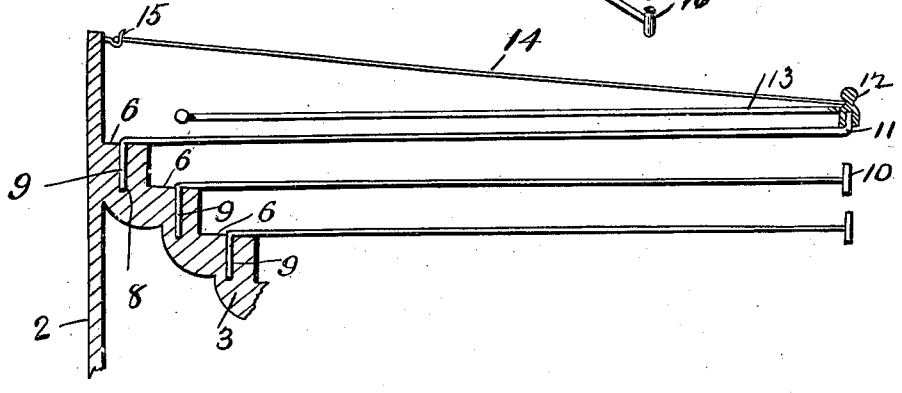

Witnesses
F. L. Ourand.
E. L. Baown

Inventor.
Edward W. Thomas
By
W. T. Fitzgerald & Co.,
Attorneys

THE NORRIS PETERS CO., PHOTO-LITHO., WASHINGTON, D. C.

UNITED STATES PATENT OFFICE.

EDWARD W. THOMAS, OF BERLIN, WISCONSIN.

DISPLAY-RACK.

SPECIFICATION forming part of Letters Patent No. 651,170, dated June 5, 1900.

Application filed August 25, 1899. Serial No. 728,474. (No model.)

To all whom it may concern:

Be it known that I, EDWARD W. THOMAS, a citizen of the United States, residing at Berlin, in the county of Green Lake and State of Wisconsin, have invented certain new and useful Improvements in Display-Racks; and I do hereby declare the following to be a full, clear, and exact description of the invention, such as will enable others skilled in the art to which it appertains to make and use the same.

My invention has relation to advertising or display racks, and relates more particularly to that variety thereof which will be found especially useful and desirable for displaying various kinds of textiles, as curtains, &c.; and it consists of certain novel features of combination and construction of parts, which will be hereinafter fully described and claimed.

One object of my invention, among others, is to provide a cheap, though reliably-efficient, rack of the character specified which may be readily constructed and quickly mounted in its operative position and as quickly removed and replaced at another point should it become desirable to change the location thereof.

A further object is to so construct the several parts that they may be readily separated from each other for the purpose of shipment or other reason.

The advantages and manner of using my invention will be made fully apparent in the following specification and illustrated in the accompanying drawings, in which—

Figure 1 is a perspective view of my invention complete ready to be secured in position at any point, as upon a wall, post, or other suitable support. Fig. 2 is a detail view of a portion of the rack illustrated in Fig. 1, showing parts thereof in section. Fig. 3 illustrates another form of construction which may be adopted in producing my improved supporting and adjustable rack. Fig. 4 is a detail view showing the adjustable supporting-link employed to reinforce and sustain the several arms in their respective operative positions.

For convenience of reference the various details of my invention and the coöperating accessories thereof will be designated by numerals, 1 indicating the base-section of my improved bracket, while 2 and 3 indicate, respectively, the anchoring-section and stepped portion of the bracket, it being understood that all of said parts may be integrally constructed or separately formed and assembled, as deemed most desirable. The member 2 is designed to lie against the wall or other suitable support and is provided with a plurality of slotted apertures having a reduced upper portion 4, which merges into the aperture 5, the object of said aperture being to receive the head of a nail, screw, or the like which has been previously entered into the wall or other support, when by permitting the bracket to drop downward said screw or nail will be engaged by the upper portion 4, and the bracket thus reliably secured and held in an adjusted position. The member 3, it will be observed, is provided with a plurality of stepped portions 6, the object of which is to provide a seat in which one or more of the supporting-arms 7 may be secured, it being understood that one or more vertically-disposed apertures 8 are formed in the upper face of each of said stepped portions, designed to receive the right-angled extension 9 of one of the arms 7.

In order to insure that the curtain or other fabric suspended upon one of the arms may be held in its adjusted position thereon, I provide upon the end of each of said arms the cross-head 10, as clearly shown. The upper arm will by reason of the position of the seat in which it is mounted be of greatest length, and it may be desirable to reinforce the right-angled extension 9 thereof, and in order to conveniently do so and to further extend the reach of said arm I provide upon the outer end of the upper arm the right-angled upwardly-directed threaded finger or stem 11, designed to be received by a threaded socket provided in the head 12, which latter is permanently attached to the auxiliary arm 13 and is also connected at its upper end with the bracing-rod 14, the opposite end of which is secured to a staple or hook 15, attached to the upper end of the member 2, or said staple or hook may be directly secured to the wall or other suitable support to which the bracket is attached.

I desire to call especial attention to the office or function of the auxiliary arm 13, inasmuch as I rely upon said element to provide means for adjustably securing in the desired posi-

tion a background against which the lace curtains or other fabric may be disposed in such a way as to more effectively bring out or accentuate the particular character of the weave or shape of the figures involved in the meshes of the curtain or other fabric.

By the arrangement of the series of supporting-arms 7, upon which the curtains may be suspended, and the relation held thereto by the auxiliary arm 13 it is obvious that said auxiliary arm may be readily so disposed that the background, preferably formed of some dark material, may be instantly adjusted so that the merits of the fabric may be clearly brought out without the necessity of disposing all of the arms against or parallel with the wall.

In case the fabric representing the background and sustained by the auxiliary arm 13 should be of a heavy character it will be seen that the same will be reliably supported, as by the bracing-section 14, and, furthermore, that the position of said background may be quickly changed, so as to occupy a position parallel with the wall or at any desired angle.

The object in providing a bracket having a series of steps upon the surface of each of which may be mounted one of the supporting-arms is to enable a large variety of curtains or other goods to be simultaneously displayed, inasmuch as a variety of said goods may be so disposed that they will be comparatively close to the wall or other support upon which the bracket is mounted, at the same time insuring that a portion of each of the curtains or other fabric will be visible—that is to say, a curtain, for instance, may be thrown over the upper arm and the same swung against the wall or other support, when the next lower arm may be provided with a curtain of a different pattern and the following arms treated in the same way, each arm being thrown around parallel with the wall, and when all of said arms are thus loaded and swung to one side all of said arms will lie substantially parallel with each other and parallel with the wall, and since each arm is higher than the preceding arm it will be insured that a portion of each of the upper curtains or other fabric will be visible, while the lower curtain will be wholly in view. It is therefore obvious that by providing a bracket with a series of stepped or graduated faces 6 the arms mounted thereon will insure that a portion of the fabric carried thereby will be visible, even when all of said arms are swung against the wall or parallel therewith.

By the arrangement I have just described it will be obvious that the bracket with its series of arms 7 and auxiliary arm 13 will provide means for displaying a large number of curtains and other articles, so that a portion of all or each may be readily brought to view, inasmuch as said arms can be swung from side to side at the will of the operator.

In Fig. 3 I have illustrated a modified construction, which may be adopted in producing my improved display-rack, wherein it will be seen that a stepped bracket 16 is provided, having the anchoring portion 17 of any preferred construction or made in accordance with the member 2, by means of which it can be readily secured in any desired position. Each of the upper faces 18 of the stepped bracket 16 is provided with a fixed post or stem 19, designed to be loosely received by a vertically-disposed aperture provided in the body portion 20, to which an arm 21 may be permanently secured, or a plurality of said arms may be attached thereto, if preferred. Upon each of the arms 21 I provide a spherical or other form of body 22, designed to prevent the curtain or other object from casually slipping off. The upper arm 23 may be provided with an upwardly-directed finger or stem 24, designed to be received by a socket provided in the head 25 of the auxiliary arm 26. It will be observed that since the arms 21 and 23 are permanently attached to the body portion 20 and since said body portion loosely fits over one of the stems, the arms may be readily withdrawn and replaced at will. To provide means for reinforcing the stems 19, I provide the device illustrated in Fig. 4, wherein it will be seen that two rings 27 are connected together by a rod 28, and since the internal diameter of said rings is sufficient to enable the body portion 19 to be snugly received thereby, the brace may be readily mounted in its operative position by placing it so that one of said rings will encircle the body of the lower arm preferably at a point near where said arm is joined to the body, while the other ring will be so disposed that it will encircle the base portion of the body attached to the arm next above the lower arm, it being understood that the other arms may be supported in a similar way, thereby taking the strain off of the upper portion of each of the stems 19.

While I have described the preferred construction to be adopted in my improved display-rack, it will be understood that the substantial equivalent thereof is comprehended by me in this application.

It will be seen from the foregoing specification that I have provided a display-rack which may be very cheaply manufactured and which will be found very desirable in displaying various kinds of merchandise, inasmuch as each of the arms may be so designed that they will accommodate one or more curtains or the like, and since said arm may be freely swung to either side access to any of the curtains is rendered possible.

The parts may be so manufactured that they will be interchangeable, and should any of the members become injured or broken they may be readily replaced without loss of the other parts.

Having thus fully described my invention, what I claim as new, and desire to secure by Letters Patent, is—

1. In a display-rack of the character specified, the combination with a suitable supporting-bracket having a stepped outer part, of a series of arms pivotally mounted in coöperation with said bracket and means to reinforce said arms in the manner specified and for the purpose set forth.

2. The herein-described display-rack comprising a stepped bracket portion; means for attaching the same to a support, in combination with a series of arms and means to connect said arms to said bracket, whereby they may swing laterally in either direction, as specified and for the purpose set forth.

3. In a display-rack, a bracket having a stepped portion; a series of stems secured to each horizontal face of said stepped portion, in combination with an arm having a body portion designed to fit over said stems, and a brace having rings at each end, each ring being designed to receive the body portion of one of said arms whereby said arms and stems will be braced in their operative position, in the manner specified and for the purpose set forth.

4. The herein-described display-rack for curtains or the like, the combination with a bracket having a series of graduated faces or seats, each resting in a different plane, each seat being provided with a vertically-disposed stem, in combination with a series of arms having a body portion designed to fit over one of said stems and suitable means to brace said parts and hold them in their operative position in the manner specified and for the purpose set forth.

5. In a display-rack, a bracket comprising a base, a back and an inclined graduated stepped portion, said back having a plurality of slots, in combination with a series of supporting-arms and means to attach said arms to said stepped portion whereby they may be moved laterally in either direction, and additional means to reinforce said arms, as specified and for the purpose set forth.

6. In a display-rack, the combination with a bracket having a series of graduated faces, each face lying in a different plane; a series of arms operatively connected to said bracket and a cross-head carried by the free ends of each of said arms; a brace connected to said bracket at one end and provided with a threaded socket at the other end adapted to receive the end of one of said arms, as specified and for the purpose set forth.

In testimony whereof I affix my signature in presence of two witnesses.

EDWARD W. THOMAS.

Witnesses:

JOHN J. WOOD, Jr.,

GEO. B. HENNEY.