(12) INTERNATIONAL APPLICATION PUBLISHED UNDER THE PATENT COOPERATION TREATY (PCT)

(19) World Intellectual Property Organization
International Bureau

(43) International Publication Date
5 October 2017 (05.10.2017)

WIPO | PCT

(10) International Publication Number
WO 2017/167308 A1

(51) International Patent Classification:
H04L 1/18 (2006.01)

(21) International Application Number:
PCT/CN2017/079199

(22) International Filing Date:
1 April 2017 (01.04.2017)

(25) Filing Language: English

(26) Publication Language: English

(30) Priority Data:

62/317,462	1 April 2016 (01.04.2016)	US
62/322,313	14 April 2016 (14.04.2016)	US
15/474,125	30 March 2017 (30.03.2017)	US

(71) Applicant: **MEDIATEK INC.** [CN/CN]; No. 1, Dusing Rd. 1st, Science-Based Industrial Park, Hsin-Chu, Taiwan 300 (CN).

(72) Inventors: **YANG, Weidong**; 4110 Via Candidiz Unit 101, San Diego, California 92130 (US). **LI, Chien-Chang**; No. 8-24, Dongwei, Magong City, Penghu County, Taiwan 880 (CN). **CHEN, Bo-Si**; No. 14, Ln. 100, Zhengyi Rd., Zhongzheng Dist., Keelung City, Taiwan 202 (CN). **CHEN, Yih-Shen**; 7F., No. 108, Chenggong 8th Rd., Zhubei City, Hsinchu County, Taiwan 302 (CN).

(74) Agent: **BEIJING SANYOU INTELLECTUAL PROPERTY AGENCY LTD.**; 16th Fl., Block A, Corporate Square, No. 35 Jinrong Street, Beijing 100033 (CN).

(81) Designated States *(unless otherwise indicated, for every kind of national protection available)*: AE, AG, AL, AM, AO, AT, AU, AZ, BA, BB, BG, BH, BN, BR, BW, BY, BZ, CA, CH, CL, CN, CO, CR, CU, CZ, DE, DJ, DK, DM, DO, DZ, EC, EE, EG, ES, FI, GB, GD, GE, GH, GM, GT, HN, HR, HU, ID, IL, IN, IR, IS, JP, KE, KG, KH, KN, KP, KR, KW, KZ, LA, LC, LK, LR, LS, LU, LY, MA, MD, ME, MG, MK, MN, MW, MX, MY, MZ, NA, NG, NI, NO, NZ, OM, PA, PE, PG, PH, PL, PT, QA, RO, RS, RU, RW, SA, SC, SD, SE, SG, SK, SL, SM, ST, SV, SY, TH, TJ, TM, TN, TR, TT, TZ, UA, UG, US, UZ, VC, VN, ZA, ZM, ZW.

[Continued on next page]

(54) Title: CONTROL CHANNEL DESIGN FOR ELAA

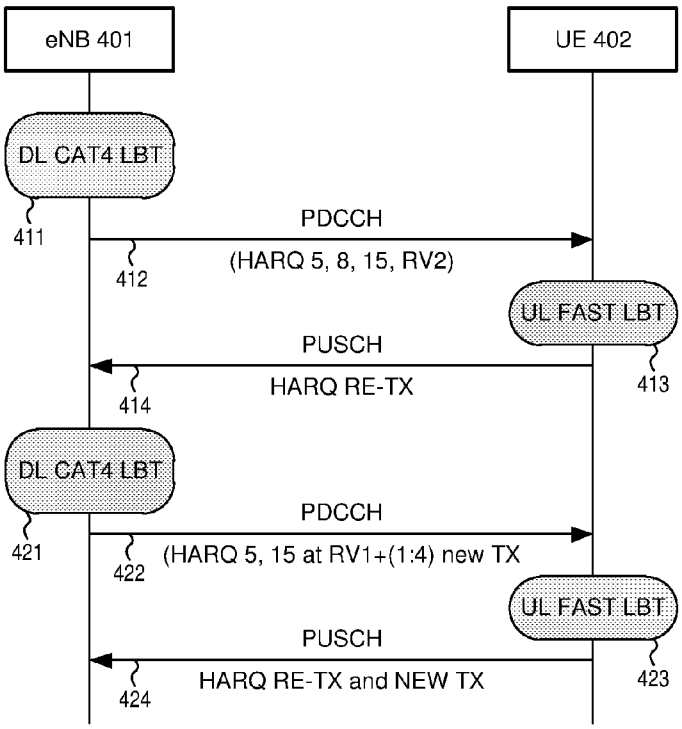

FIG. 4

(57) Abstract: A flexible and efficient physical downlink control channel (PDCCH) signaling scheme that schedules physical uplink shared channel (PUSCH) transmission over multiple subframes with Hybrid Automatic Retransmission (HARQ) support is proposed. The PDCCH has a downlink control information (DCI) format that schedules PUSCH transmission over multiple subframes. The PUSCH transmission is associated with multiple HARQ processes with non-consecutive HARQ process IDs. Furthermore, the DCI format uses joint signaling to combine HARQ process indexes, new data indication (NDI), and redundancy version (RV) to reduce signaling overhead.

WO 2017/167308 A1

(84) **Designated States** *(unless otherwise indicated, for every kind of regional protection available)*: ARIPO (BW, GH, GM, KE, LR, LS, MW, MZ, NA, RW, SD, SL, ST, SZ, TZ, UG, ZM, ZW), Eurasian (AM, AZ, BY, KG, KZ, RU, TJ, TM), European (AL, AT, BE, BG, CH, CY, CZ, DE, DK, EE, ES, FI, FR, GB, GR, HR, HU, IE, IS, IT, LT, LU, LV, MC, MK, MT, NL, NO, PL, PT, RO, RS, SE, SI, SK, SM, TR), OAPI (BF, BJ, CF, CG, CI, CM, GA, GN, GQ, GW, KM, ML, MR, NE, SN, TD, TG).

Published:

— *with international search report (Art. 21(3))*

CONTROL CHANNEL DESIGN FOR ELAA

CROSS REFERENCE TO RELATED APPLICATIONS

[0001] This application claims priority under 35 U.S.C. §119 from U.S. Provisional Application Number 62/317,462, entitled "Control Channel Design for eLAA," filed on April 1, 2016; U.S. Provisional Application Number 62/322,313, entitled "Control Channel Design for eLAA," filed on April 14, 2016, the subject matter of which is incorporated herein by reference.

TECHNICAL FIELD

[0002] The disclosed embodiments relate generally to wireless network communications, and, more particularly, to control channel design in licensed assisted access (LAA) wireless communications systems.

BACKGROUND

[0003] Third generation partnership project (3GPP) and Long Term Evolution (LTE) mobile telecommunication systems provide high data rate, lower latency and improved system performances. With the rapid development of "Internet of Things" (IOT) and other new user equipment (UE), the demand for supporting machine communications increases exponentially. To meet the demand of this exponential increase in communications, additional spectrum (i.e. radio frequency spectrum) is needed. The amount of licensed spectrum is limited. Therefore, communications providers need to look to unlicensed spectrum to meet the exponential increase in communication demand. One suggested solution is to use a combination of licensed spectrum and unlicensed spectrum. This solution is referred to as "Licensed Assisted Access" or "LAA". In such a solution, an established communication protocol such as Long Term Evolution (LTE) can be used over the licensed spectrum to provide a fist communication link, and LTE can also be used over the unlicensed spectrum to

provide a second communication link.

[0004] Furthermore, while LAA only utilizes the unlicensed spectrum to boost downlink through a process of carrier aggregation, enhanced LAA (eLAA) allows uplink streams to take advantage of the 5GHz unlicensed band as well. Although eLAA is straightforward in theory, practical usage of eLAA while complying with various government regulations regarding the usage of unlicensed spectrum is not so straightforward. Moreover, maintaining reliable communication over a secondary unlicensed link requires improved techniques.

[0005] In 3GPP Long-Term Evolution (LTE) networks, an evolved universal terrestrial radio access network (E-UTRAN) includes a plurality of base stations, e.g., evolved Node-Bs (eNBs) communicating with a plurality of mobile stations referred as user equipment (UEs). Orthogonal Frequency Division Multiple Access (OFDMA) has been selected for LTE downlink (DL) radio access scheme due to its robustness to multipath fading, higher spectral efficiency, and bandwidth scalability. Multiple access in the downlink is achieved by assigning different sub-bands (i.e., groups of subcarriers, denoted as resource blocks (RBs)) of the system bandwidth to individual users based on their existing channel condition. In LTE networks, Physical Downlink Control Channel (PDCCH) is used for downlink scheduling. Physical Downlink Shared Channel (PDSCH) is used for downlink data. Similarly, Physical Uplink Control Channel (PUCCH) is used for carrying uplink control information. Physical Uplink Shared Channel (PUSCH) is used for uplink data.

[0006] In Rel-14 LAA, uplink grants for a UE in a subframe can enable PUSCH transmission for the UE in multiple subframes for both cross-CC scheduling case and self-scheduling case. For UL transmission in eLAA, flexible timing between the subframe carrying the UL grant and subframes of the corresponding PUSCHs is supported. For the details of UL grant(s) for a UE in a subframe enabling PUSCH transmission for the UE in multiple subframes in LAA, at least the following options are considered. Option 1) Single UL grant in a subframe for a UE can schedule N ($N \geq 1$) PUSCH transmissions for the UE in N subframes with single PUSCH per subframe. Option 2) Single UL grant in a subframe for a UE can schedule single PUSCH transmission in a single subframe while UE can receive multiple UL grants in a subframe for PUSCH transmissions in different subframes. Option 3) Single UL grant in a subframe for a UE can enable the UE to transmit single PUSCH

transmission among one of the multiple subframes depending on UL LBT result.

[0007] The support of Hybrid Automatic Retransmission (HARQ) is an important feature in eLAA. HARQ allows a link to be operated with a tradeoff between throughput and latency as determined by the serving base station. A flexible and efficient PDCCH signaling scheme that schedules PUSCH transmission over multiple subframes with HARQ support is sought.

SUMMARY

[0008] A flexible and efficient physical downlink control channel (PDCCH) signaling scheme that schedules physical uplink shared channel (PUSCH) transmission over multiple subframes with Hybrid Automatic Retransmission (HARQ) support is proposed. The PDCCH has a downlink control information (DCI) format that schedules PUSCH transmission over multiple subframes. The PUSCH transmission is associated with multiple HARQ processes with non-consecutive HARQ process IDs. Furthermore, the DCI format uses joint signaling to combine HARQ process indexes, new data indication (NDI), and redundancy version (RV) to reduce signaling overhead.

[0009] In one embodiment, a base station transmits an uplink grant over a physical downlink control channel (PDCCH) to a user equipment (UE) in an orthogonal frequency division multiplexing (OFDM) wireless communications network. The base station receives an uplink transmission in response to the uplink grant. The uplink transmission is applied with multiple Hybrid Automatic retransmission (HARQ) processes. The multiple HARQ processes have non-consecutive HARQ process IDs. The base station transmits a downlink control information (DCI). The DCI comprises subsequent uplink grant information for HARQ data retransmission as well as HARQ new data transmission over multiple subframes.

[0010] In another embodiment, a user equipment (UE) receives an uplink grant from a base station over a physical downlink control channel (PDCCH) in an orthogonal frequency division multiplexing (OFDM) wireless communications network. The UE transmits uplink data over a physical uplink shared channel (PUSCH) in response to the uplink grant. The PUSCH transmission is applied with multiple Hybrid Automatic retransmission (HARQ) processes. The multiple HARQ processes have

non-consecutive HARQ process IDs. The UE decodes a downlink control information (DCI) from the base station. The DCI comprises subsequent uplink grant information for HARQ data retransmission as well as HARQ new data transmission over multiple subframes.

[0011] Other embodiments and advantages are described in the detailed description below. This summary does not purport to define the invention. The invention is defined by the claims.

BRIEF DESCRIPTION OF DRAWINGS

[0012] Figure 1 illustrates a wireless communications system with physical control channel design in extended licensed assisted access (eLAA) in accordance with a novel aspect.

[0013] Figure 2 is a simplified block diagram of a wireless transmitting device and a receiving device in accordance with a novel aspect.

[0014] Figure 3 illustrates one embodiment of PDCCH scheduling for uplink PUSCH transmission over multiple subframes.

[0015] Figure 4 illustrates a sequence flow between a base station and a user equipment for PUSCH resource allocation with HARQ in eLAA.

[0016] Figure 5 illustrates one embodiment of DCI design with joint signaling.

[0017] Figure 6 illustrates another embodiment of DCI design with joint signaling.

[0018] Figure 7 is flow chart of a method of DCI design for PUSCH transmission with HARQ from base station perspective in eLAA in accordance with one novel aspect.

[0019] Figure 8 is a flow chart of a method of DCI design for PUSCH transmission with HARQ from UE perspective in eLAA in accordance with one novel aspect.

DETAILED DESCRIPTION

[0020] Reference will now be made in detail to some embodiments of the invention, examples of which are illustrated in the accompanying drawings.

[0021] Figure 1 illustrates a wireless communications system 100 with physical

downlink control channel (PDCCH) design in extended licensed assisted access (eLAA) in accordance with a novel aspect. Mobile communication network 100 is an OFDM/OFDMA system comprising a base station eNodeB 101 and a plurality of user equipments including UE 102 and UE 103. In 3GPP LTE systems based on OFDMA downlink, the radio resource is partitioned into subframes in time domain, each subframe is comprised of two slots. Each OFDMA symbol further consists of a number of OFDMA subcarriers in frequency domain depending on the system bandwidth. The basic unit of the resource grid is called Resource Element (RE), which spans an OFDMA subcarrier over one OFDMA symbol. REs are grouped into physical resource blocks (PRBs), where each PRB consists of 12 consecutive subcarriers in one slot. In one example, the nominal channel bandwidth is 20MHz, occupied with 100 PRBs of 18MHz plus guard bands.

[0022] When there is a downlink packet to be sent from eNodeB to UE, each UE gets a downlink assignment, e.g., a set of radio resources in a physical downlink shared channel (PDSCH). When a UE needs to send a packet to eNodeB in the uplink, the UE gets an uplink grant from the eNodeB that assigns a physical uplink shared channel (PUSCH) consisting of a set of uplink radio resources. The UE gets the downlink or uplink scheduling information from a physical downlink control channel (PDCCH) that is targeted specifically to that UE. In addition, broadcast control information is also sent in PDCCH to all UEs in a cell. The downlink or uplink scheduling information and the broadcast control information, carried by PDCCH, is referred to as downlink control information (DCI). The uplink control information (UCI) including HARQ ACK/NACK, CQI, MIMO feedback, scheduling requests is carried by a physical uplink control channel (PUCCH) or PUSCH if the UE has data or RRC signaling.

[0023] Licensed Assisted Access (LAA) has been proposed to meet the exponential increase in communication demand. In LAA, a combination of licensed spectrum and unlicensed spectrum is used. An established communication protocol such as Long Term Evolution (LTE) can be used over the licensed spectrum to provide a fist communication link, and LTE can also be used over the unlicensed spectrum to provide a second communication link. Furthermore, while LAA only utilizes the unlicensed spectrum to boost downlink through a process of carrier aggregation, enhanced LAA (eLAA) allows uplink streams to take advantage of the 5GHz unlicensed band as well.

[0024] For UL transmission in eLAA, one or more uplink grant for a UE in a subframe can enable PUSCH transmission for the UE in multiple subframes. Furthermore, flexible timing between the subframe carrying the UL grant and subframes of the corresponding PUSCH transmission is supported. The support of Hybrid Automatic retransmission (HARQ) is also an important feature in eLAA. HARQ allows a link to be operated with a tradeoff between throughput and latency as determined by the base station. In accordance with one novel aspect, a flexible and efficient PDCCH signaling scheme that schedules PUSCH transmission over multiple subframes with HARQ support is proposed. The PDCCH has a DCI format that schedules PUSCH transmission in multiple subframes. The PUSCH transmission is associated with multiple HARQ processes with non-consecutive HARQ indexes. Furthermore, the DCI format uses joint signaling to combine information including HARQ process indexes, new data indication (NDI), and redundancy version (RV) to reduce signaling overhead.

[0025] In the example of Figure 1, eNodeB 101 transmits PDCCH 112 to UE 102 and PUSCH 120 is allocated for UE 102 for uplink transmission. Similarly, eNodeB 101 transmits PDCCH 113 to UE 103 and PRACH 130 is allocated for UE 102 for uplink transmission. In one advantageous aspect, the PDCCH carries DCI to schedule PUSCH transmission over multiple subframes that is associated with multiple HARQ processes with non-consecutive HARQ indexes. Typically, the DCI carried by the PDCCH comprises a format flag, a frequency hopping flag, resource allocation, MCS, NDI, TX power control, cyclic shift for DMRS, CSI request, SRS request, resource allocation type, and CRC. For multiple subframe PUSCH transmission, additional information is needed including HARQ indexes and redundancy version, resource interlace allocation for PUSCH, and uplink subframe index, as depicted by 110. Furthermore, new data indication (NDI), HARQ index, and redundancy version can be jointly signaled to reduce overhead.

[0026] Figure 2 is a simplified block diagram of wireless devices 201 and 211 in accordance with a novel aspect. For wireless device 201 (e.g., a transmitting device), antennae 207 and 208 transmit and receive radio signal. RF transceiver module 206, coupled with the antennae, receives RF signals from the antennae, converts them to baseband signals and sends them to processor 203. RF transceiver 206 also converts received baseband signals from the processor, converts them to RF signals, and sends out to antennae 207 and 208. Processor 203 processes the received baseband signals

and invokes different functional modules and circuits to perform features in wireless device 201. Memory 202 stores program instructions and data 210 to control the operations of device 201.

[0027] Similarly, for wireless device 211 (e.g., a receiving device), antennae 217 and 218 transmit and receive RF signals. RF transceiver module 216, coupled with the antennae, receives RF signals from the antennae, converts them to baseband signals and sends them to processor 213. The RF transceiver 216 also converts received baseband signals from the processor, converts them to RF signals, and sends out to antennae 217 and 218. Processor 213 processes the received baseband signals and invokes different functional modules and circuits to perform features in wireless device 211. Memory 212 stores program instructions and data 220 to control the operations of the wireless device 211.

[0028] The wireless devices 201 and 211 also include several functional modules and circuits that can be implemented and configured to perform embodiments of the present invention. In the example of Figure 2, wireless device 201 is a transmitting device that includes an encoder 205, a scheduler 204, an OFDMA module 209, and a configuration circuit 221. Wireless device 211 is a receiving device that includes a decoder 215, a HARQ circuit 214, an LBT circuit 219, and a configuration circuit 231. Note that a wireless device may be both a transmitting device and a receiving device. The different functional modules and circuits can be implemented and configured by software, firmware, hardware, and any combination thereof. The function modules and circuits, when executed by the processors 203 and 213 (e.g., via executing program codes 210 and 220), allow transmitting device 201 and receiving device 211 to perform embodiments of the present invention.

[0029] In one example, the transmitting device (a base station) configures radio resource (PUSCH) for UEs via configuration circuit 221, schedules downlink and uplink transmission for UEs via scheduler 204, encodes data packets to be transmitted via encoder 205 and transmits OFDM radio signals via OFDM module 209. The receiving device (a user equipment) obtains allocated radio resources for PUSCH via configuration circuit 231, receives and decodes downlink data packets via decoder 215, and performs uplink transmission and retransmission with HARQ via HARQ circuit 214 after successfully gain the channel access via LBT circuit 219.

[0030] To facilitate efficient and fair spectrum sharing, a dynamic spectrum sharing mechanism called listen-before-talk (LBT) is supported based on regulation rules in

each country. However, the performance of LAA with LBT mechanism may not satisfy the purpose of efficient and fair spectrum sharing. A maximum channel occupancy time (MCOT) including DL transmission from one eNB and UL transmission to the same eNB is thus introduced. A transmission sequence is defined as a number of subframes including possible partial subframes for DL and/or UL within a MCOT. The transmission in the first subframe among the transmission sequence is conducted after a Category 4 LBT. The node performing the Category 4 LBT can be either an eNB or a UE. A sequence of transmission including DL and/or UL can follow the transmission on the first subframe. The transmission sequence within the MCOT can be initiated by either a DL transmission or an UL transmission. The duration of a transmission sequence is called transmission duration. After the first subframe in a transmission sequence, LBT for another transmission should be faster compared to the Category 4 LBT, e.g., fast DL LBT and/or fast UL LBT.

[0031] Figure 3 illustrates one embodiment of PDCCH scheduling for uplink PUSCH transmission over multiple subframes. In the example of Figure 3, a transmission sequence is initiated with a downlink transmission. After the first subframe in the transmission sequence, the LBT procedure for another transmission within the same transmission duration should be fast (e.g., Category 2 LBT) as compared to the downlink Category 4 LBT. In Figure 3, the transmission on the first subframe n of the transmission sequence is for DL after performing the downlink Category 4 LBT, the transmission on the second subframe n+1 of the transmission sequence is for DL without LBT, and a fast UL LBT such as a one shot CCA can be used in the switch from DL transmission to UL transmission. When a UE is granted uplink transmission in consecutive subframes and when all of them are within the maximum transmission duration, it is enough for the UE to perform fast LBT on the first UL subframe (Subframe n+m), and forgo LBTs on the rest of them. Furthermore, subframe n+1 is for DL PDCCH and contains uplink grant for the subsequent PUSCH transmission over multiple subframes, e.g., subframe n+m, n+m+1, and n+m+2. Each of the uplink subframes is associated with an HARQ process with an HARQ indexes that are not necessarily consecutive.

[0032] Figure 4 illustrates a sequence flow between a base station 401 and a user equipment UE 402 for PUSCH transmission with HARQ in eLAA. In step 411, eNB 401 performs a DL category 4 LBT procedure to gain DL channel access. Upon successful LBT, in step 412, eNB 401 transmits a PDCCH with DCI to UE 402 for

PUSCH transmission. The DCI contains uplink grant including HARQ process indexes and redundancy version for HARQ re-transmission. For example, HARQ processes with indexes 5, 8, 15, and RV=2. In step 413, UE 402 performs an UL fast LBT procedure. Upon successful LBT, in step 414, UE 402 performs HARQ re-transmission over multiple subframes using HARQ process 5, 8, 15 and RV=2. Similarly, in step 421, eNB 401 performs a DL category 4 LBT procedure to gain DL channel access. Upon successful LBT, in step 422, eNB 401 transmits a PDCCH with DCI to UE 402 for PUSCH transmission. The DCI contains uplink grant including HARQ process indexes and redundancy version for HARQ re-transmission as well as new data transmission. For example, HARQ processes with indexes 5, 15, RV=1, and (1:4) new data transmission. In step 423, UE 402 performs an UL fast LBT procedure. Upon successful LBT, in step 424, UE 402 performs HARQ re-transmission over multiple subframes using HARQ process 5, 15 and RV=1 as well as new data transmission.

[0033] Figure 5 illustrates one embodiment of a DCI design with joint signaling. In accordance with one novel aspect, new data indication (NDI), HARQ index, and redundancy version (RV) carried in a DCI format can be jointly signaled. In the example of Figure 5, there are five states for a HARQ process: New data, RV=0 (retransmission), RV=1(retransmission), RV=2(retransmission), and RV=3(retransmission). Redundancy version (RV) 0 is assumed for a new data. The same HARQ process with "New data" is an implicit acknowledgement that the previous transmission on the same HARQ process is successful, the new transmission takes a MCS level from 0~28 as indicated in the DCI. If the eNB does not schedule further uplink transmission on the same HARQ process for the UE, a code state with the value for the MCS level at 29, 30 or 31 can be used with "New data" to acknowledge a previous transmission with giving a new UL grant. Furthermore, "Uplink subframe index" can take the meaning that "0" is for uplink transmission in subframe n+4, and "1" is for uplink transmission in subframe n+5. Instead of introducing a new field in the DCI format, another way to signal "Uplink subframe index" is to use masks over the CRC e.g. [0000 0000 0000 0000], [1111 0000 1111 0000] etc. If HARQ (Incremental redundancy) is supported, then DCI can signal NDI, HARQ process index and redundancy version jointly as shown in Figure 5.

[0034] If jointly signal HARQ process index, redundancy version and subframe index, the toal number of code states is given by

$$\sum_{n=1}^{N_t}\binom{N_{state}N_{max}}{n}\binom{N_t}{n}$$

Where

- N_{state} is the number of states including "New Data" and redundancy version,
- N_{max} is the maximum number of HARQ processes supported for an eLAA UL carrier,
- N_t is the maximum of suframes which can be scheduled by one DCI.

[0035] Note that non-contiguous subframes scheduled in one DCI is allowed. For example, when $N_t = 3$, two granted subframes can be subframes {k, k+1}, {k+1, k+2}, or {k, k+2}, subframe k is a reference timing say k = n+4. If only contiguous subframes can be scheduled in one DCI, then the number of code states can be reduced.

[0036] There is no simple way to acknowledge the previous HARQ transmissions: if HARQ bundling is not used, then each previously used HARQ process needs to be acknowledged separately. As a result, the physical channel design for PHICH can be revived for uplink HARQ acknowledgement and a new design is also necessary. First an Nack from PHICH does not trigger a retransmission as asynchronous HARQ is used eLAA. Second the PHICH resource to acknowledge an HARQ transmission is determined according to the resource interlace (e.g. the lowest resource interlace index), DMRS cyclic shift and timing the PUSCH transmission (e.g. subframe index of PUSCH transmission, or a relative timing with respect to a reference).

[0037] Figure 6 illustrates another embodiment of DCI design with joint signaling of NDI, HARQ process index and redundancy version. In the example of Figure 6, it is shown that there are five states for a HARQ process: New data, RV=0 (retransmission), RV=1(retransmission), RV=2(retransmission), RV=3(retransmission). Redundancy version (RV) 0 is assumed for a new data. The same HARQ process with "New data" is an implicit acknowledgement that the previous transmission on the same HARQ process is successful, the new transmission takes a MCS level from 0~28 as indicated in the DCI. If the eNB does not schedule

further uplink transmission on the same HARQ process for the UE, a code state with the value for the MCS level at 29, 30 or 31 can be used with "New data" to acknowledge a previous transmission with giving a new UL grant. For example, if 4 HARQ processes are scheduled by one DCI: HARQ process 1 with a new data, HARQ process 4 with retransmission at redundancy version 2, HARQ process 2 with a retransmission at redundancy version 3, HARQ process 6 with retransmission at redundancy version 3, then we can signal 0, 21, 25, 29 to the UE.

[0038] In general, if there are H HARQ processes at maximum at one cell, then there are $N = 4 \times H + H$ code states for each subframe, $4 \times H$ is for the 4 redundancy versions at all the HARQ processes, and H is for NDI at H HARQ processes. If non-contiguous transmission is supported (e.g. subframes 1, 2, 4 are scheduled and subframe 3 is skipped), then the number of code states at a subframe can be increased to $N = 5 \times H + 1$, where "1" is for "skipped scheduling". An illustration is given in Figure 6, when "skipped scheduling" is jointly encoded with NDI, HARQ process index, and redundancy version. With the example above, then we can signal $0 \times N^3 + 21 \times N^2 + 25 \times N + 29$ to the UE, which incorporates all the information to determine HARQ process index, redundancy version, NDI and scheduling timing.

[0039] Figure 7 is flow chart of a method of DCI design for PUSCH transmission with HARQ from base station perspective in eLAA in accordance with one novel aspect. In step 701, a base station transmits an uplink grant over a physical downlink control channel (PDCCH) to a user equipment (UE) in an orthogonal frequency division multiplexing (OFDM) wireless communications network. In step 702, the base station receives an uplink transmission in response to the uplink grant. The uplink transmission is applied with multiple Hybrid Automatic retransmission (HARQ) processes. The multiple HARQ processes have non-consecutive HARQ process IDs. In step 703, the base station transmits a downlink control information (DCI). The DCI comprises subsequent uplink grant information for HARQ data retransmission as well as HARQ new data transmission over multiple subframes.

[0040] Figure 8 is a flow chart of a method of DCI design for PUSCH transmission with HARQ from UE perspective in eLAA in accordance with one novel aspect. In step 801, a user equipment (UE) receives an uplink grant from a base station over a physical downlink control channel (PDCCH) in an orthogonal frequency division multiplexing (OFDM) wireless communications network. In step 802, the UE

transmits uplink data over a physical uplink shared channel (PUSCH) in response to the uplink grant. The PUSCH transmission is applied with multiple Hybrid Automatic retransmission (HARQ) processes. The multiple HARQ processes have non-consecutive HARQ process IDs. In step 803, the UE decodes a downlink control information (DCI) from the base station. The DCI comprises subsequent uplink grant information for HARQ data retransmission as well as HARQ new data transmission over multiple subframes.

[0041] Although the present invention has been described in connection with certain specific embodiments for instructional purposes, the present invention is not limited thereto. Accordingly, various modifications, adaptations, and combinations of various features of the described embodiments can be practiced without departing from the scope of the invention as set forth in the claims.

CLAIMS

1. A method, comprising:

receiving an uplink grant from a base station over a physical downlink control channel (PDCCH) by a user equipment (UE) in an orthogonal frequency division multiplexing (OFDM) wireless communications network;

transmitting uplink data over a physical uplink shared channel (PUSCH) in response to the uplink grant, wherein the PUSCH transmission is applied with multiple Hybrid Automatic retransmission (HARQ) processes, and wherein the multiple HARQ processes have non-consecutive HARQ process IDs; and

decoding a downlink control information (DCI) from the base station, wherein the DCI comprises subsequent uplink grant information for HARQ data retransmission as well as HARQ new data transmission over multiple subframes.

2. The method of Claim 1, wherein the DCI comprises resource allocation, modulation and coding scheme (MCS), new data indication (NDI), and transmit power information.

3. The method of Claim 2, wherein the DCI further comprises HARQ process IDs, redundancy versions (RVs), resource interlace allocation information, and uplink subframe index information.

4. The method of Claim 3, wherein the NDI, the HARQ process IDs, and the RVs are jointly signaled with a reduced number of bits.

5. The method of Claim 4, wherein a single index number is created to independently signal a corresponding NDI, a corresponding HARQ process ID, and a corresponding RV.

6. The method of Claim 3, wherein the DCI also indicates that the multiple subframes are contiguous.

7. The method of Claim 3, wherein the DCI also indicates that the multiple subframes are non-contiguous, and the non-contiguous subframes are jointly signaled with the NDI, the HARQ process IDs, and the RVs.

8. A user equipment (UE), comprising:

a receiver that receives an uplink grant from a base station over a physical downlink control channel (PDCCH) in an orthogonal frequency division multiplexing (OFDM) wireless communications network;

a transmitter that transmits uplink data over a physical uplink shared channel (PUSCH) in response to the uplink grant, wherein the PUSCH transmission is applied with multiple Hybrid Automatic retransmission (HARQ) processes, and wherein the multiple HARQ processes have non-consecutive HARQ process IDs; and

a decoder that decodes a downlink control information (DCI) from the base station, wherein the DCI comprises subsequent uplink grant information for HARQ data retransmission as well as HARQ new data transmission over multiple subframes.

9. The UE of Claim 8, wherein the DCI comprises resource allocation, modulation and coding scheme (MCS), new data indication (NDI), and transmit power information.

10. The UE of Claim 9, wherein the DCI further comprises HARQ process IDs, redundancy versions (RVs), resource interlace allocation information, and uplink subframe index information.

11. The method of Claim 10, wherein the NDI, the HARQ process IDs, and the RVs are jointly signaled with a reduced number of bits.

12. The method of Claim 11, wherein a single index number is created to independently signal a corresponding NDI, a corresponding HARQ process ID, and a corresponding RV.

13. The method of Claim 10, wherein the DCI also indicates that the multiple subframes are contiguous.

14. The method of Claim 10, wherein the DCI also indicates that the multiple subframes are non-contiguous, and the non-contiguous subframes are jointly signaled with the NDI, the HARQ process IDs, and the RVs.

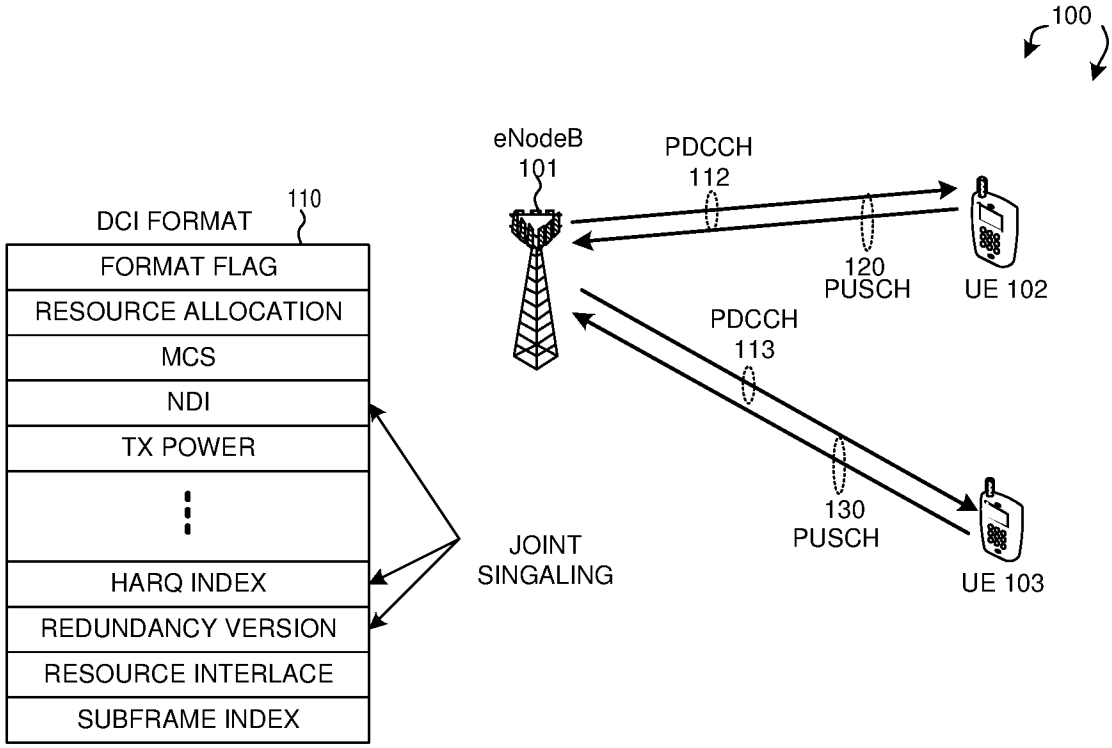
100
eNodeB
101
PDCCH
112
120
PUSCH
UE 102
PDCCH
113
130
PUSCH
UE 103
DCI FORMAT
110
FORMAT FLAG
RESOURCE ALLOCATION
MCS
NDI
TX POWER
HARQ INDEX
REDUNDANCY VERSION
RESOURCE INTERLACE
SUBFRAME INDEX
JOINT
SINGALING

FIG. 1

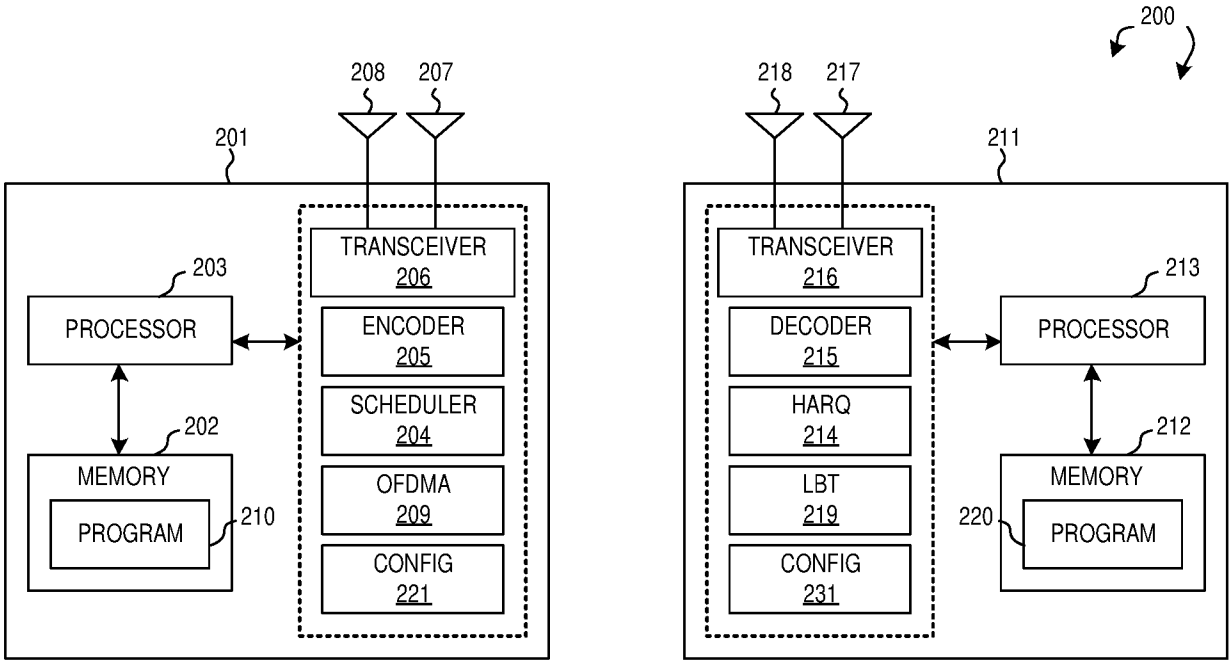
200
208
207
201
TRANSCEIVER
206
203
PROCESSOR
ENCODER
205
SCHEDULER
204
202
MEMORY
OFDMA
209
PROGRAM
210
CONFIG
221
218
217
211
TRANSCEIVER
216
213
DECODER
215
PROCESSOR
HARQ
214
212
LBT
219
MEMORY
220
PROGRAM
CONFIG
231

FIG. 2

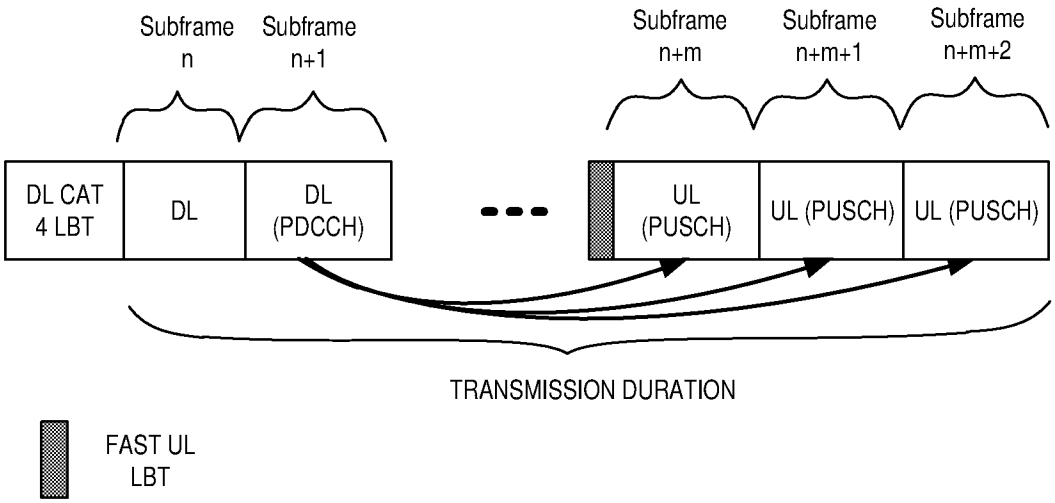
Subframe n
Subframe n+1
Subframe n+m
Subframe n+m+1
Subframe n+m+2
DL CAT 4 LBT
DL
DL (PDCCH)
UL (PUSCH)
UL (PUSCH)
UL (PUSCH)
TRANSMISSION DURATION
FAST UL LBT

FIG. 3

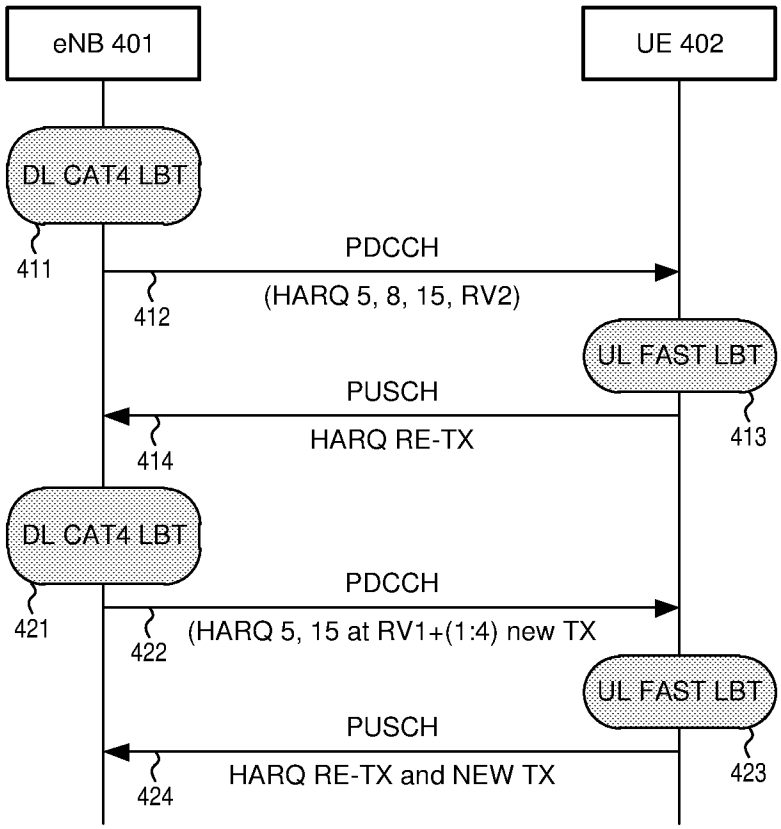
eNB 401
UE 402
DL CAT4 LBT
411
PDCCH
(HARQ 5, 8, 15, RV2)
412
UL FAST LBT
PUSCH
HARQ RE-TX
413
414
DL CAT4 LBT
421
PDCCH
(HARQ 5, 15 at RV1+(1:4) new TX
422
UL FAST LBT
PUSCH
HARQ RE-TX and NEW TX
423
424

FIG. 4

HARQ PROCESS 1	HARQ PROCESS 2	HARQ PROCESS 3	HARQ PROCESS 4	HARQ PROCESS 5	HARQ PROCESS 6
NEW DATA (RV0) (INDEX=0)	NEW DATA (RV0) (INDEX=1)	NEW DATA (RV0) (INDEX=2)	NEW DATA (RV0) (INDEX=3)	NEW DATA (RV0) (INDEX=4)	NEW DATA (RV0) (INDEX=5)
RV0 (INDEX=6)	RV0	RV0	RV0	RV0	RV0
RV1	RV1	RV1	RV1	RV1	RV1
RV2	RV2	RV2	RV2	RV2	RV2
RV3	RV3	RV3	RV3	RV3 (INDEX=28)	RV3 (INDEX=29)

FIG. 5

HARQ PROCESS 1	HARQ PROCESS 2	HARQ PROCESS 3	HARQ PROCESS 4	HARQ PROCESS 5	HARQ PROCESS 6
NEW DATA (RV0) (INDEX=0)	NEW DATA (RV0) (INDEX=1)	NEW DATA (RV0) (INDEX=2)	NEW DATA (RV0) (INDEX=3)	NEW DATA (RV0) (INDEX=4)	NEW DATA (RV0) (INDEX=5)
RV0 (INDEX=6)	RV0 (INDEX=7)	RV0 (INDEX=8)	RV0 (INDEX=9)	RV0 (INDEX=10)	RV0 (INDEX=11)
RV1 (INDEX=12)	RV1 (INDEX=13)	RV1 (INDEX=14)	RV1 (INDEX=15)	RV1 (INDEX=16)	RV1 (INDEX=17)
RV2 (INDEX=18)	RV2 (INDEX=19)	RV2 (INDEX=20)	RV2 (INDEX=21)	RV2 (INDEX=22)	RV2 (INDEX=23)
RV3 (INDEX=24)	RV3 (INDEX=25)	RV3 (INDEX=26)	RV3 (INDEX=27)	RV3 (INDEX=28)	RV3 (INDEX=29)

SKIPPED: INDEX = 30

FIG. 6

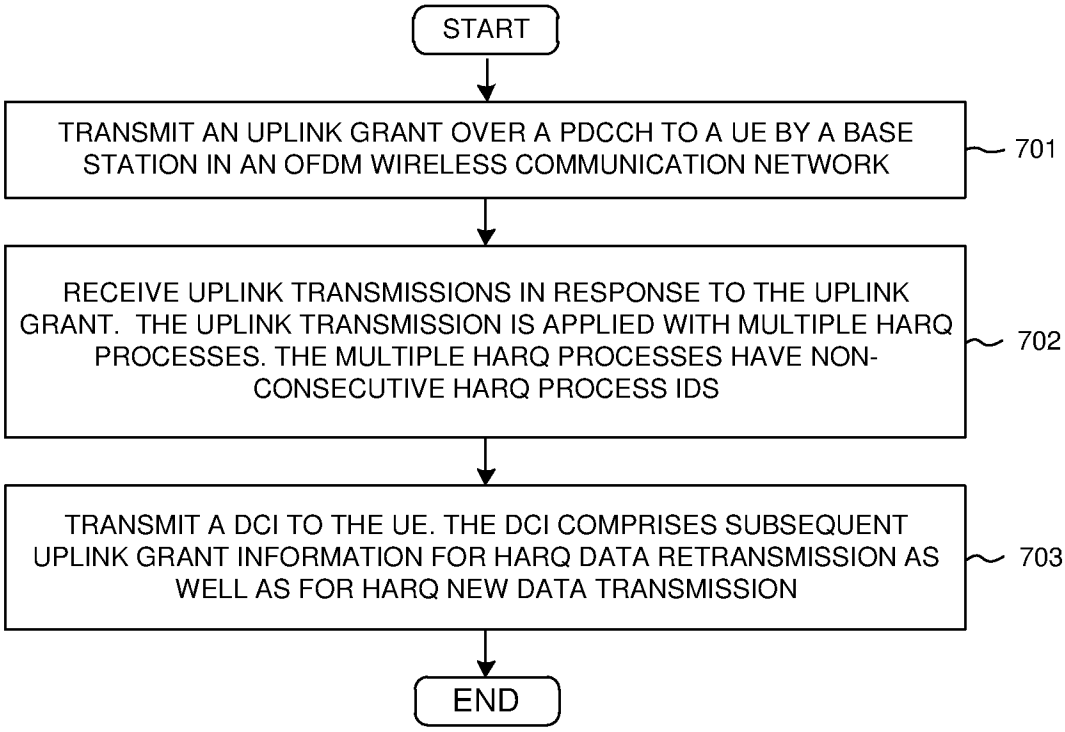
START
TRANSMIT AN UPLINK GRANT OVER A PDCCH TO A UE BY A BASE STATION IN AN OFDM WIRELESS COMMUNICATION NETWORK
701
RECEIVE UPLINK TRANSMISSIONS IN RESPONSE TO THE UPLINK GRANT. THE UPLINK TRANSMISSION IS APPLIED WITH MULTIPLE HARQ PROCESSES. THE MULTIPLE HARQ PROCESSES HAVE NON-CONSECUTIVE HARQ PROCESS IDS
702
TRANSMIT A DCI TO THE UE. THE DCI COMPRISES SUBSEQUENT UPLINK GRANT INFORMATION FOR HARQ DATA RETRANSMISSION AS WELL AS FOR HARQ NEW DATA TRANSMISSION
703
END

FIG. 7

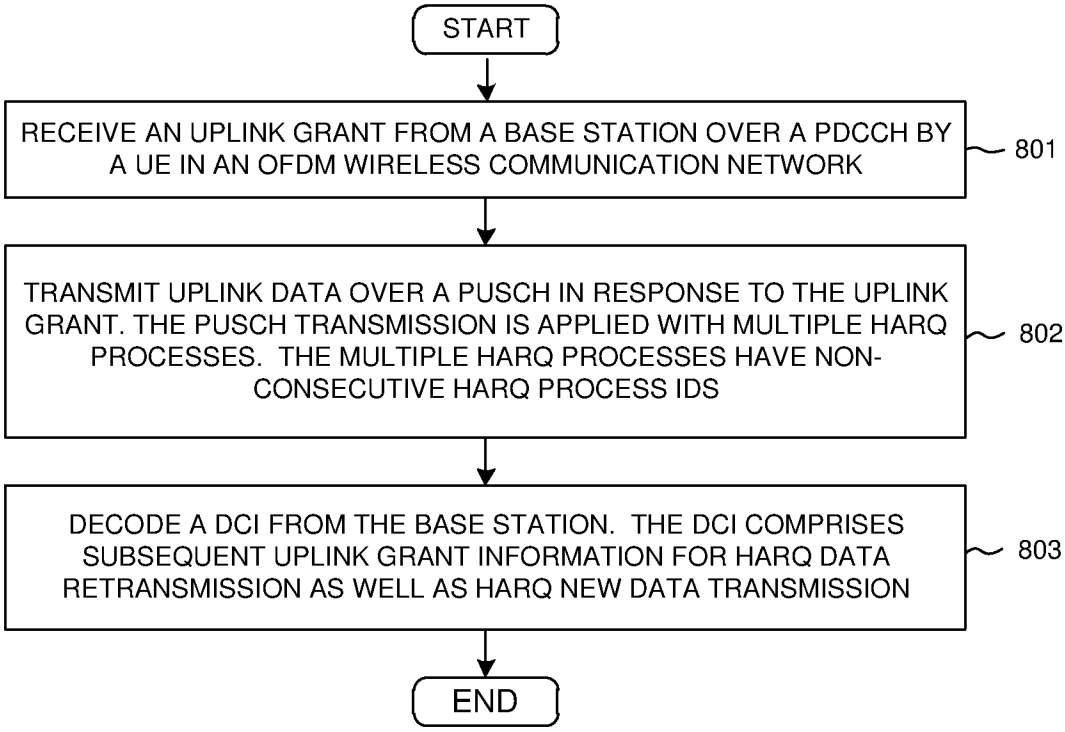
START
RECEIVE AN UPLINK GRANT FROM A BASE STATION OVER A PDCCH BY A UE IN AN OFDM WIRELESS COMMUNICATION NETWORK
801
TRANSMIT UPLINK DATA OVER A PUSCH IN RESPONSE TO THE UPLINK GRANT. THE PUSCH TRANSMISSION IS APPLIED WITH MULTIPLE HARQ PROCESSES. THE MULTIPLE HARQ PROCESSES HAVE NON-CONSECUTIVE HARQ PROCESS IDS
802
DECODE A DCI FROM THE BASE STATION. THE DCI COMPRISES SUBSEQUENT UPLINK GRANT INFORMATION FOR HARQ DATA RETRANSMISSION AS WELL AS HARQ NEW DATA TRANSMISSION
803
END

FIG. 8

INTERNATIONAL SEARCH REPORT

International application No.
PCT/CN2017/079199

A. CLASSIFICATION OF SUBJECT MATTER

H04L 1/18(2006.01)i

According to International Patent Classification (IPC) or to both national classification and IPC

B. FIELDS SEARCHED

Minimum documentation searched (classification system followed by classification symbols)

H04L; H04W; H04Q

Documentation searched other than minimum documentation to the extent that such documents are included in the fields searched

Electronic data base consulted during the international search (name of data base and, where practicable, search terms used)

WPI;EPODOC;IEEE;3GPP,CNPAT;CNKI:PDCCH, PUSCH, HARQ, ID, DCI, uplink, grant, data, LAA, process+

C. DOCUMENTS CONSIDERED TO BE RELEVANT

Category*	Citation of document, with indication, where appropriate, of the relevant passages	Relevant to claim No.
X	CN 102447549 A (POTEVIO INSTITUTE OF TECHNOLOGY CO., LTD.) 09 May 2012 (2012-05-09) paragraphs [0003]-[0005] in description	1-14
A	CN 104348597 A (BEIJING SAMSUNG COMMUNICATION TECHNOLOGY ET AL.) 11 February 2015 (2015-02-11) the whole document	1-14
A	CN 102647248 A (LG ELECTRONICS INC.) 22 August 2012 (2012-08-22) the whole document	1-14
A	US 2013336160 A1 (SHARP KABUSHIKI KAISHA) 19 December 2013 (2013-12-19) the whole document	1-14
A	SAMSUNG. "SPECIFICATION SUPPORT FOR FDD-TDD CA" *3GPP TSG RAN WG1 #74bis R1-134168*, 11 October 2013 (2013-10-11), the whole document	1-14

☐ Further documents are listed in the continuation of Box C. ☑ See patent family annex.

* Special categories of cited documents:

"A" document defining the general state of the art which is not considered to be of particular relevance

"E" earlier application or patent but published on or after the international filing date

"L" document which may throw doubts on priority claim(s) or which is cited to establish the publication date of another citation or other special reason (as specified)

"O" document referring to an oral disclosure, use, exhibition or other means

"P" document published prior to the international filing date but later than the priority date claimed

"T" later document published after the international filing date or priority date and not in conflict with the application but cited to understand the principle or theory underlying the invention

"X" document of particular relevance; the claimed invention cannot be considered novel or cannot be considered to involve an inventive step when the document is taken alone

"Y" document of particular relevance; the claimed invention cannot be considered to involve an inventive step when the document is combined with one or more other such documents, such combination being obvious to a person skilled in the art

"&" document member of the same patent family

Date of the actual completion of the international search	Date of mailing of the international search report
29 May 2017	**23 June 2017**

Name and mailing address of the ISA/CN	Authorized officer
STATE INTELLECTUAL PROPERTY OFFICE OF THE P.R.CHINA **6, Xitucheng Rd., Jimen Bridge, Haidian District, Beijing 100088** **China**	**ZUO,Linzi**
Facsimile No. **(86-10)62019451**	Telephone No. **(86-10)62413364**

INTERNATIONAL SEARCH REPORT
Information on patent family members

International application No.
PCT/CN2017/079199

Patent document cited in search report			Publication date (day/month/year)	Patent family member(s)			Publication date (day/month/year)
CN	102447549	A	09 May 2012	None			
CN	104348597	A	11 February 2015	None			
CN	102647248	A	22 August 2012	EP	2490362	A1	22 August 2012
				US	2014204878	A1	24 July 2014
				US	2016080129	A1	17 March 2016
				US	2012207111	A1	16 August 2012
				KR	20120093760	A	23 August 2012
				JP	2012170080	A	06 September 2012
				TW	201246996	A	16 November 2012
				TW	201601573	A	01 January 2016
				CN	105406944	A	16 March 2016
US	2013336160	A1	19 December 2013	KR	20150023626	A	05 March 2015
				EP	2862400	A1	22 April 2015
				CN	104521304	A	15 April 2015
				JP	2015523745	A	13 August 2015
				WO	2013187072	A1	19 December 2013