June 27, 1944. B. A. PROCTOR 2,352,285

METHOD OF MAKING PHONOGRAPH RECORD STAMPER

Filed Sept. 19, 1936 2 Sheets-Sheet 1

Fig. 1.

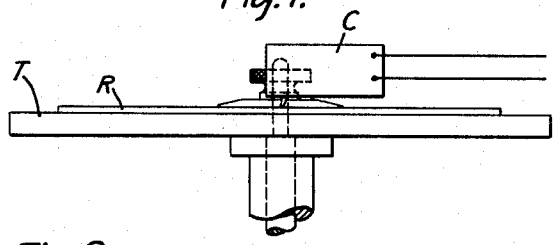

Fig. 2.

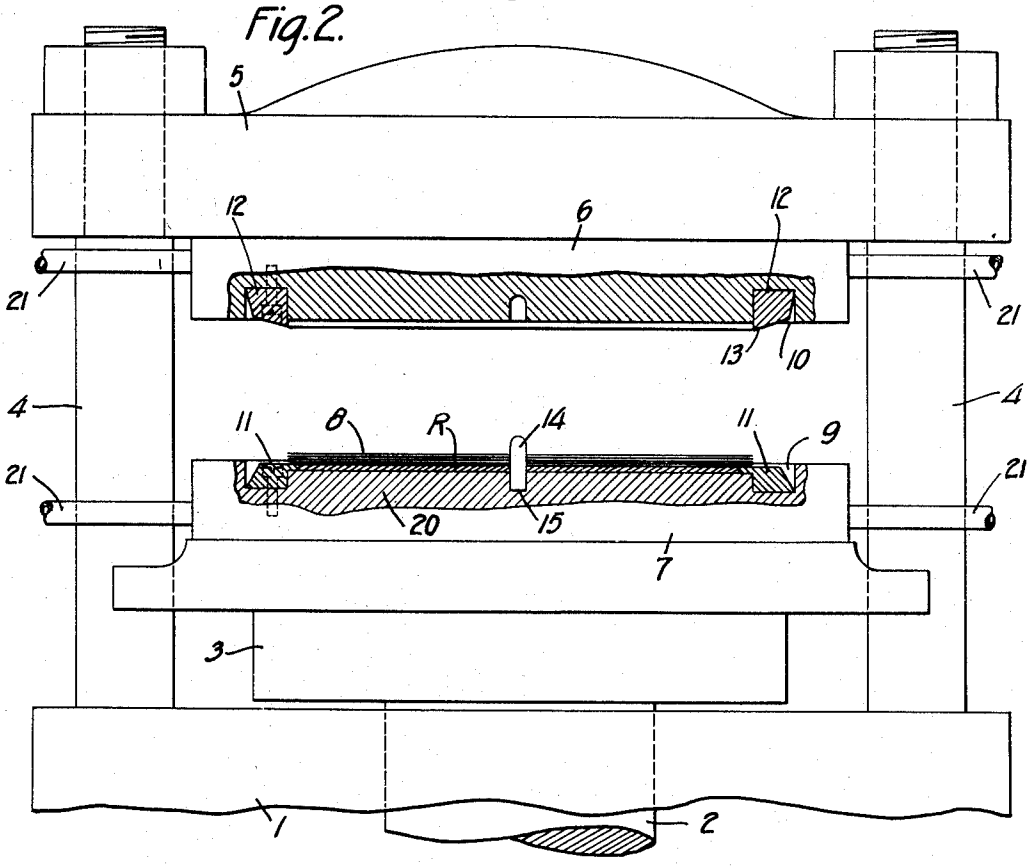

Fig. 3.

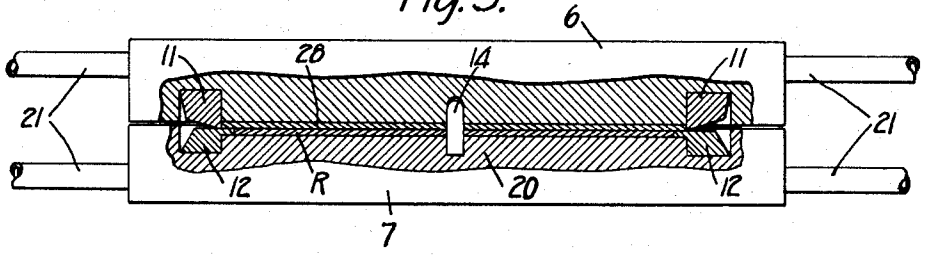

INVENTOR.
Barton A. Proctor.

BY Moses & Nolte

ATTORNEYS

June 27, 1944. B. A. PROCTOR 2,352,285

METHOD OF MAKING PHONOGRAPH RECORD STAMPER

Filed Sept. 19, 1936 2 Sheets-Sheet 2

Fig. 4.

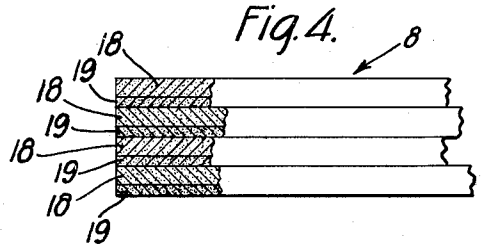

Fig. 5.

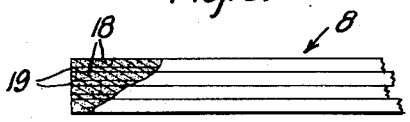

Fig. 6.

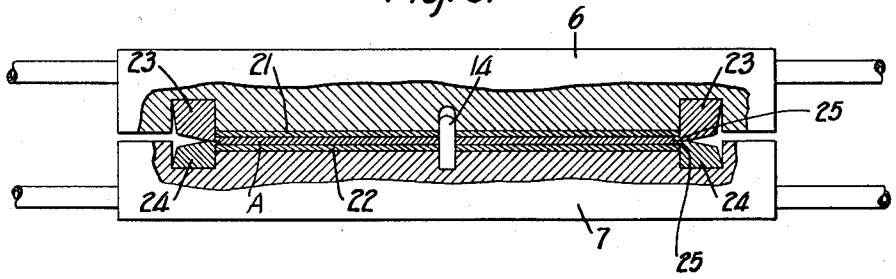

Fig. 7.

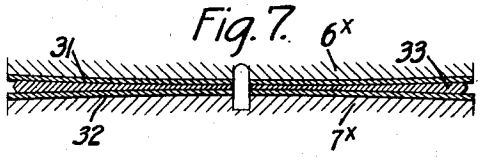

Fig. 8.

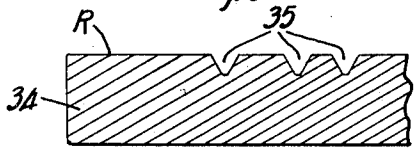

Fig. 9.

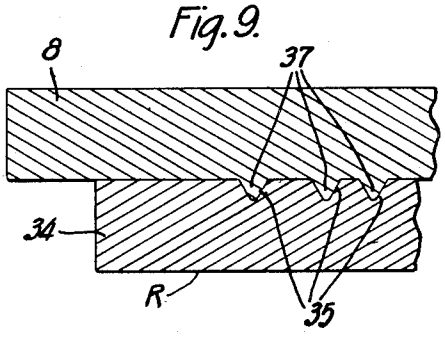

Fig. 10.

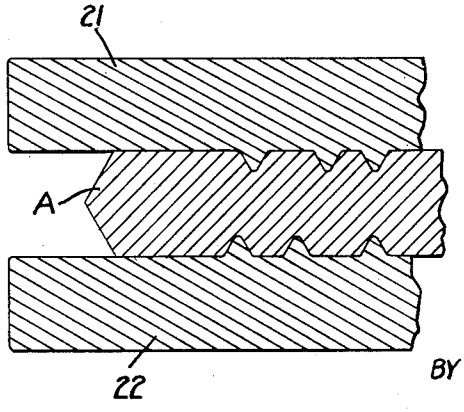

Fig. 11.

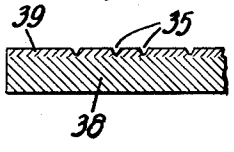

INVENTOR.
Barton A. Proctor.
BY Moses & Nolte
ATTORNEYS

Patented June 27, 1944 2,352,285

UNITED STATES PATENT OFFICE

2,352,285

METHOD OF MAKING PHONOGRAPH RECORD STAMPERS

Barton A. Proctor, Larchmont, N. Y., assignor to B. A. Proctor Company, Inc., New York, N. Y., a corporation of New York

Application September 19, 1936, Serial No. 101,677

4 Claims. (Cl. 154—2)

This invention relates to the production of sound records and has for its general object to expedite the fabrication of phonograph records and to economize in their manufacture, especially by reduction in the time required for such fabrication and in the cost of equipment.

More particularly, the novel process herein disclosed effects a notable reduction in the time of manufacture, which has been cut to twenty minutes, as compared with the inordinate time of from twenty-four to thirty-six hours required to complete records when made by the conventional method, involving several steps which have been eliminated by the method of the present invention.

The well-known conventional method comprises the step of recording the sound track upon a wax blank, thus forming the original master, upon which is electro-deposited a shell of metal which then becomes the master, as the stylus-produced original wax master is destroyed during the stripping from the electro-deposited sheet, and the wax original thus lends itself only to the formation of one metal reproduction.

As this metal master, which is called a "stamper," can only be used in one press at a time, it is necessary to use it as an original master for making other stampers, according to the number of presses to be used in mass production of the final playing records, the latter being pressed out of thermo-setting plastic material for sale as the final playing records. Each metal stamper is therefore a reproduction of a reproduction, and there is a loss of quality due to the several replating steps in this conventional process, which need not be further elaborated, as its disadvantages are generally recognized.

Under such conditions, particular objects of the present invention are:

To provide an original master record of sturdy structure which goes directly from the recording machine to the hydraulic press, in which same press any desired number of finished master records (stampers) can be made therefrom directly, without loss of character such as is caused by the electro-plating steps briefly mentioned already; also to provide a sturdy original master record which can be kept indefinitely and may be used to fabricate other fresh stampers after the earlier stampers become worn by excessive use.

A cognate object of the invention is to provide a method of producing the original sturdy master record in metal, so that it is possible to eliminate over fifty per cent of the manufacturing equipment heretofore found indispensable in the production of records by the above described conventional method, including wax temperature-control apparatus, a shaving machine; electro-plating equipment; and cleansing, marking and finishing apparatus.

The present invention avoids the above disadvantages and accomplishes the above desirable improvements, and others which will be made to appear in the course of the following disclosure, by providing a novel method according to which in the first place, a cutter of the crystal-operated type is employed, having sufficient power to deform a sound track of adequate depth and side-wall characteristics in a metallic blank which is of sufficient hardness to withstand hydraulic pressure of approximately 2000 lbs. per sq. inch without essential damage to the sound-groove structure, the latter being characterized by a complete audio frequency range.

The recorder thus provided makes it possible to utilize for the material of the blank, in which the sound track is recorded, either a solid metal, such as aluminum, or a duplex metal blank, preferably comprising a layer of metal, such as tin, in which the sound track is recorded, and a body plate of thin sheet steel.

The layer of tin, or other like suitable metal, may be electrically, or deposited by any suitable method, and will be of suitable depth to take the sound groove. Such a layer has the advantage, over a rolled integral plate, of being absolutely grainless, and characterized by homogeneous molecular distribution of the metal. In other words, the tin layer is free from cracks and from stresses due to rolling, and from other disturbances of the molecular arrangement and other imperfections which are caused by the rolling process.

The steel backing of this novel record blank provides additional advantages, in that it prevents creeping or flow of the metal under hydraulic pressure, and the tin facing has a desirable chemical reaction with the plastic, as compared with the aluminum.

Owing to the greater hardness of the material used, as compared with the softer metal ones produced by the electro-depositing process, the matrices made of steel-tin duplex structure wear better than the matrices made conventionally heretofore. The expansion factor and contraction factor, under the heating and chilling operations incidental to pressing records, are considerably less than those of the old electro-shells.

Inasmuch as the matrix produced by the novel method of the present invention can be of the same thickness (say .004 of an inch) as those of electro-plates, the new matrices can be trimmed at their centers and peripheries as easily as any of the older matrices, so that they may be handled by any plant equipped for that purpose. Because of their flexibility, they can be used in crowned dies to accommodate themselves to the shape of the dies, from which they take a slightly arcuate shape.

In making a stamper from the original matrix, solid metal or composite, several layers (say ten) of a sheet material such as Bakelite-impregnated

paper coated on its upper side with Bakelite impregnating-varnish are placed in a press under heat and pressure for approximately fifteen minutes, to be cured, including the requisite chilling, and the assembly is then removed for trimming at its edge. The center hole is moulded, and the stamper thus completed can be duplicated by the similar production from the original matrix of as many stampers as are required for use in the presses being run.

The invention provides for mixing with the impregnated Bakelite a metallic powder such as aluminum or bronze in order to increase the thermal conductivity of the mass both in the heating and cooling steps, and thereby to reduce cost of manufacture still further, the metal particles also serving to reinforce the mass and add to its stability. The metallic powder also serves to aid in preventing distortion of the finished stamper when subsequently used in stamping the final records.

An important factor in such prevention of distortion of the stamper resides in its laminated structure, which retards the freedom of flow of the (Bakelite) thermosetting material, which might otherwise result in distortion of the finished stamper, as will be readily understood when it is realized that the shrinkage is of a very high order.

Here also the factor of expansion and contraction respectively under the heating and chilling during the operation of pressing records is considerably less than in the case of the old metal stamper produced by electrodeposition. The laminated structure also permits a flat stamper to flex to the shape of a crowned die without any such cracking as frequently accompanied attempts to flex stampers of the conventional type.

The last operation in the fabrication of playing records for the market consists in pressing thermoplastic material of any suitable character, such as cellulose acetate, with the stamper, in the same die as that in which the stamper has been produced by pressure of the metal master against the blank for the stamper, it being understood, however, that because the playing records are of slightly smaller diameter, a confining ring is used between the upper and lower stampers which are employed in impressing records upon the obverse and reverse sides of the final record blank material.

In the accompanying drawings:

Fig. 1 is a fragmentary, detail view in front elevation of a recording mechanism adapted to be used in carrying into effect the method of the present invention.

Fig. 2 is an elevational view partly in section, of a press used in the fabrication of stampers and records according to the novel method of the present invention, the press being illustrated in open position with the die elements, master, and stamper components assembled in position for the operation of producing a stamper;

Fig. 3 is a fragmentary view in elevation, partly in section, showing the dies closed upon a stamper matrix formed by pressure of the components as illustrated in Fig. 2;

Fig. 4 illustrates in fragmentary, detail form, the ends of an assembly of components for a stamper, broken away to show the typical laminated structure of the stamper in course of formation;

Fig. 5 is a view similar to Fig. 4, illustrating the compressed components of Fig. 4;

Fig. 6 is a view similar to Fig. 3, but showing two stampers, associated with a pair of die members, and closed upon a blank of thermo-setting material, such as cellulose acetate, in the course of making a two-faced record;

Fig. 7 is a detail view in vertical section taken across the diameter of an assembly including a blank of thermo-setting material ready to be pressed between two stampers associated with crowned dies in the production of a two-faced record;

Fig. 8 is a fragmentary, detail view in greatly enlarged vertical section of one end of a metal record, with part of a sound track recorded therein;

Fig. 9 is a similar view of the same, but showing also the stamper blank which has been pressed thereinto;

Fig. 10 is a similar view showing in detail the left-hand end of the same disposition of stampers on each side of a blank, as shown in Fig. 6; and

Fig. 11 is a fragmentary detail view of a portion of a duplex metal record blank having a body of sheet steel and a face layer of tin in which a sound track has been recorded.

In a now-preferred embodiment of the invention illustrated in the drawings, the parts designated by the reference characters **1**, **2**, **3**, **4** and **5**, respectively, are the base, plunger, plate, side pillars and head of a press in which the dies **6** and **7** are ready for use in pressing a stack of paper stamper-component laminae **8** together with Bakelite impregnant for the purpose of forming a master or stamper from the metal record R in which the sound track has been recorded.

Each of the dies **6** and **7** is cut away near its margin to form a groove, as **9**, **10**, of annular form, and each of the grooves has seated therein a suitable shear member **11**, **12** respectively, the shear **12** taking the form of a ring with an inwardly disposed cutting edge as **13**, and the ring **11** in die **7** serves as an abutment shear against the upper face of which the cutting edge **13** forces and pinches the material. The dowel **14**, set at **15** in the material **20** of the die, acts to mold the central hole of the stampers and of the records.

When the plunger **2** rises and forces the die **7**, heated suitably, as by pipes **21**, against the die **6**, and compresses the stack **8** of laminae therebetween, the master stamper assumes the form shown in Fig. 3, and the record **28** now contains a replica in complete reverse detail of the sound track which had already been formed in the metal blank R by a suitable recording operation, such as that indicated schematically in Fig. 1, where C is a recorder head of the crystal-recording type, R is the master record blank having a body **38** of sheet steel with a face layer **39** of tin (see Fig. 11), in which the sound track is being made, and T is a rotatable table of conventional form.

Reference may be had to my co-pending application Serial No. 38,032 for a more detailed disclosure of a preferred type of crystal-recording mechanism in which the master record may be made.

With respect to the structure and fabrication of the stampers, the steps included in the preferred method for their fabrication as indicated in Figs. 2, 4 and 5 may be summarized as follows:

Several layers of Bakelite impregnated paper, **18** (see Figs. 4 and 5), each of which is coated on one side, as at **19**, with Bakelite varnish, are

assembled, as shown in Fig. 2 at **8** upon the record R which has been produced as indicated in Fig. 1. The face of this master which contains the sound track is presented upwardly, as in Fig. 8, and preferably the record R is either of solid metal, such as aluminum, or of duplex metal constituted by a sheet steel base and a tin facing in which the sound track has been recorded.

In Figs. 4 and 5, the stippling observable throughout the layers **18** and **19** indicates the presence therein of finely divided metallic powder, such as aluminum or bronze powder.

This, as already pointed out briefly, serves to increase the conductivity and to cut down the time occupied in heating or chilling, so that the cost of manufacture is thus reduced. It also adds to the stability of the mass due to the reinforcement thereof afforded by the metal particles. The presence of the metal particles, furthermore, checks the freedom of flow of the thermo-setting material and so avoids distortion. It does not, however, interfere with suitable flexing of the stamper when associated with a crowned die as illustrated in Fig. 7.

When the composite blank **8**, composed of layers **18** and **19**, has been compressed, as shown in Fig. 5, the stamper structure thus produced is notably stronger than an electrolytically produced shell, and accordingly more, and better, playing, or final, records can be fabricated with the use of such a stamper in the dies.

In Fig. 6, two such stampers are shown, as at **21** and **22** respectively, above and below a blank A of cellulose acetate, which is being pressed therebetween to form a double faced record. The blank A is of somewhat smaller diameter than the masters **21** and **22**, and, accordingly, each die **23**, **24** is formed with a peripheral flange **25** which is of annular form, suitable to constitute an abutment, and thus to confine the plastic material, and each of the duplex ring components serves also as a retaining ring for the master which it surrounds, the flanges **25** extending inwardly over the rims of the masters, as shown clearly in Fig. 6.

There is substantially no waste of material in the fabrication of the final product, and its advantages in point of economy are of an outstanding character.

As already indicated, the process and the instrumentalities utilized, lend themselves to the correct flexure of the initially flat stampers into convexly arcuate form by association with crowned dies in the production of concavely arcuate records, impressed for playing, and an example of such use is illustrated in Fig. 7, in which the masters **31** and **32** are used in a press like that shown in Fig. 6, except that crowned dies are being used, the flexibility of the master components making such conformation to the crowned dies possible.

Similarly, the blank **33** of Fig. 7, composed of cellulose acetate material, takes readily the impress of the masters **31** and **32** thus flexed to arcuate form, and possesses all of the desirable features to be predicated of a concavely arcuate record.

The Fig. 6 assembly of masters **21** and **22** is shown in detail on a larger scale in vertical section in Fig. 10 where the clearly impressed sound record pressed in the two faces of the blank A by the superimposed masters is well illustrated.

Fig. 8 shows, in similarly enlarged detail a master original record R comprising a body **34** of solid metal, in which the sound track **35** has been deformed by operation of a crystal recorder head or mechanism as shown in Fig. 1; and Fig. 9 shows said master in course of use to form a negative stamper record **8** which has been made by pressing together a laminated assembly of the components shown in Figs. 2–5, and described above, with the aforesaid original master R.

Each stamper **8** so produced may be used in the manner shown at **21** and **22** or **31** and **32**, in forming an indefinite number of the cellulose acetate, or like records as shown at A in Fig. 6, or as shown in Fig. 10, whether single-faced or double-faced, and the records so produced, both stamper negatives and final playing records, preserve with remarkable fidelity, in their sound tracks, the fine qualities of the originals of which they are replicas, being greatly superior to the equivalent replicas fabricated from electrolytically deposited stampers.

I have described what I believe to be the best embodiments of my invention. I do not wish, however, to be confined to the embodiments shown, but what I desire to cover by Letters Patent is set forth in the appended claims.

I claim:

1. In the fabrication of sound records, the method of forming a laminated stamper which comprises the steps of dispersing a finely divided metallic powder in a thermosetting plastic material, applying the plastic material containing the metallic powder to the surface of a sheet of soft, fibrous material to form a coating, and heating the treated sheet material to condition it to receive the impression of a sound track in the coated surface thereof.

2. In the fabrication of sound records, the method of making a stamper which comprises the steps of mixing a finely divided metallic power in a thermo-setting plastic material in proportions to obstruct the flow of plastic and to promote equable heat transfer during curing, impregnating a disc of soft fibrous material with the resulting plastic mixture and heating and simultaneously compressing the impregnated disc to condition its surface to receive the impression of a sound track therein.

3. In the fabrication of sound records, the method of making a stamper which comprises the steps of mixing a finely divided metallic powder in a thermo-setting plastic material in proportions to obstruct the flow of plastic and to promote equable heat transfer during curing, impregnating a plurality of separate fibrous laminae with the resulting plastic mixture and heating and simultaneously compressing the laminae together to form a stamper and condition the outer face thereof to receive the impression of a sound track therein.

4. In the fabrication of sound records, the method of making a stamper which comprises the steps of mixing a finely divided metallic powder in a thermo-setting plastic material in proportions to obstruct the flow of plastic and to promote equable heat transfer during curing, impregnating a plurality of paper discs with the resulting plastic mixture, arranging the impregnated discs to form a stack, coating the surface of the outer disc with a thermo-setting varnish mixed with finely divided metallic powder, and heating and simultaneously compressing the discs together to form a stamper and condition the coated surface of the outer disc to receive the impression of a sound track therein.

BARTON A. PROCTOR.