United States Patent [19]

Hamberger

[11] **3,836,419**

[45] **Sept. 17, 1974**

[54] **SUPPORTS FOR ORNAMENTAL DESIGNED ARTICLES**

[75] Inventor: **Lois-Inez Hamberger,** Bethesda, Md.

[73] Assignee: **Eva Ehrlich,** Bethesda, Md. ; a part interest

[22] Filed: **Apr. 17, 1973**

[21] Appl. No.: **361,315**

[52] **U.S. Cl.** **161/18,** 40/104.19, 40/124.4, 40/152.1, 40/159

[51] **Int. Cl.** **B44f 7/00**

[58] **Field of Search** 161/18; 40/104.19, 152.1, 40/124.1, 124.4, 158, 159

[56] **References Cited**

UNITED STATES PATENTS

2,226,176	12/1940	O'Brien	40/159
2,603,018	7/1952	Cages	40/152.1
2,984,922	5/1961	Ladenburger et al.	40/159
3,382,595	5/1968	Shore	40/158

Primary Examiner—William E. Schulz

[57] **ABSTRACT**

This invention is an easel, desk or hanging support for a framing means to be surrounded by ornamental rectangular plan or flat carriers, and as such can be desk or table ornament or a hanging ornament.

3 Claims, 3 Drawing Figures

FIG.2

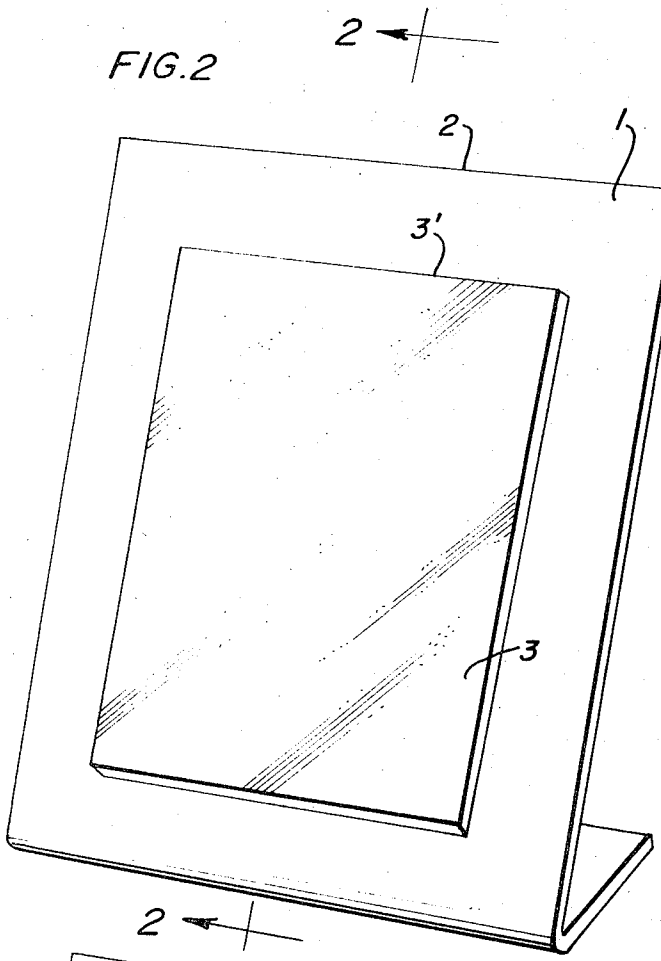

FIG3

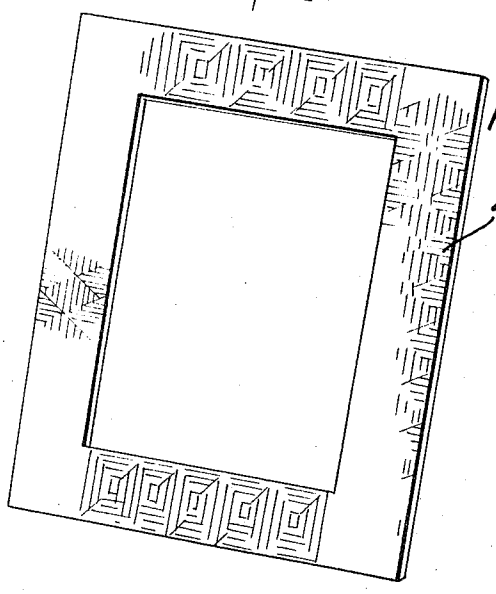

FIG.2

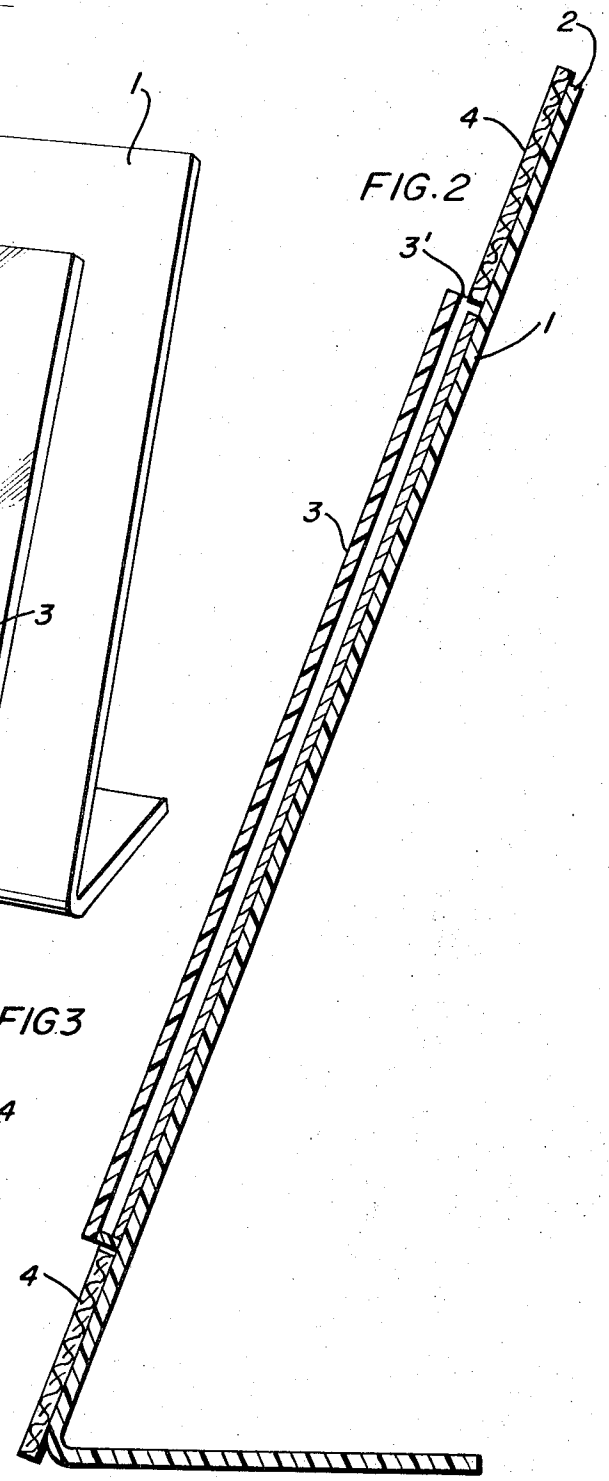

SUPPORTS FOR ORNAMENTAL DESIGNED ARTICLES

The present invention relates to improvements in SUPPORTS FOR ORNAMENTAL DESIGNED ARTICLES, the main object of the same being the provision of a support having varied upon its face a projected element that maybe of any desired shape, that is rectangular, oval or round, so that the ornamental frame like member may be easily connected or unconnected to thus permit many changes.

In order that the invention may be clearly and fully understood and its advantages appreciated, attention is invited to the accompanying drawings, in which:

FIG. 1 is a plan view of the support in easel formation with the raised rectangular portion broken away at upper corner

FIG. 2 is a section on line 2—2 of FIG. 1.

FIG. 3 is a front view of one ornamental rectangular frame member.

Refering to the drawings, the numeral 1, designates a rectangular flat support to be composed primarily of a plastic material, having the upper angular edge 2, and

carrying upon its face a raised rectangular member 3, open at the top 3' for the insertion of photographs to be visable through its transparent face and is the support for the open rectangular ornament carrying flat member 4.

From the foregoing it will be apparent here is provided a device that can be a desk, table or wall ornament.

What is claimed as new is:

1. An ornate supporting device consisting of a flat rectangular support, a raised rectangular member of lesser size than the main support carried by the main support, and a removable ornate rectangular flat member fitting removably upon the latter.

2. An ornate supporting device as claimed in claim 1, wherein integral with one edge of the main support is an angularly disposed edge that acts to support the device at an angle upon a flat supporting surface.

3. An ornate supporting device as claimed in claim 1, wherein the raised rectangular member is transparent and open at the top to form a carrier member.

* * * * *