Dec. 2, 1952 R. M. W. JOHNSON ET AL 2,620,396

ULTRAHIGH-FREQUENCY ATTENUATOR

Filed Sept. 5, 1950

FIG. 2.

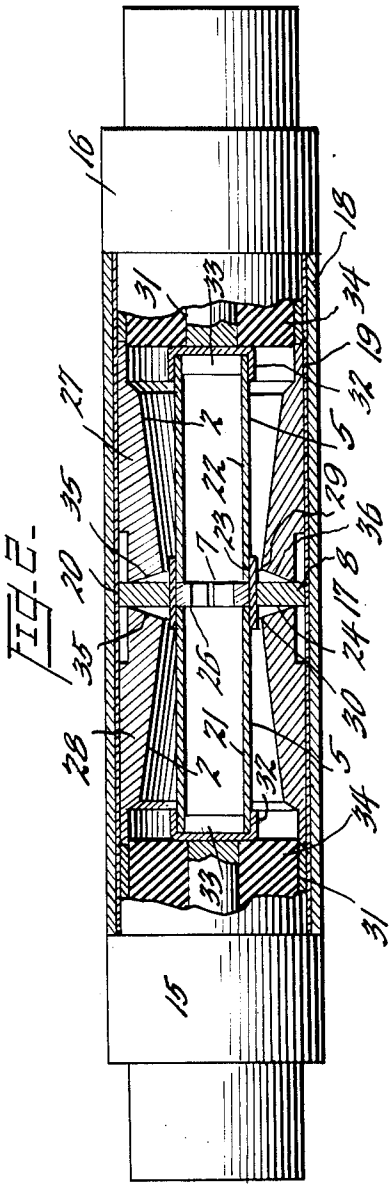

FIG. 1.

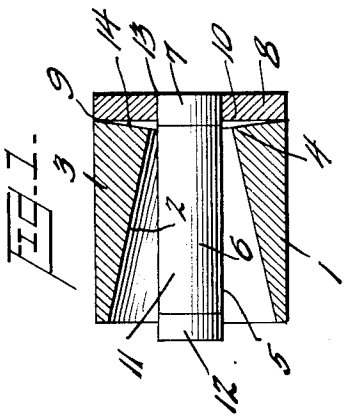

INVENTORS

James W. Shaw

Ralph M. W. Johnson

Edwin J. Greigg

Attorneys

Patented Dec. 2, 1952

2,620,396

UNITED STATES PATENT OFFICE

2,620,396

ULTRAHIGH-FREQUENCY ATTENUATOR

Ralph M. W. Johnson and James W. Shaw, Los Angeles, Calif., assignors to Stoddart Aircraft Radio Company, Los Angeles, Calif.

Application September 5, 1950, Serial No. 183,202

5 Claims. (Cl. 178—44)

1

This invention relates to ultra high frequency apparatus, and to resistive attenuators incorporated therein and more particularly relates to an improved T section resistive attenuator designed for use in an ultra high frequency coaxial transmission line.

The transmission of energy at ultra high frequencies requires apparatus specially designed for that purpose if the energy to be passed through the transmission line is to suffer but slight attenuation and if that initial energy is to be maintained at a constant and unchanging phase relationship. It, however, is recognized that this ideal situation does not ordinarily exist in a transmission line of any appreciable length and further that at such frequencies discontinuities within the line and the changing electrical and physical characteristic of the coaxial line itself may result in phase errors and undesired attenuation of the signal to be transmitted.

It is therefore one purpose of this invention to provide a device which will compensate for phase errors and undesired attenuation existing in a given transmission line.

It is well recognized in the art dealing with ultra high frequency transmission that the net propagation function of any transmission line may be made to approximate the ideal, heretofor referred to, if it incorporates special networks whose attenuation and phase characteristics very nearly counter-balance existing discrepancies in the transmission line. These special networks may perform an important function as impedance correctors.

It is apparent to those skilled in this art that a transmission line has a given characteristic impedance depending upon the physical and electrical parameters of the line and that this characteristic impedance may change over a given length of transmission line. These special networks may correct for this changing characteristic impedance of a transmission line in order to make it appear more resistive over the frequency range to be transmitted. This function of such special networks is of particular importance in those situations in which the coaxial transmission line is to serve in a circuit designed for duplex operation, i. e., the transmission line is designed to handle currents traveling in either direction throughout its length.

In any such transmission system it is desirable to have impedance matching between elements of the line so that there will be a minimum of discontinuity in the system. While it is recognized that a particular resistive configuration

2

may be employed in an ultra high frequency transmission line to correct for the changing characteristic impedance of the line, an ultra high frequency attenuator designed to accomplish the above mentioned functions must be made so as to avoid any impedance mis-match between the transmission line and the attenuator itself. It will be recognized that under a desirable matching condition all energy to be transmitted in one direction is so transmitted; while in the undesirable condition of a mis-match between the coaxial transmission line and the ultra high frequency attenuator, energy which is to be transmitted in one direction is in part reflected back into the transmission line thus affecting the standing wave ratio (SWR) which in an ideal system should approximate unity. Accordingly it is one of the objects of this invention to provide new and improved resistive attenuators and more particularly a coaxial T section resistive attenuator which results in a standing wave ratio of approximately unity when suitably positioned in a concentric transmission line.

It is another object of this invention to provide an ultra frequency attenuator which may be suitably positioned in a transmission line so as to correct for changing characteristics impedance of the transmission line itself.

It is still another object of this invention to provide such an attenuator which may be positioned in a transmission line so constructed and designed as to avoid an impedance mis-match between the transmission line and the attenuator itself. It is a further object of the invention to provide a new and improved attenuator comprising a disc resistor positioned between two coaxial sections, the outer section of each having a tapered inner surface and coaxially disposed therewith inner tubular resistive sections.

It is a further object of this invention to provide a new and novel attenuator which is symmetrical in nature and when suitably positioned in a transmission line will render the impedance at its point of insertion substantially resistive in both directions.

It is a further object of this invention to provide such an attenuator which may be readily and easily manufactured, assembled, and incorporated in a coaxial transmission line.

For a more complete understanding of this invention, reference may be made to the following description taken in conjunction with the accompanying drawing. The scope of this invention

will further be pointed out in the appended claims.

Fig. 1 is a longitudinal cross sectional view of one embodiment of this invention and

Fig. 2 is a longitudinally cross sectional view of the assembled coaxial T section resistive attenuator.

This latter figure illustrates not only the novel attenuator but also conventional coupling means whereby the attenuator may be readily inserted in a concentric line.

In order to obtain a low standing wave ratio in the coaxial T attenuator itself, cognizance must first be taken to the variation in the resistance of the center conductor which in the subject attenuator forms the resistive series element. Although this series element may take various forms it is herein described as the hollow cylindrical member 6. This series arm may be thought of as a conventional film resistor in that it may be a tubular member coated on its outer surface with carbon graphite or like conductive material. For a further and more complete description of such a resistor reference is made to the copending application Serial No. 155,422.

The impedance of this coaxial configuration, although it may change throughout its length, should be essentially resistive in nature and inasmuch as the resistance of the inner tubular film resistors vary along its length in much the same manner as the resistance of the inner conductor of a coaxial transmission line may vary from Z_0 to a lower value, the impedance of the line and of the attenuator itself must also be made to vary simultaneously. To avoid any mis-match between a transmission line and the attenuator, the inner surface of the outer conductor tapers inwardly from a comparatively large diameter adjacent the coupling to the transmission line to a point adjacent the inner tubular resistor and the disc resistor which forms the shunt portion of the attenuator.

The disc resistor 8 is conventional in nature and forms a resistance path radially extending from the inner conductor or resistor 6 to the outer portion where it makes contact at the outer edge with the specially tapered outer conductor 3. In order to present minimum of discontinuity to radio frequency currents traveling through the disc, it is desirable to design the characteristic impedance of the body of the disc to match the resistance of the film or films on the disc. This may be done by control of the dielectric constant of the disc as well as by choice of dimensions of the inner and outer diameters. For a more complete description of a particular type of disc resistor reference is made to the copending application Serial No. 155,422, filed April 12, 1950.

Referring to Fig. 1, there is illustrated an ultra high frequency attenuator 1 having an outer conductor 3 whose inner surface 2 tapers inwardly to a point 4 adjacent to but spaced apart from the outer surface 5 of the hollow cylindrical film resistor 6. The inner surface 2 of the outer conductor 3 forms a throat portion at 4 which abruptly flares outwardly, forming tapered wall surface 14 from that throat portion towards one terminal portion 7 of the film resistor 6 and spaced apart from the disc resistor 8, contacting the disc resistor at the outer edge 9 of the inner surface 10. The film resistor 6 incorporates, in addition to a conducting coating 11, metallic terminal receiving end portions 7 and 12, the end portion 7 remote from the large diameter surface of the outer conductor fitting snugly into a centrally disposed aperture 13 of the disc resistor.

The inner tapered surface 2 of the outer conductor 3 performs the essential functions of matching the transmission line to the resistive attenuator 1 and prevents a mis-match within the attenuator itself. It is to be again emphasized that this tapered portion, surface 2, forms a throat at 4 which abruptly flares outwardly to the outer surface of the conductor 1. This abrupt flared surface 14 is an important feature in that not only does it prevent the short circuiting of the currents flowing in the disc resistor 8 but also prevents any discontinuity which might arise from an abrupt non-tapered configuration.

Fig. 2 illustrates a T section resistive attenuator having conventional coaxial coupling means 15 and 16 so that the attenuator may be suitably positioned in a transmission line. While the details of these coupling means are not shown, inasmuch as they are common in the art, it might be mentioned that they essentially comprise an outer conductor portion adapted to mate with the outer conductor of the connecting coaxial cable and an inner centrally disposed center conductor forming the remote ends of socket portions adapted to receive a plug connector from the coaxial transmission line. The terminal connecting means are illustrated only in outline since the specific construction forms no part of this invention.

The resistive attenuator 17 is encased in a hollow cylindrical housing 18 which housing imparts rigidity to the structure.

An important feature to notice in this embodiment is the split retainer sleeve or shim 19. This member compensates for manufacturing tolerances and accurately provides means whereby the attenuator may be accurately positioned within the tubular housing 18.

One element of the attenuator comprises the centrally positioned disc resistor 8 whose annular outer surface 20 contacts the inner surface of the retaining sleeve 19 and which incorporates a centrally disposed aperture 7 within which suitable terminal receiving means are positioned. The terminal receiving means are of particular importance in that they provide a positive support for the hollow tubular resistors 21 and 22 heretofore described in connection with Figure 2 and provide positive electrical contact with the end portions of said inner tubular resistors. The terminal receiving means comprises a longitudinally split sleeve member 23 positioned within the centrally disposed aperture 7 of the disc resistor 8 and extending outwardly from both plane surfaces 24 and 25 of the disc resistor. A split retaining ring 26, which is outwardly biased, is centrally positioned within the terminal sleeve and serves to hold the center terminal receiving means accurately and securely within the disc resistor.

The attenuator in addition comprises two outer conductor portions 27 and 28 similar in structure to tapered member 3 described in connection with Fig. 1 positioned on either side of the disc resistor and having surfaces which taper inwardly from the end portions 15 and 16 adjacent the coaxial coupling means to a point adjacent to but spaced apart from the centrally located disc resistor 8 and forming throat portions 29 and 30 at that point.

Centrally disposed within the hollow cylindrical outer conductor are two series resistive elements 21 and 22 similar in structure to the hollow cylin-

drical member 6 described in connection with Fig. 1, whose ends adjacent the coaxial coupling means make electrical contact with the central conductor 31 of the coaxial line by means of a centrally positioned terminal means connected thereto and whose other end portions are received by the terminal receiving means located within the centrally positioned disc resistor. Metallic terminals 33 of the tubular resistors fit into the sleeve terminal and retaining member or socket 32 which is supported within the outer tubular housing or casing by insulating beads 34 having a suitably disposed centrally located aperture. The sleeve plug makes electrical connection with a metallic inner conductor 31 forming a portion of the central conductor of the coaxial transmission line when inserted in such a line.

Referring again to the outer conductors 28 and 27 and their relationship to the coaxially disposed hollow cylindrical resistive inner conductors, it is again emphasized that the inner surface which is inwardly tapered towards the centrally disposed disc resistor does not make electrical contact with the outer surface 5 of the resistive elements nor with the central portion of the disc resistor. The two ends of these outer conductors remote from the coaxial cable coupling means form wall surfaces 35 and 36 which taper abruptly outwardly from the throat portions 29 and 30 to the outer surface of the outer conductor, at which point they make positive electrical contact with the outer edges of the plane surfaces 24 and 25 of the disc resistor 8.

While particular embodiments of our invention have been shown, we do not wish to be limited thereto since other modifications may be made and therefore the appended claims are intended to cover any such modifications as may fall within the true spirit and scope of this invention.

What we claim as novel and desire to secure by Letters Patent of the United States is:

1. An ultra high frequency attenuator for insertion in a coaxial transmission line comprising an outer hollow cylindrical conductor having an inner surface which tapers inwardly from one end thereof to a point adjacent the other end and forming a throat portion at said point, said inner surface forming an abruptly flared outwardly extending wall portion from said point to the other end of said outer conductor, a disc resistor having an inner and outer plane surface which inner surface contacts peripherally said abruptly flared outwardly extending wall portion of said outer conductor adjacent said throat portion and having a centrally disposed aperture, and a tubular film resistor coaxially positioned within said outer conductor and spaced apart therefrom making electrical contact at one end thereof and positioned within said aperture.

2. In an ultra high frequency attenuator for use in electrically connecting and matching sections of transmission lines having an inner conductor and a spaced apart outer conductor, the combination of an outer hollow cylindrical conductor, an inner tubular resistor coaxially disposed therein, and a disc resistor having a centrally disposed terminal receiving means, said outer conductor having an inner surface which tapers inwardly from one end thereof to a point adjacent the other end and forming a throat portion at said point, said inner surface forming an abruptly flared outwardly extending wall portion from said point to the other end of said outer conductor, said disc resistor having a plane surface contacting peripherally of said abruptly flared outwardly extending wall portion of said outer conductor adjacent said throat portion, said tubular resistor being spaced apart from said outer conductor and supported at one end thereof by and making electrical contact with said terminal receiving means.

3. In an ultra high frequency attenuator for use in electrically connecting and matching sections of a transmission line having an inner conductor and a spaced apart outer conductor, the combination comprising a hollow cylindrical casing, a centrally positioned disc resistor within said casing, outer hollow cylndrical conductors within said casing and positioned on both sides of said disc resistor, cylindrical resistors coaxially disposed within and spaced apart from said outer conductors, each of said outer conductors having an inner surface which tapers inwardly toward said disc resistor to a point adjacent said disc resistor and forming a throat portion at said point, said inner surface forming an abruptly flared outwardly extending wall portion from said point towards said disc resistor and making electrical contact peripherally therewith, each of said cylindrical resistors being supported at one end thereof by and making electrical contact with terminal receiving means centrally positioned within said disc resistor.

4. An ultra high frequency attenuator for use in a coaxial transmission line and having coaxial coupling means at remote ends thereof, comprising hollow cylindrical casing, a longitudinally split cylindrical sleeve coaxially disposed and co-extensive with said casing, a centrally positioned disc resistor within said sleeve and having axially positioned terminal receiving means a pair of outer hollow cylindrical conductor members within said sleeve, each of said members being disposed on opposite sides of said disc resistor, and each of said members having an inner surface which tapers inwardly towards said disc resistor to a point adjacent said disc resistor forming a throat portion at said point, said inner surface forming an abruptly flared outwardly extending wall portion from said point towards said disc resistor and making electrical contact peripherally therewith, a pair of tubular resistors each of which are coaxially disposed within and spaced apart from its surrounding outer conductor and being supported and making electrical contact at one end by said coaxial coupling means and at the other by said terminal receiving means.

5. In an ultra high frequency attenuator coupling device having coaxial coupling means at remote ends thereof for use in electrically connecting and matching sections of transmission line, the combination comprising a hollow cylindrical casing, a longitudinally split cylindrical sleeve coaxially disposed within said casing, a centrally positioned disc resistor within said sleeve and having a centrally located aperture, terminal receiving means located within said aperture comprising an inner split sleeve portion secured within said aperture by an outwardly biased split retaining ring, a pair of outer hollow cylindrical conductor members positioned within said sleeve, each of said members being positioned on opposite sides of said disc resistor and each having an inner surface which tapers inwardly towards said disc resistor to a point adjacent said disc resistor forming a throat portion at said point, said inner surface forming an abruptly flared outwardly extending wall portion from said point towards said disc resistor and making

electrical contact peripherally therewith, a pair of tubular resistors each of which is coaxially disposed within and spaced apart from one of said outer conductors and supported and making electrical contact at one end thereof by said coaxial coupling means and at the other end by said centrally located terminal receiving means.

RALPH M. W. JOHNSON.
JAMES W. SHAW.

REFERENCES CITED

The following references are of record in the file of this patent:

UNITED STATES PATENTS

Number	Name	Date
1,957,538	Jensen	May 8, 1934
2,468,775	Ovrebo	May 3, 1949
2,521,828	Chatterton et al.	Sept. 12, 1950