(12) INTERNATIONAL APPLICATION PUBLISHED UNDER THE PATENT COOPERATION TREATY (PCT)

(19) World Intellectual Property Organization
International Bureau

(43) International Publication Date
26 June 2014 (26.06.2014)

WIPO | PCT

(10) International Publication Number
WO 2014/096451 A1

(51) International Patent Classification:
B60K 17/36 (2006.01) *F16H 47/04* (2006.01)
F16H 37/08 (2006.01)

(21) International Application Number:
PCT/EP2013/077927

(22) International Filing Date:
23 December 2013 (23.12.2013)

(25) Filing Language: English

(26) Publication Language: English

(30) Priority Data:
1223539.6 21 December 2012 (21.12.2012) GB

(71) Applicant: **AGCO INTERNATIONAL GMBH** [CH/CH]; Victor von Bruns-Strasse 17, CH8212 Neuhausen am Rheinfall (CH).

(72) Inventor: **HEINDL, Richard**; Carl-Orff-Ring, 87616 Marktoberdorf (DE).

(74) Agent: **AGCO INTELLECTUAL PROPERTY DEPARTMENT**; Abbey Park Stoneleigh, Kenilworth Warwickshire CV8 2TQ (GB).

(81) Designated States *(unless otherwise indicated, for every kind of national protection available)*: AE, AG, AL, AM, AO, AT, AU, AZ, BA, BB, BG, BH, BN, BR, BW, BY, BZ, CA, CH, CL, CN, CO, CR, CU, CZ, DE, DK, DM, DO, DZ, EC, EE, EG, ES, FI, GB, GD, GE, GH, GM, GT, HN, HR, HU, ID, IL, IN, IR, IS, JP, KE, KG, KN, KP, KR, KZ, LA, LC, LK, LR, LS, LT, LU, LY, MA, MD, ME, MG, MK, MN, MW, MX, MY, MZ, NA, NG, NI, NO, NZ, OM, PA, PE, PG, PH, PL, PT, QA, RO, RS, RU, RW, SA, SC, SD, SE, SG, SK, SL, SM, ST, SV, SY, TH, TJ, TM, TN, TR, TT, TZ, UA, UG, US, UZ, VC, VN, ZA, ZM, ZW.

(84) Designated States *(unless otherwise indicated, for every kind of regional protection available)*: ARIPO (BW, GH, GM, KE, LR, LS, MW, MZ, NA, RW, SD, SL, SZ, TZ, UG, ZM, ZW), Eurasian (AM, AZ, BY, KG, KZ, RU, TJ, TM), European (AL, AT, BE, BG, CH, CY, CZ, DE, DK, EE, ES, FI, FR, GB, GR, HR, HU, IE, IS, IT, LT, LU, LV, MC, MK, MT, NL, NO, PL, PT, RO, RS, SE, SI, SK, SM,

[Continued on next page]

(54) Title: VEHICLE TRANSMISSION

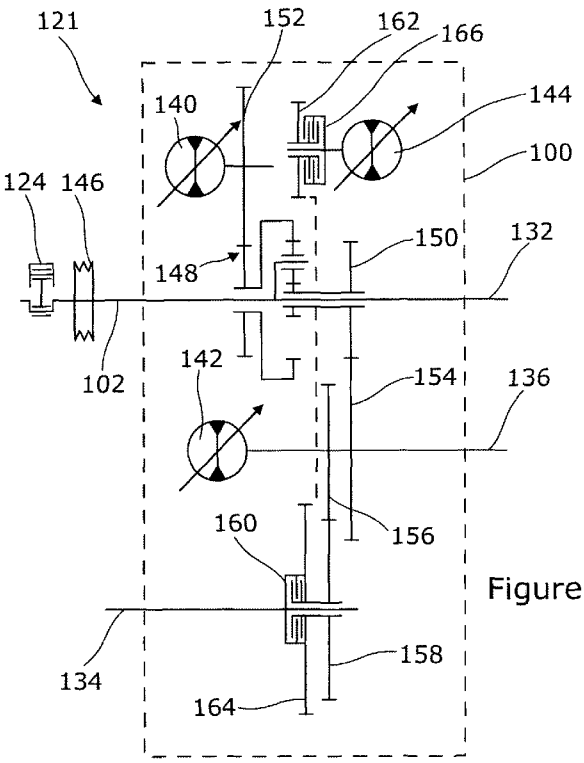

Figure 4

(57) Abstract: A continuously variable transmission for an agricultural vehicle, the transmission comprising a transmission casing and transmission components, the casing having a front wall and a rear wall, the front wall having a first aperture for receiving an input shaft and a second aperture for receiving a front axle drive shaft, the rear wall having a third aperture for receiving a first rear power take off shaft and/or a first rear axle drive shaft.

WO 2014/096451 A1

TR), OAPI (BF, BJ, CF, CG, CI, CM, GA, GN, GQ, GW, KM, ML, MR, NE, SN, TD, TG).

Published:

— *with international search report (Art. 21(3))*

VEHICLE TRANSMISSION

The present invention relates to vehicle transmissions and in particular, but not exclusively, to a transmission adaptable for use with a variety of configurations of commercial vehicles, such as trucks, construction vehicles, plant machinery and tractors.

Transmissions form part of the commercial vehicle drivelines. The purpose of the driveline is to transmit torque from the engine (most usually an internal combustion engine and/or or electric motor) to the wheels (or tracks as may be the case in some larger commercial vehicles). In addition to the engine and transmission, the driveline may also include a flywheel; one or more clutches; a transfer box; and front, centre and rear differentials.

The configuration of the driveline depends on the specific type of vehicle, for example whether the vehicle is rear wheel drive or four wheel drive, front wheel steered or centrally articulated, tracked or provided with conventional wheels and tyres. Each variation of driveline requires a different transmission layout.

Some vehicles, particularly heavy-duty agricultural, commercial and construction vehicles required to work off-road, are provided with three driven axles.

Additionally, the transmission may be required to drive front and/or rear power take off (PTO) shafts to allow the vehicle to operate ancillary equipment.

It is known to provide a driveline in which a transmission output drives a transfer box which splits the torque between the driven axles. However this has the disadvantage of requiring additional hardware (the transfer box) to provide drive to all of the wheels.

Additionally, it is well known to provide an additional gearbox which serves the sole purpose of adapting the vertical displacement of the output shaft (to which the axle is connected via a differential) relative to the input shaft. This arrangement is shown in Figure 1 in which a tractor 1 has an engine 2 providing drive to a transmission 3

which in turn has a rear PTO shaft 4 and a rear output shaft 5. The rear out put shaft 5 drives a transfer box 6 and a rear axle 7 via a rear differential 11. The transfer box 6 has a front drive shaft 8 which drives a front axle 9. It can be seen that the transfer box 6 does not form part of the transmission 3 and serves to drop the front drive shaft 8 by a vertical distance A relative to the rear output shaft 5.

Figures 2A to 2D show alternative uses of the "bolt-on" transfer box 6 to alter the relative vertical displacements of the output shafts. Figure 2A replicates part of the view of Figure 2 and once again shows the relative vertical distance A between front drive shaft 8 and the rear output shaft 5 for ease comparison with Figures 2B to 2D. Figure 2D shows the use of a second configuration of transfer box 6B which raises the height of the rear differential 11 by a distance B relative to the rear output shaft 5. Figure 2C shows use of a second transfer box 6' in front of the transmission 3 in order to raise the height of the front differential (not shown for clarity) by a distance C relative to the front drive shaft 8. Lastly, Figure 2D shows an arrangement similar to Figure 2B in which transfer box 6D raises the height of the rear differential 11 by a distance D relative to the rear output shaft 5.

It will be evident that this solution requires additional hardware to be selectively designed and installed on the vehicle, hardware which is additional to a potentially wide range of different transmissions. This increases the cost of manufacture and the maintenance requirements of the vehicle.

It is an objective of the present invention to at least mitigate one or more of the above problems.

According to the invention there is provided a transmission for a vehicle, the transmission comprising a transmission casing and transmission components,

the casing having a first aperture for receiving an input shaft and a second aperture for receiving a front axle drive shaft,

the rear wall having a third aperture for receiving and a first rear axle drive shaft and a fourth aperture for receiving a second rear axle drive shaft.

Advantageously, the invention provides a transmission which is capable of driving the three driven axles of a six-wheel drive vehicle without the requirement to attach additional hardware, for example a transfer box, to the transmission. This provides a considerable technical advantage over known transmission in that the extent of adaptation required to allow for three driven axles is minimized.

Preferably, the transmission includes a rear power take off drive shaft.

Preferably, the rear power take off drive shaft is received by the third aperture.

Preferably, the rear power take off shaft and first rear drive shaft are co-axial to oneanother.

Preferably, the transmission is a continuously variable transmission.

Preferably, the transmission further includes

a mechanical transmission branch which transfers torque mechanically from the input shaft to the axle drive shafts, and

a hydrostatic transmission branch having a hydraulic pump driven by the input shaft and at least one hydraulic motor hydraulically driven by the pump,

wherein the axle drive shafts are additionally driven by the at least one hydraulic motor so as to provide the axle drive shafts with continuously variable drive.

Preferably, the front axle drive shaft is mechanically connected to one or more of the rear axle drive shafts.

Preferably, the transmission includes a planetary gear assembly to split the torque from the input shaft between the mechanical and hydraulic transmission branches.

Further to Figures 1 to 2D (described above) which depict prior art relevant to the invention, the invention will now be described, by way of example only, and with reference to the following drawings, in which:

Figure 3 is a representation of a standard tractor including a transmission according to the present invention;

Figure 4 is a schematic representation of the driveline of the tractor of Figure 3, including a first configuration of the transmission of the present invention;

Figure 5 is a plan view of the layout of the first transmission configuration of Figure 4;

Figure 6 is an elevated rear view of the layout of the first transmission configuration of Figure 4;

Figure 7 is a rear view of the layout of the first transmission configuration of Figure 4;

Figure 8 is a schematic representation of an alternative tractor driveline including a second configuration of the transmission of the present invention;

Figure 9 is a plan view of the layout of the second transmission configuration of Figure 8;

Figure 10 is an elevated rear view of the layout of the second transmission configuration of Figure 8;

Figure 11 is a rear view of the layout of the second transmission configuration of Figure 8;

Figure 12 is a schematic representation of a third transmission configuration of the transmission of the present invention;

Figure 13 is a schematic representation of a fourth transmission configuration of the transmission of the present invention;

Figure 14 is a schematic representation of a fifth transmission configuration of the transmission of the present invention;

Figure 15 is a schematic representation of a sixth transmission configuration of the transmission of the present invention;

Figure 16 is a schematic representation of a seventh transmission configuration of the transmission of the present invention;

Figure 17 is a schematic rear view of the transmission of the present invention;

Figure 18 is a schematic front view of the transmission of the present invention; and

Figure 19 is a schematic side view of the transmission of the present invention.

Figure 3 shows an agricultural vehicle, in the form of a tractor 110, having front wheels 112, rear wheels 114, an engine cover 116 and operator cab 118. The tractor 110 has a chassis 120 (not shown in Figure 3 for clarity) and provides support for the tractor and a driveline 121 which provides propulsive drive. In some tractors the driveline may form part of the chassis, for example where the outer casing of a transmission and a rear transaxle is structurally integral to the chassis.

Figure 4 shows the driveline 121 having a prime mover in the form of an internal combustion engine 124 and a first configuration of transmission 100 (indicated schematically in Figure 4 by dotted line 100). The transmission 100 has an inner transmission casing 199 (not shown in Figure 4) which is mounted inside an outer structural housing (not shown) which forms part of the chassis. Accordingly, the transmission 100, specifically the casing 199, supports or houses all of the components required to provide the full transmission output power with variable torque, variable vehicle speed and variable driving direction over a full range of vehicle speeds.

It will be appreciated that whilst the example of prime mover given is that of an internal combustion engine, it is conceivable within the scope of the invention that the prime mover could be an electric motor or other form of propulsive engine.

The configuration of the tractor 110 shown in Figures 3 to 7 is a four wheel drive tractor with steered front wheels. Alternatively, the tractor may be rear wheel drive only in which case the driveline 121 would not include a front differential assembly while the transmission 100 would be otherwise unchanged.

The engine 124 provides drive to the transmission 100 via a flywheel 146. The transmission 100 drives the front and rear axle drive shafts 134,136 to provide propulsive drive to the wheels 112, 114. In addition to providing propulsive drive, the transmission 100 also provides drive to a rear power take-off drive shaft 132.

The engine 124 is connected to an input shaft 102 of the transmission 100 via the flywheel 146. The input shaft 102 is connected at its inboard end to a planetary gear assembly indicated generally 148. The purpose of the planetary gear assembly 148 is to split the torque provided by the input shaft 102 between a mechanical branch indicated generally at 150 and a hydrostatic branch indicated generally at 152. On the opposite side of the planetary gear assembly to the input shaft 102 is a rear power take off shaft 132.

The hydrostatic branch 152 drives a hydraulic pump 140. The mechanical branch 150 is connected to a front axle drive shaft 134 and a rear axle drive shaft 136 as follows. Torque is transmitted from the mechanical branch 150 of the planetary gear assembly 148 to the rear axle drive shaft 136 via a rear axle gear 154. Mounted on the same shaft as the rear axle drive gear 154 is an intermediary gear 156 which in turn drives a front axle drive gear 158 which selectively drives the front axle drive shaft 134. A clutch 160 is provided to selectively engage and disengage the front axle drive shaft 134 from the rear axle drive shaft 136 or to control the ratio of torque distribution between the two axles. This allows grip to be optimised dependant on the ground conditions.

In addition to the mechanical drive path described above, the hydraulic pump 140 is hydraulically connected (not shown in Figure 4 for clarity) to a first hydraulic motor 142 which is driveably connected to the rear axle drive shaft 136 in order to provide hydraulic drive to the rear wheels. The hydraulic pump 140 is also connected to a second hydraulic motor 144 in order to provide hydraulic drive to the front axle drive

shaft 134 as follows. The motor 144 is driveably connected to the front axle drive shaft 134 via first and second hydraulic motor gears 162, 164. A clutch 166 allows the second hydraulic motor 144 to be selectively engaged and disengaged from the front axle drive shaft 134. This allows hydraulic drive to be provided to the front axle drive shaft 134 by the second hydraulic motor 144 in addition to, or alternatively to, the drive delivered to the front axle drive shaft 134 from the rear axle drive shaft 136 via the intermediary and front axle drive gears 156, 158, depending on the extent of engagement of the clutch 160.

Second hydraulic motor 144 is connected to front axle drive shaft 134 by gears 162, 164 having a high transmission ratio. This allows motor 142 to provide high torque at a limited, lower range of vehicle speeds. Consequently, at higher vehicle speeds, the motor 144 may be disconnected from driveline 121 via clutch 166. Due to the layout, the first hydraulic motor 144 is provided for delivering lower torque but over the full range of vehicle speeds. However, in combination, both motors 142, 144 enable the transmission to provide a full transmission output power with variable torque, variable vehicle speed and variable driving direction over a full range of vehicle speeds.

The rear axle drive shaft 136 provides drive to the rear wheels 114. Similarly, the front axle drive shaft 134 provides drive to the front wheels 112.

By way of further explanation, various drive configurations are possible depending on the operating positions of clutches 160 and 166:

With the clutch 160 disengaged, and the clutch 166 engaged, motor 142 drives the rear axle drive shaft 136 and thereby rear axle 114, and motor 144 drives the front axle drive shaft 134 and thereby front axle 112.

With the clutch 160 disengaged, and the clutch 166 disengaged, motor 142 drives the rear axle drive shaft 136 and thereby rear axle 114. The front axle drive shaft 134 and thereby front axle 112 is not driven.

With the clutch 160 engaged, and the clutch 166 disengaged, motor 142 drives the rear axle drive shaft 136 and thereby rear axle 114. The motor 142 also drives the front axle drive shaft 134 and thereby front axle 112.

With the clutch 160 engaged, and the clutch 166 engaged, motor 142 and motor 144 both drive the rear axle drive shaft 136 and thereby rear axle 114. The motors 142, 144 also drive the front axle drive shaft 134 and thereby front axle 112.

With the clutch 160 variably controlled, and the clutch 166 engaged, torque supplied by motor 142 to the front axle drive shaft 134 and thereby front axle 112 can be adapted.

Referring now to Figures 5, 6 and 7, the input shaft 102, rear power take-off drive shaft 132, front axle drive shaft 134 and a rear axle drive shaft 136 are visible at the exterior of the an inner transmission casing 199. The transmission 100 has a blanking cap 138 which covers an aperture in the inner transmission casing 199 for an additional drive shaft not used in this first configuration of transmission. In addition, the hydraulic pump 140, first hydraulic motor 142 and second hydraulic motor 144 are shown mounted to the inner transmission casing 199.

In use, the operator is able to vary the division of torque provided by the transmission 100 either mechanically or hydraulically by varying the amount of hydraulic assistance provided by the first and second hydraulic motors.

The transmission of the present invention is also suitable for a tracked tractor as will now be described in further detail.

Figure 8 shows the driveline 221 for a tracked tractor having an engine 224 which drives a second configuration of transmission 200 which in turn provides drive to a rear axle drive shaft 236. The rear axle drive shaft 236 provides drive to the rear drive wheels (not shown) which in turn drive the track (not shown). As a result there is no requirement for a front axle drive shaft since no drive is transmitted to the front wheels.

The engine 224 provides drive to the transmission 200 via a flywheel 246. In addition to providing propulsive drive to the rear axle drive shaft 236, the transmission 200 also provides drive to a rear power take-off drive shaft 232. The engine 224 is connected to the input shaft 202 of transmission 200 via the flywheel 246. The input shaft 202 is connected at its inboard end to a planetary gear assembly indicated generally 248. The purpose of the planetary gear assembly 248 is to split the torque provided by the input shaft 202 between a mechanical branch indicated generally at 250 and a hydrostatic branch indicated generally at 252. On the opposite side of the planetary gear assembly 248 to the input shaft 202 is the rear PTO drive shaft 232.

The hydrostatic branch 252 drives first and second hydraulic motors 242, 244 via hydraulic pump 240 while the mechanical branch 250 provides drive to the rear axle drive shafts 236 as follows. Torque is transmitted from the mechanical branch 250 of the planetary gear assembly 248 to the rear axle drive shaft 236 via initial gear 254. Mounted on the same shaft as the initial gear 254 is an intermediary gear 256 which in turn drives a rear axle drive gear 258. The rear axle drive gear 258 is mounted on and thereby drives the rear axle drive shaft 236. A steering differential (not shown) is provided to split the torque delivered by the rear axle drive shaft 236 between the left and right rear drive wheels in order to steer the tractor 210.

In addition to the mechanical drive path described above, the hydraulic pump 240 is hydraulically connected (not shown in Figure 5 for clarity) to the first hydraulic motor 242 which is driveably connected to the rear axle drive shaft 236 via the intermediary gear 256 and rear axle drive gear 258 in order to provide supplementary hydraulic drive to the rear drive wheels 212. The hydraulic pump 240 is also connected to the second hydraulic motor 244 which is driveably connected to the rear axle drive shaft 236 via second hydraulic motor gear 264. A clutch 266 allows the second hydraulic motor 244 to be selectively engaged and disengaged from the rear axle drive shaft 236. This allows hydraulic drive to be provided to the rear axle drive shaft 236 by the second hydraulic motor 244 in addition to, or alternatively to, the drive delivered by the first hydraulic motor 242 and the mechanical branch 250 of the planetary gear assembly 248.

Referring now to Figures 9, 10 and 11 the input shaft 202, rear power take-off drive shaft 232, and rear axle drive shaft 236 are visible at the exterior of the inner transmission casing 299. It will be noted that the transmission 200 does not have the blanking cap 138 of the transmission 100. Instead the transmission 200 uses the aperture covered by the blanking cap 138 in transmission 100 to provide access for the rear axle drive shaft 236. Also the transmission 200 has no front axle drive shaft as the tracked tractor 210 requires no drive to the front wheels. Furthermore, the transmission 200 is not provided with clutch 166 of transmission 100 as there is no need for torque distribution.

In addition, the hydraulic pump 240, and the first and second hydraulic motors 242, 244 are shown mounted to the inner transmission casing 299.

It will be appreciated that the transmission of the present invention can be configured to provide a configuration of transmission 100 for tractor 110 or transmission 200 for tractor 210 wherein the drive shafts 136, 134, 236 can be positioned at a different vertical distance to e.g. the input shaft 202. Furthermore the drive shafts 136, 134, 236 are positioned at the appropriate vertical shaft level and provided with the respective transmission ratio/output speed to meet the requirements of different wheel sizes over different vehicles. Drive shaft 136 is provided with the respective gear ratio suitable to drive a big size rear wheel of a standard tractor. Drive shaft 134 is provided with the respective gear ratio suitable to drive a smaller rear wheel of a standard tractor. Drive shafts 136 is provided with the respective gear ratio suitable to drive a mid size drive wheel to drive the track of a track-type tractor. This design eliminates the requirement for transfer boxes when used in different vehicle types.

In each configuration, the inner transmission casing 199, 299 and many of the internal components remain the same. This provides significant advantages, for example a reduction in the complexity of production of the transmissions across a range of tractors typically offered by agricultural manufacturers.

The transmission unit 26 can provide further configurations of transmission to suit a large range of applications. Further alternative transmission configurations of transmission will now be described with reference to Figures 12 to 19. Each

transmission is similar in construction and operation to transmissions 100, 200 described above and all provide at least two continuously variable output drive shafts. The modes of operation of each of the transmissions of Figures 12 to 19 will only be described in detail where they differ significantly from transmissions 100, 200 described above.

Referring initially to Figure 12, a configuration of transmission 400 has an input shaft 402 which drives a planetary gear system 448 with a mechanical branch 450 and a hydraulic branch 452. The hydraulic branch 450 drives a hydraulic pump 440 which provides hydraulic power to a hydraulic motor 442. The input shaft 402 passes through the planetary gear system 448 and exits the transmission at the rear as a rear PTO drive shaft 432. The rear PTO drive shaft 432 is co-axial with, and positioned diametrically within, a rear axle drive shaft 436. A front axle drive shaft 434 is driven by the hydraulic motor 442 and the mechanical branch 450 via gears 474, 476. The hydraulic motor 442 is also able to power the rear axle drive shaft 436 via gears 474, 476.

Figure 14 shows a further configuration of transmission 500. The transmission 500 has an input shaft 502, front axle drive shaft 534, rear axle drive shaft 536, gears 574, 576, hydraulic pump 540 and hydraulic motor 542 in common with transmission 400. Compared to the transmission 400 shown in Figure 12, no PTO shaft is provided as the hollow shaft extending to the rear of the planetary gear system 548 is connected to the rear axle drive shaft 536. This arrangement may be suitable for a truck not requiring a rear PTO. As trucks require a transmission with a lower output speed to better fit to the rest of the driveline, the planetary gear system 548' may be adapted so that the rear axle drive shaft 536 is drivingly connected to a component of the planetary gear system 548' which rotates with lower speed.

The transmission 600 of Figure 14 differs from transmission 400 (with identical components being numbered 200 higher in Figure 14 than in Figure 12) in that it has a second hydraulic motor 644 which acts in cooperation with the first hydraulic motor 642 to drive the front axle drive shaft 634 and rear axle drive shaft 636. The second motor 644 could also be provided in the embodiments shown in Figure 12 and 13.

Referring now to Figure 15, the transmission 700 has an input shaft 702 driving a planetary gear system 748 with a mechanical branch 750 and a hydraulic branch 752. The hydraulic branch 752 drives a hydraulic pump 740 which provides hydraulic power to first and second hydraulic motors 742, 744. The input shaft 702 passes through the planetary gear system 748 and exits the transmission at the rear as a rear PTO drive shaft 732. The rear PTO drive shaft 432 is co-axial with, and positioned diametrically within, a first rear drive shaft 736. A second rear drive shaft 790 is driven by the first hydraulic motor 742 and the mechanical branch 750 via gears 774, 776. The first hydraulic motor 742 is also able to power the first rear drive shaft 736 via gears 774, 776. A front axle drive shaft 734 is driven by the first hydraulic motor 742 and mechanical branch 750 of the planetary gear system 748 via gears 792, 794 and clutch 796. Attached to the other end of the front axle drive shaft 734 is a third rear drive shaft 798. The front axle drive shaft 734 and third rear drive shaft 798 are selectively driven by the second hydraulic motor 744 via clutch and gears 795, 797. In such a manner the clutch 766 can be engaged to enable the second hydraulic motor 744 to drive the first and second rear drive shafts 736, 790 via the gears 795, 797, 794, 792, 776 and 774. The clutch 796 can be engaged to mechanical drive and hydraulic drive to the front axle drive shaft 734 and third rear drive shaft 798. As the clutch 796 is summing up the torque delivered by motors 742 and 744 via circumferential toothed portions, the front axle drive shaft 734 can extend through clutch 796 to provide third rear drive shaft 798.

The configuration of transmission 700 may be used to drive a vehicle with more than two driven axles as follows.

In a vehicle with three axles, the front axle of the vehicle may be connected to front axle drive shaft 734, a mid vehicle axle may be connected to third rear drive shaft 798 while the rear vehicle axle may be connected to second rear drive shaft 790. In addition, rear PTO drive shaft 432 may drive a PTO.

In a vehicle with four axles, the front (first) axle of the vehicle may be connected to front axle drive shaft 734, a mid (second) vehicle axle may be connected to third rear drive shaft 798 while the first rear (third) vehicle axle may be connected to first rear

drive shaft 736. In addition, the second rear (fourth) vehicle axle may be connected to first rear drive shaft 736. The rear PTO drive shaft 432 would not be used in this case.

The transmission 800 of Figure 16 differs from transmission 700 (with identical components being numbered 100 higher in Figure 16 than in Figure 15) in that second hydraulic motor 844 is positioned in line with the front axle drive shaft 834 in order to selectively (via clutches 866 and 896) drive the front axle drive shaft 834 and rear drive shafts 836, 890. The second hydraulic motor 844 is shown in an alternative location 844" by dashed lines in Figure 16 in which embodiment the front axle drive shaft 834 is removed in order to provide access for the motor 844" and a third rear drive shaft 898 is provided instead.

In Figure 17, the rear wall of the transmission unit 26 is depicted showing the shaft positions of configurations of transmission 100, 200, 400, 500, 600, 700 and 800. Figures 18 and 19 show the shaft positions in front wall and side walls, respectively.

The input shaft 102, 202, 402, 502, 602, 702, 802 enters the transmission unit 26 through aperture A1. The rear PTO drive shaft 132, 232, 432, 632, 732, 832 is positioned coaxially within the rear axle drive shaft 436, 536, 636, 736, 836 at position A exiting the transmission unit through aperture A3. Alternatively (or additionally in the case of transmissions 700, 800) the rear axle drive shaft 136, 790, 890 is provided at an intermediate position B exiting the transmission unit through aperture A4. In transmissions 400, 500 and 600 the front axle drive shaft 434, 534, 634 exits the front of the transmission casing at position B through aperture A6. Alternatively (or additionally in the case of transmissions 700, 800) the rear axle drive shaft 236, 798, 898 is provided at a low position C exiting the transmission unit through aperture A5. Alternatively (or additionally in the case of transmissions 700) the front axle drive shaft 134, 734, 834 exits the front of the transmission casing at position C through aperture A2.

Accordingly, the configurations of transmission described above provide the full transmission output power with variable torque, variable vehicle speed and variable driving direction over a full range of vehicle speeds. This is in contrast to prior art transmissions (see Figures 1 and 2A to 2D) in which only a single drive shaft is

provided which can achieve a continuously variable torque delivery across the range of vehicle speeds. Rather, in the prior art devices (depicted in Figures 1 and 2A to 2D) a supplementary transfer box 6 must be provided in order to split the drive from the single output shaft 5 to the front and rear axles.

The transmission of the present invention therefore achieves considerable space saving and a reduction in mechanical components over the prior art transmissions as the requirement for a separate transfer box is eliminated by the provision of two continuously variable output shafts, one for providing drive to the rear wheels the other for providing drive to the front wheels.

The embodiments of transmission described above all have a hydrostatic branch defined by a pump (driven by the input shaft) and two motors which are driven by the pump.

In an alternative embodiment the hydrostatic branch is replaced by an electrical branch in which the hydraulic pump is replaced by an electrical generator (driven by the input shaft) and the hydraulic motors are replaced by electric motors.

In the specific embodiments the transmission unit 26 is surrounded by an additional structural housing integral with the chassis of the tractor. This is especially advantageous for assembly and maintenance reasons.

Alternatively, and without departing from the scope of the invention, the transmission unit 26 could incorporate the structural housing in place of the inner transmission casing 199. In this case, all the components included in each configuration of the transmission unit 26 described above would be directly assembled to the structural housing.

Furthermore, the embodiments described above are based on an orientation of the transmission which is common in agricultural vehicles such as tractors, that is to say that the engine is at the front and the transmission is positioned rearwards of the engine relative to the driving direction. This results in the front axle being situated in front of the transmission while the rear axle is behind the transmission. However it is

conceivable that the orientation of the transmission or the engine could be altered, e.g. for bucket loaders having a rear engine, would result in a different orientation of the vehicle front and rear axle(s) in relation to the transmission. So the reference of to front or rear axle must be more seen with reference to the transmission than strictly to the vehicle.

CLAIMS

1. A transmission for a vehicle, the transmission comprising a transmission casing and transmission components,

the casing having a first aperture for receiving an input shaft and a second aperture for receiving a front axle drive shaft,

the rear wall having a third aperture for receiving and a first rear axle drive shaft and a fourth aperture for receiving a second rear axle drive shaft.

2. The transmission of claim 1 wherein the transmission includes a rear power take off drive shaft.

3. The transmission of claim 2 wherein the rear power take off drive shaft is received by the third aperture.

4. The transmission of claim 3 wherein the rear power take off shaft and first rear drive shaft are co-axial to one another.

5. The transmission of any preceding claim wherein the transmission is a continuously variable transmission.

6. The transmission of claim 5 wherein the transmission further includes a mechanical transmission branch which transfers torque mechanically from the input shaft to the axle drive shafts, and

a hydrostatic transmission branch having a hydraulic pump driven by the input shaft and at least one hydraulic motor hydraulically driven by the pump,

wherein the axle drive shafts are additionally driven by the at least one hydraulic motor so as to provide the axle drive shafts with continuously variable drive.

7. The transmission of claim 6 wherein the front axle drive shaft is mechanically connected to one or more of the rear axle drive shafts.

8. The transmission of claim 6 or 7 wherein the transmission includes a planetary gear assembly to split the torque from the input shaft between the mechanical and hydraulic transmission branches.

5

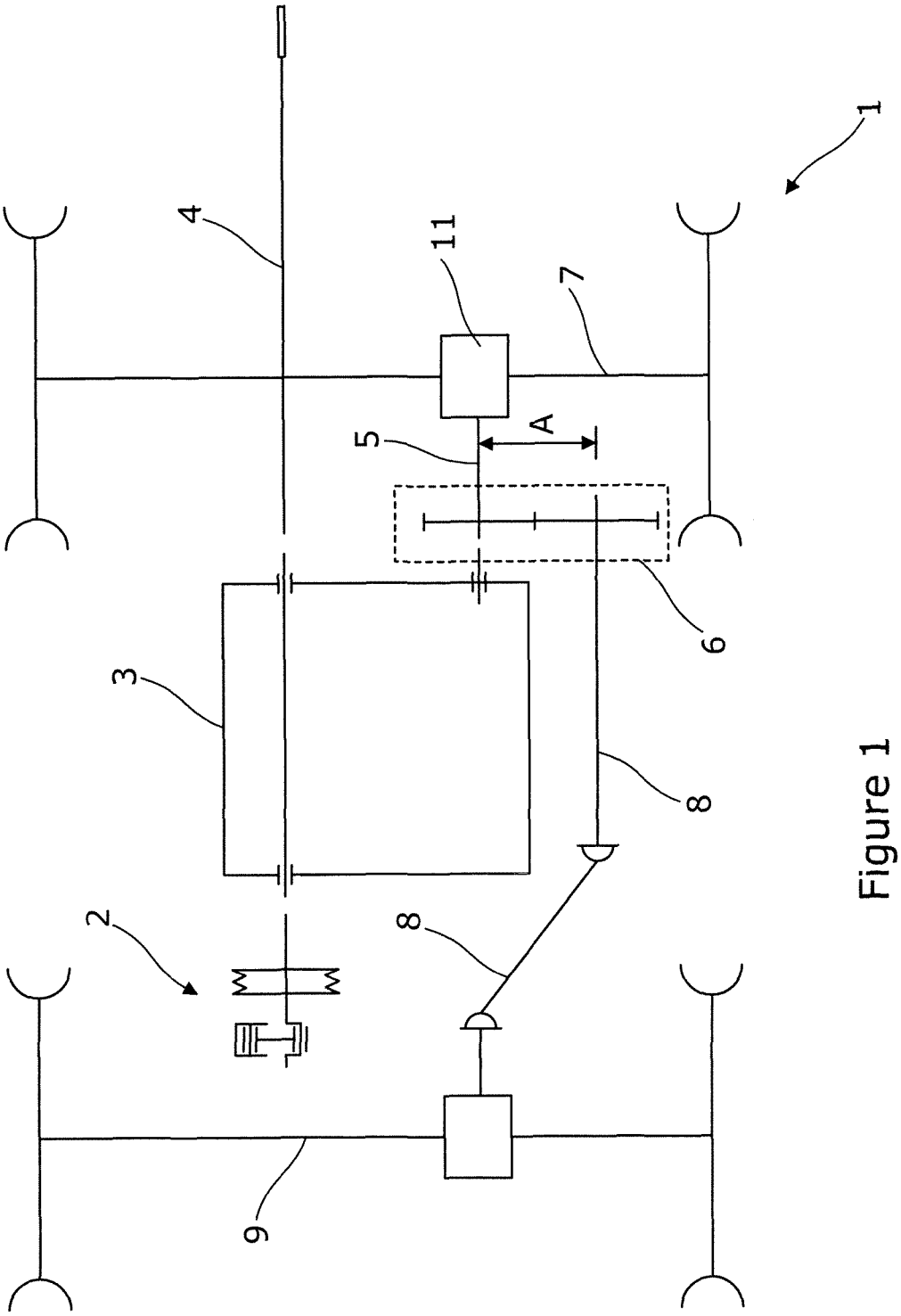

Figure 1
(Prior Art)

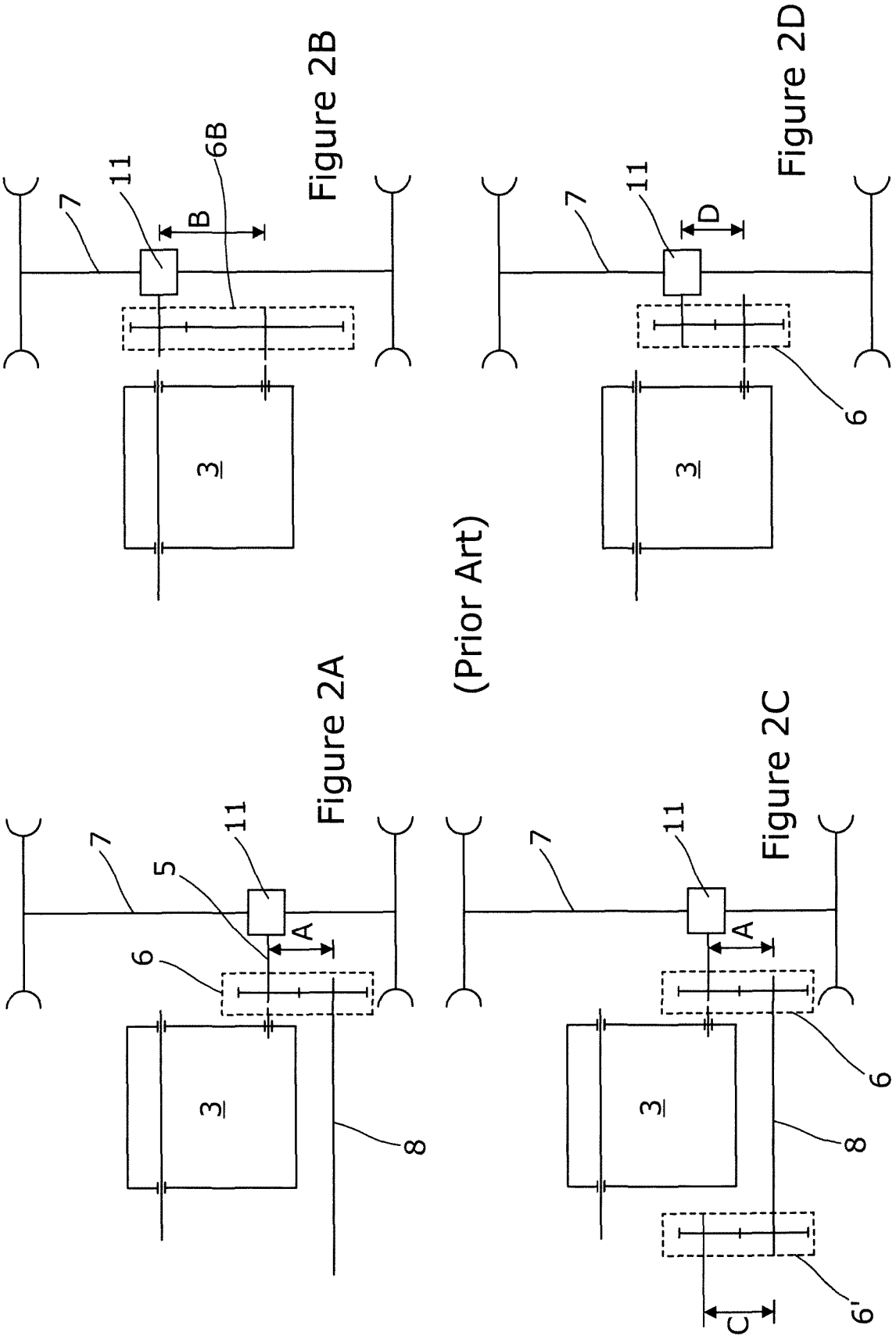
Figure 2B
11
6B
7
B
3
Figure 2D
11
7
D
6'
3
(Prior Art)
Figure 2A
11
7
5
A
6
3
8
Figure 2C
11
7
A
6
3
8
C
6'

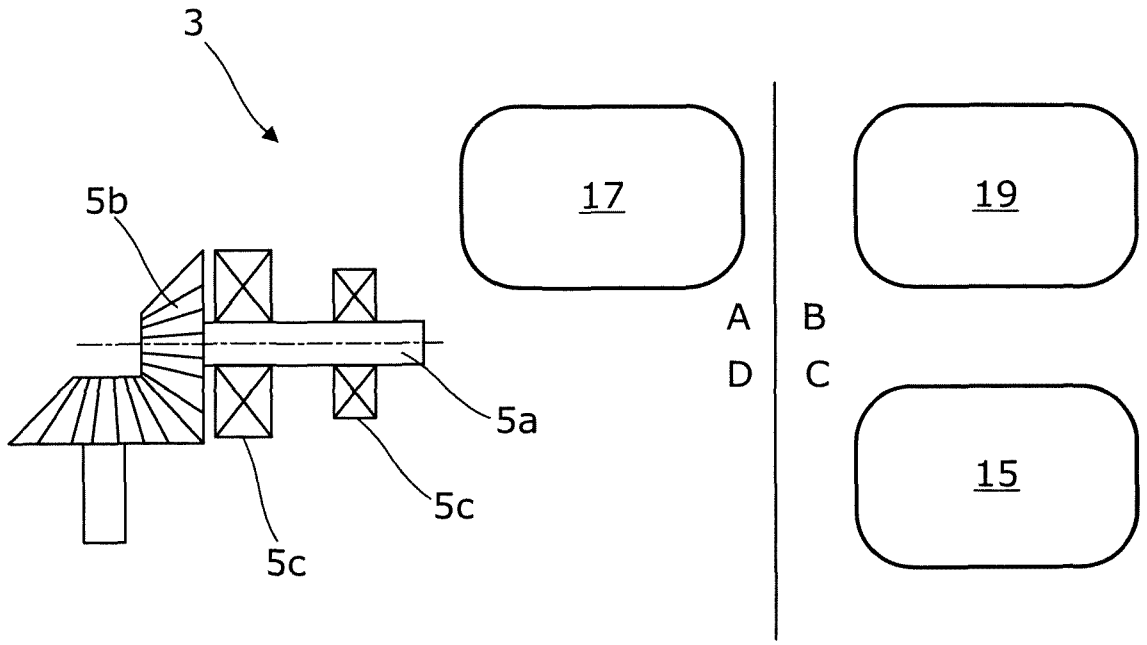

Figure 2E

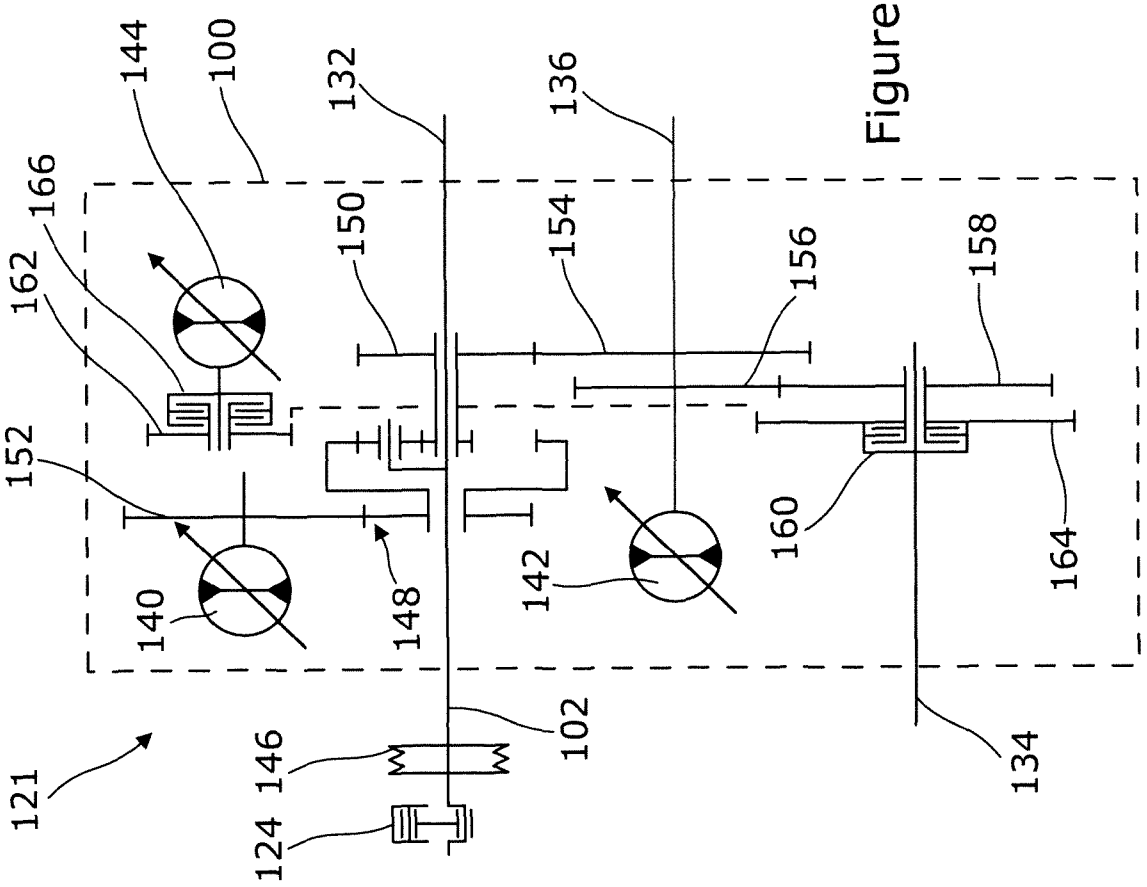

Figure 4

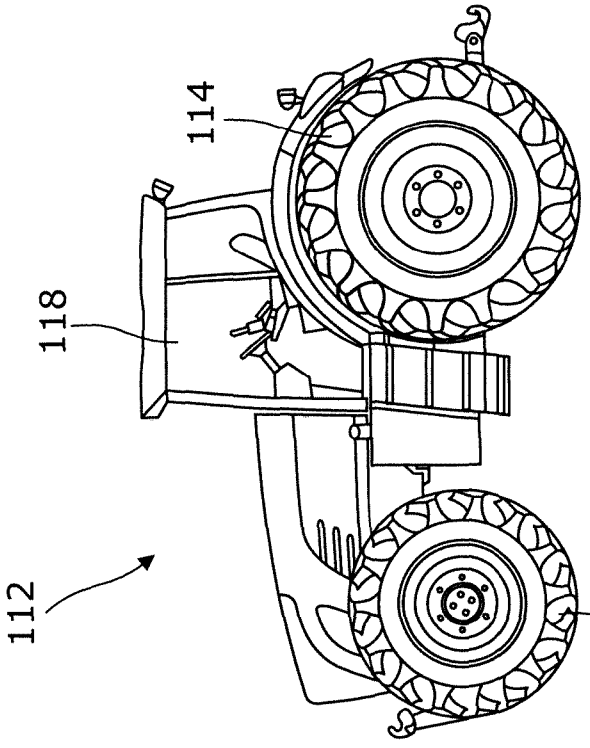

Figure 3

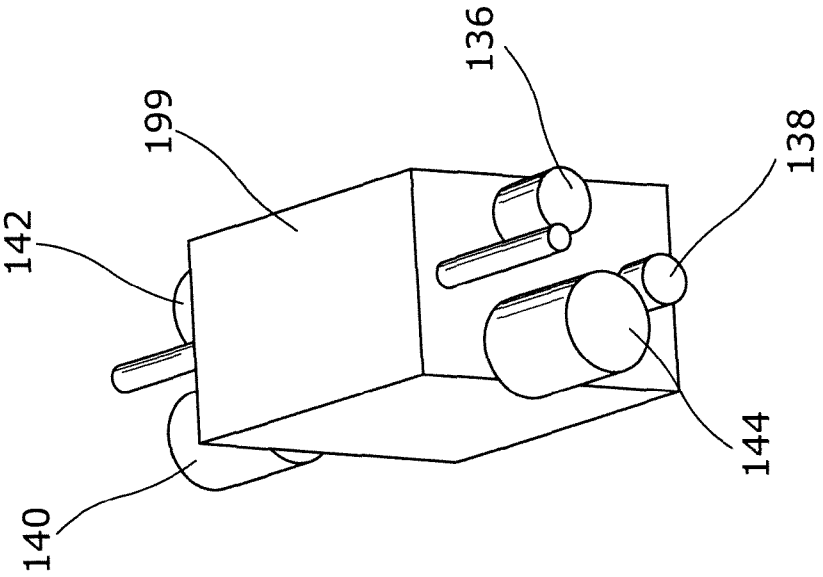

Figure 6

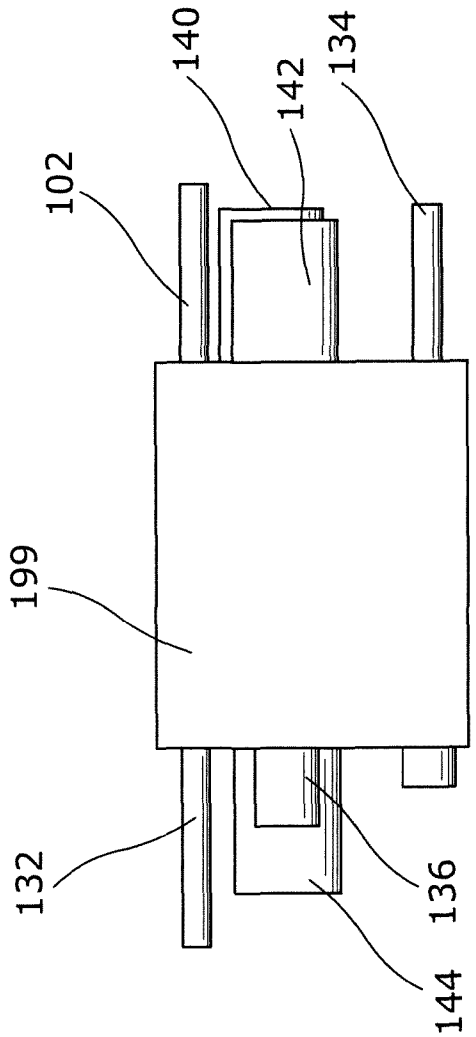

Figure 5

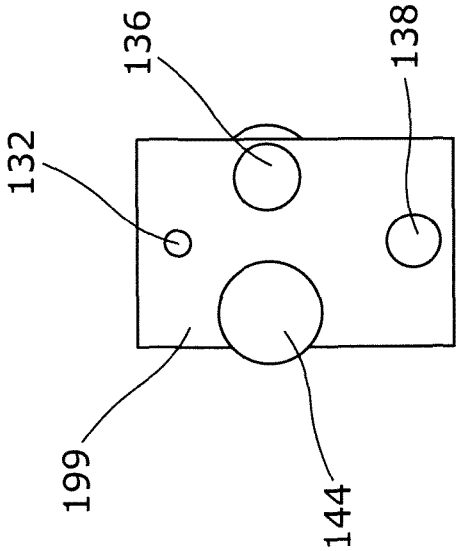

Figure 7

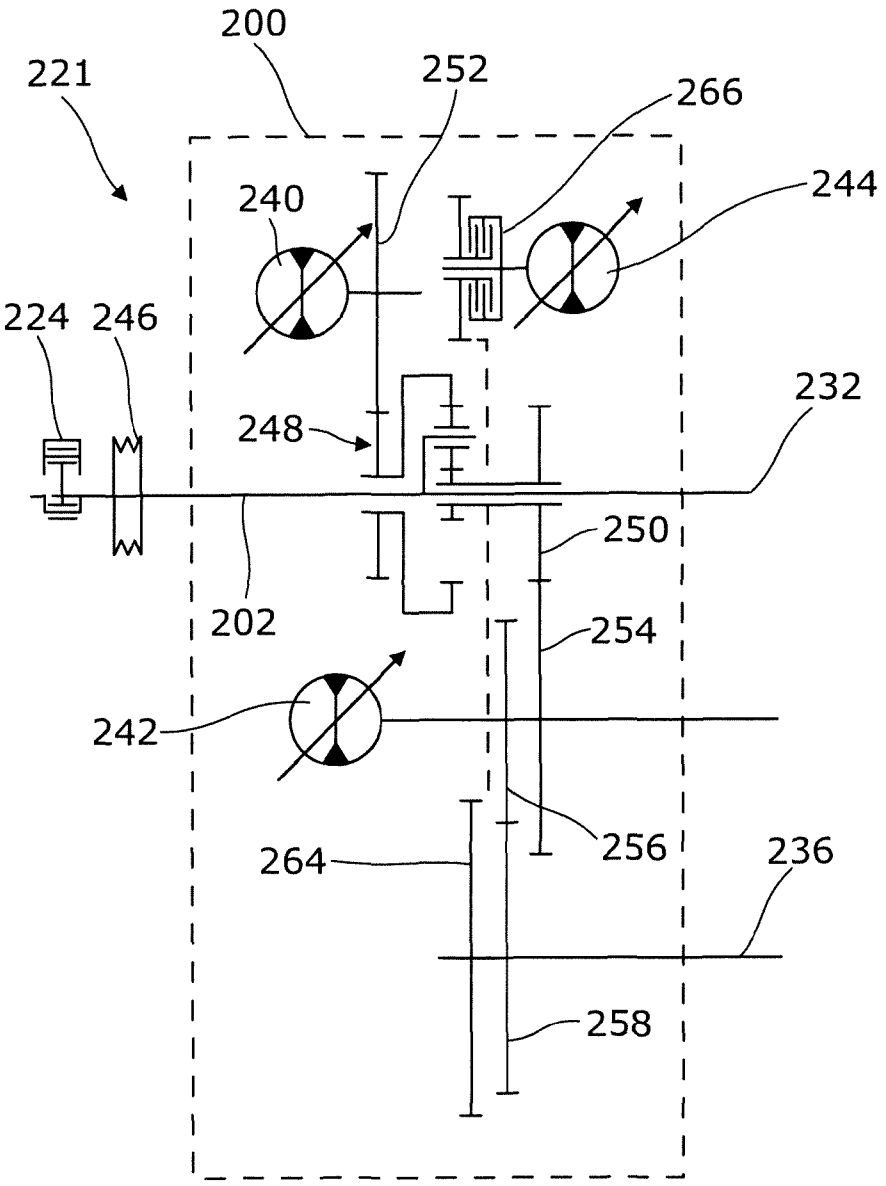
200
221
252
266
240
244
224
246
232
248
250
202
254
242
256
264
236
258

Figure 8

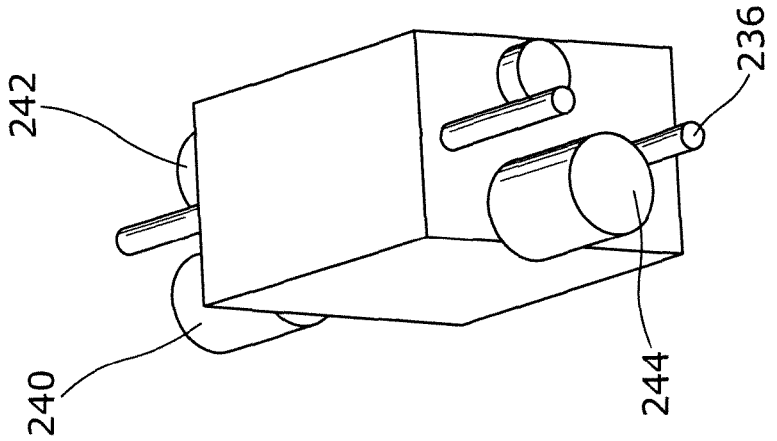

Figure 10

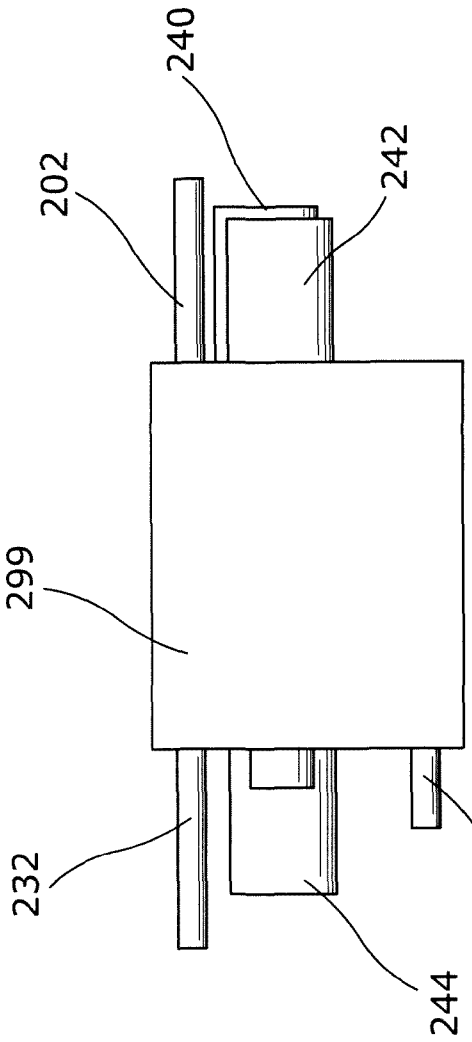

Figure 9

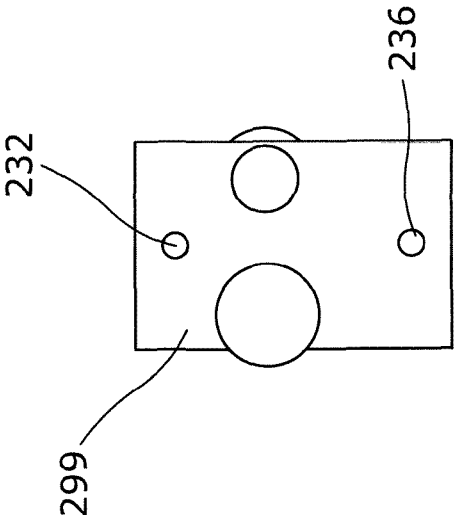

Figure 11

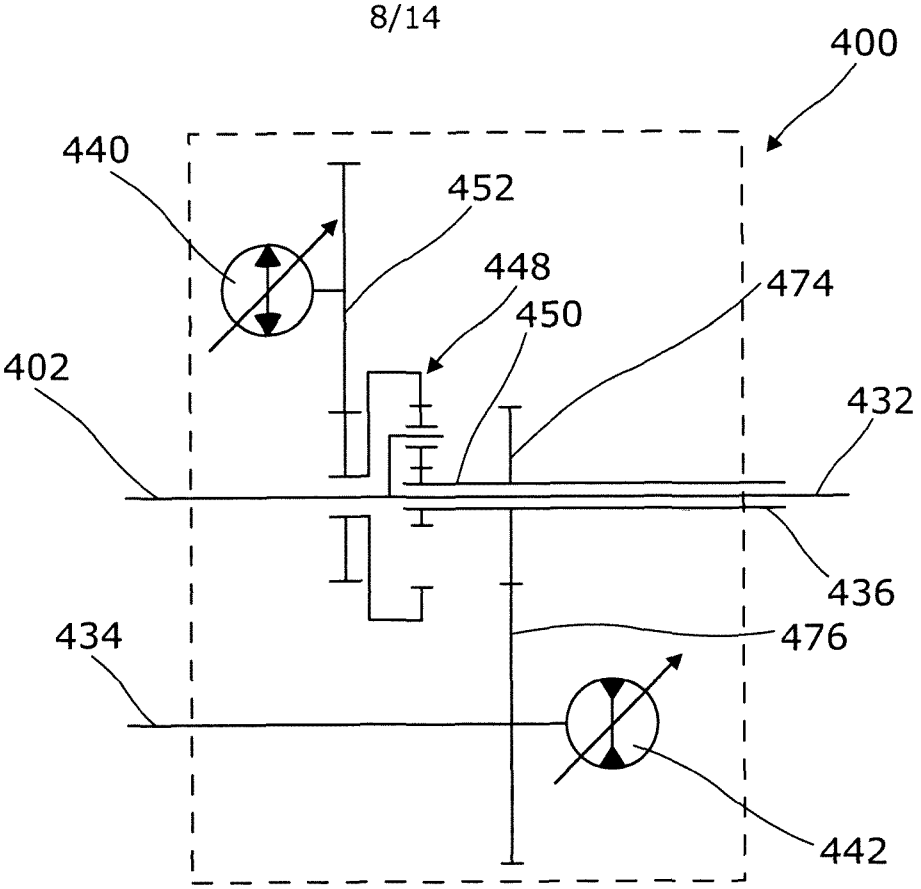

Figure 12

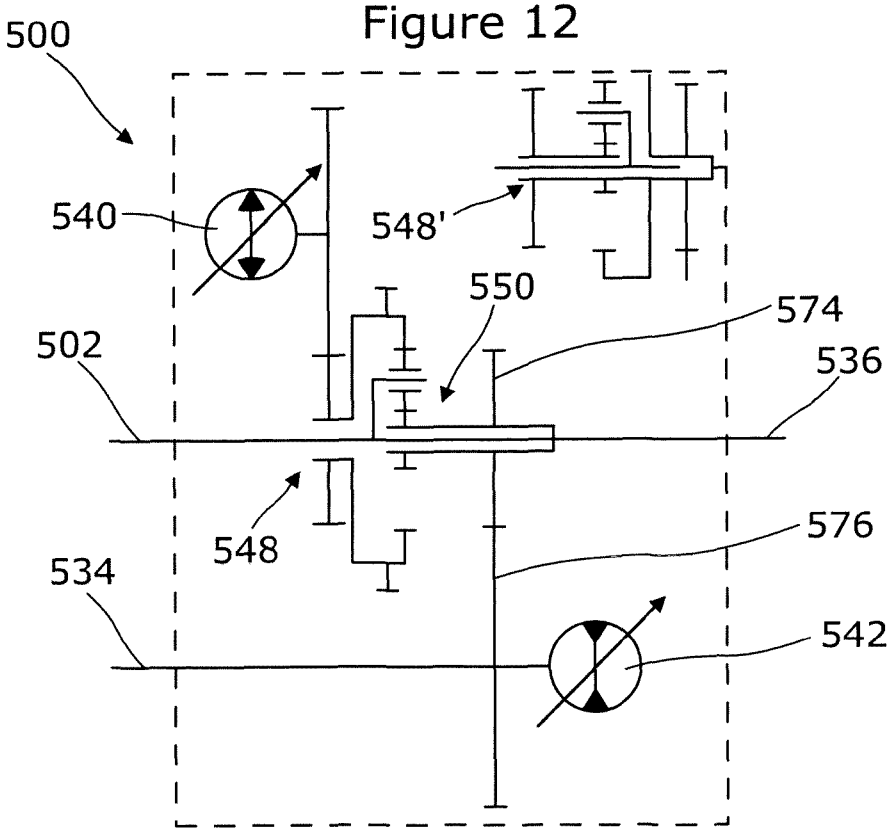

Figure 13

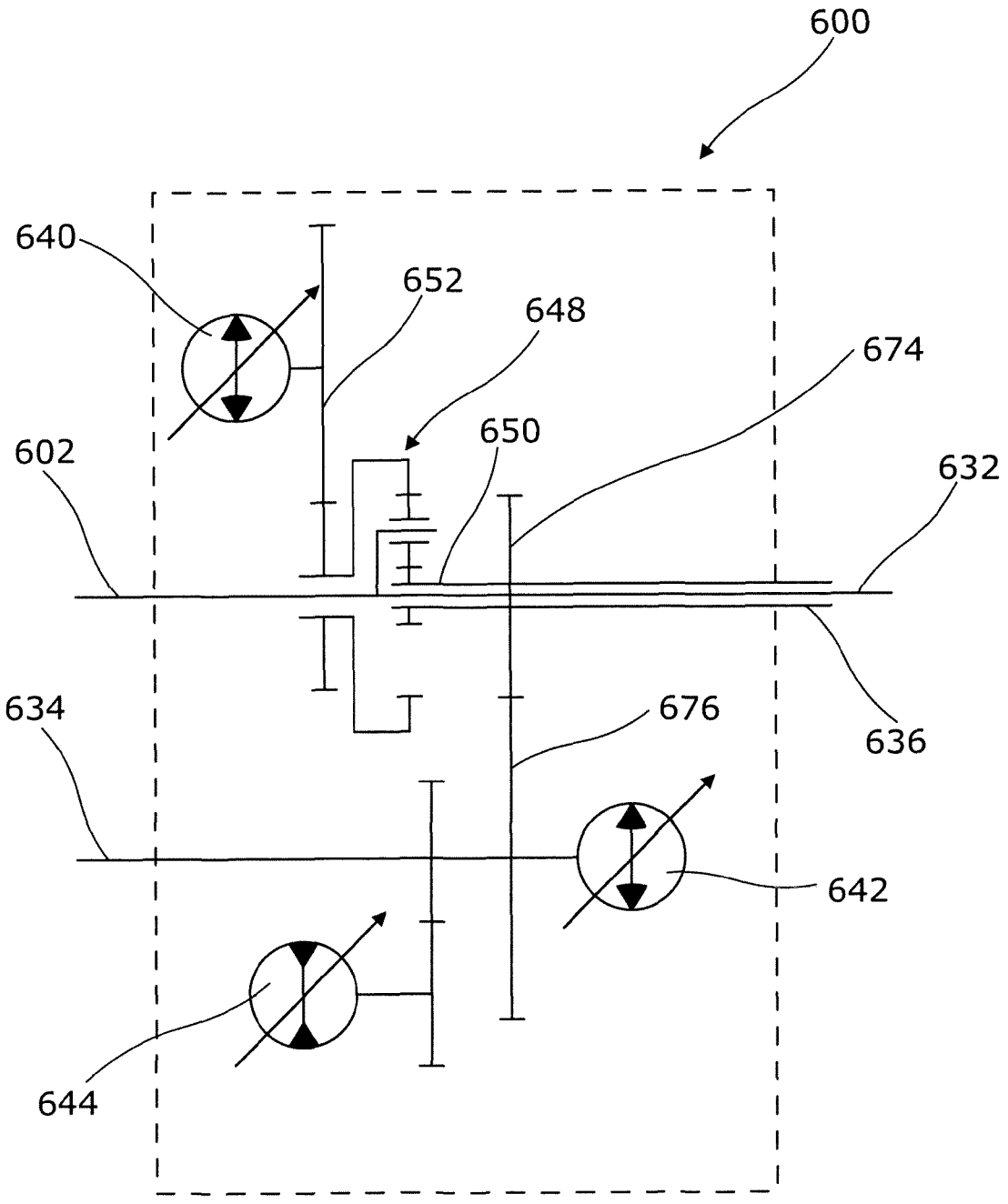

Figure 14

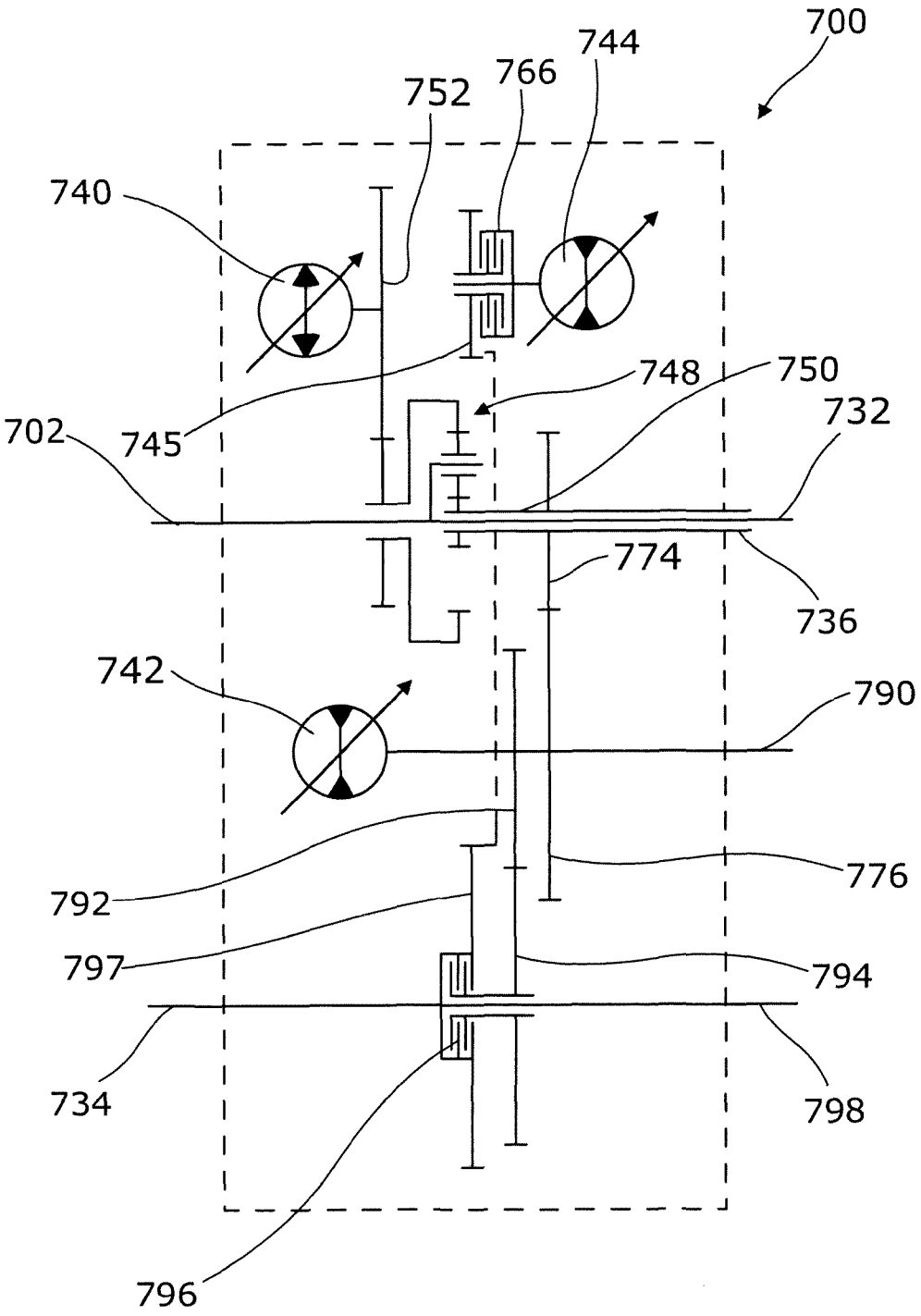
700
744
766
752
740
748
750
732
702
745
774
736
742
790
776
792
797
794
734
798
796

Figure 15

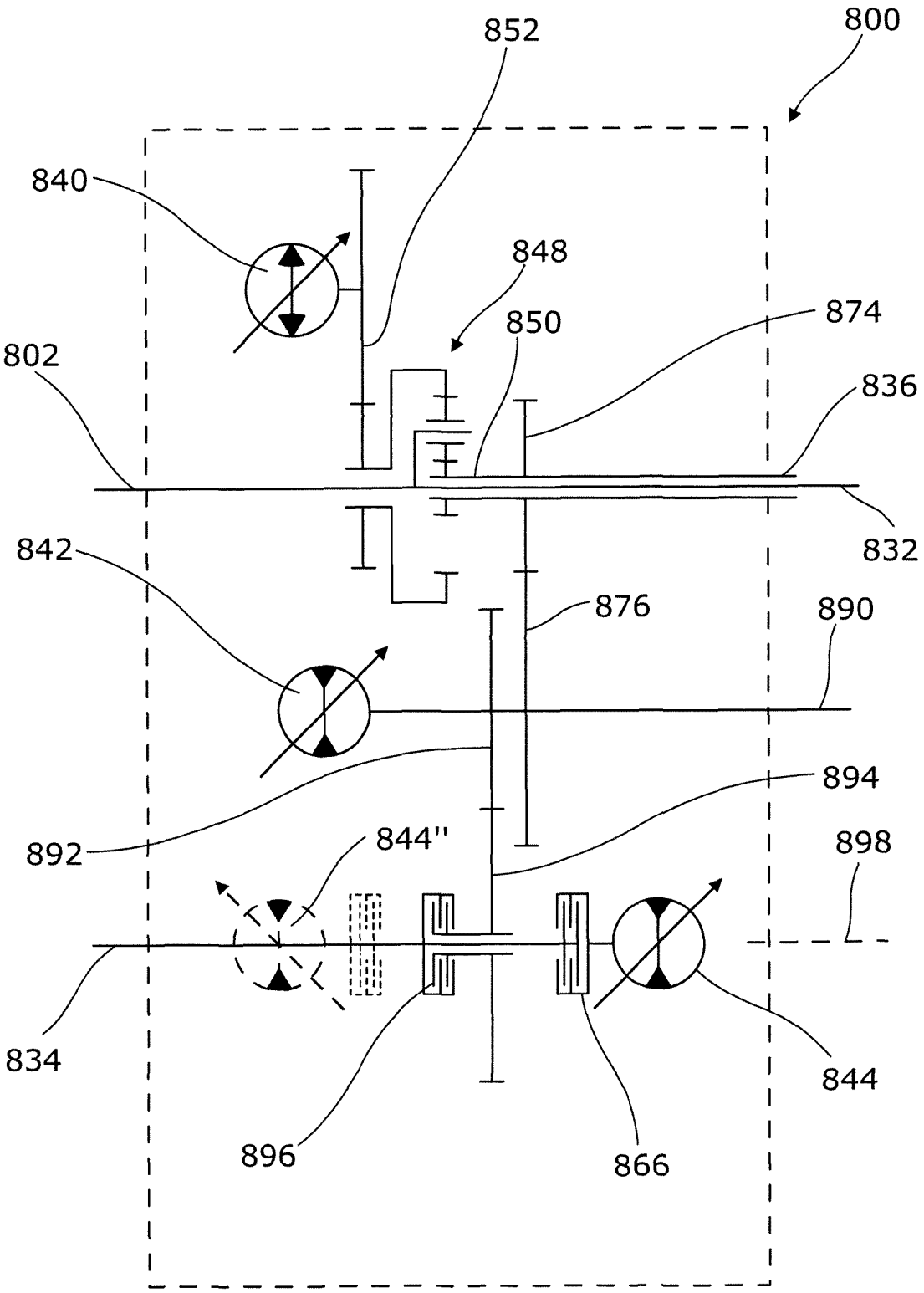
852
800
840
848
850
874
802
836
832
842
876
890
894
892
844"
898
834
844
896
866

Figure 16

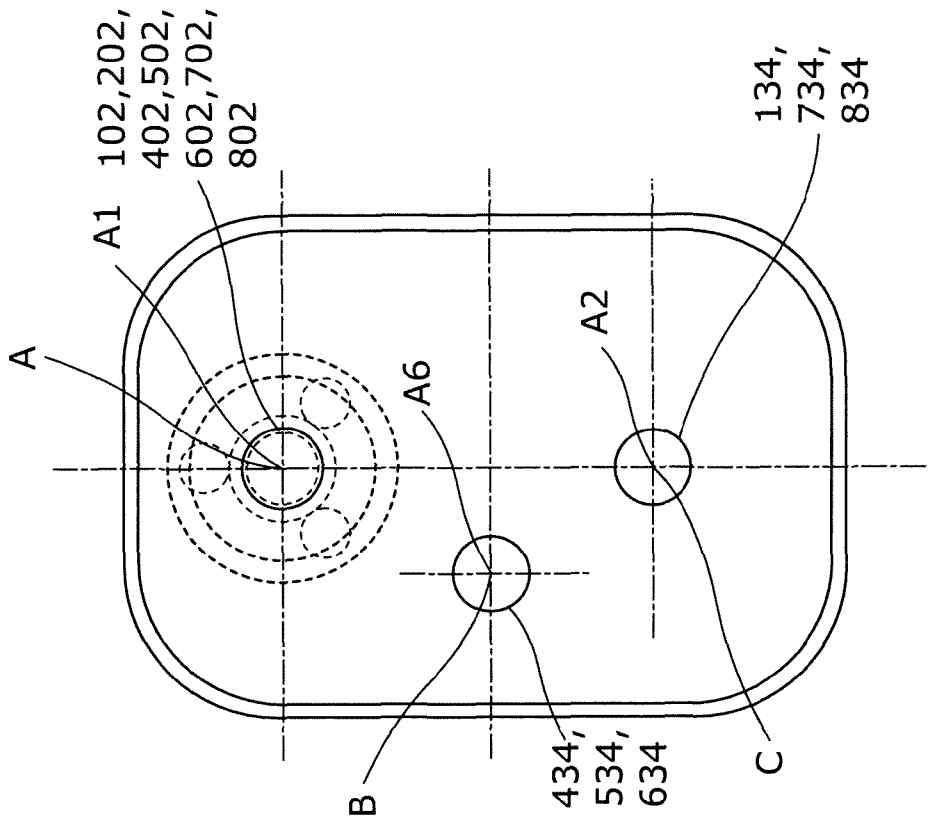

Figure 18

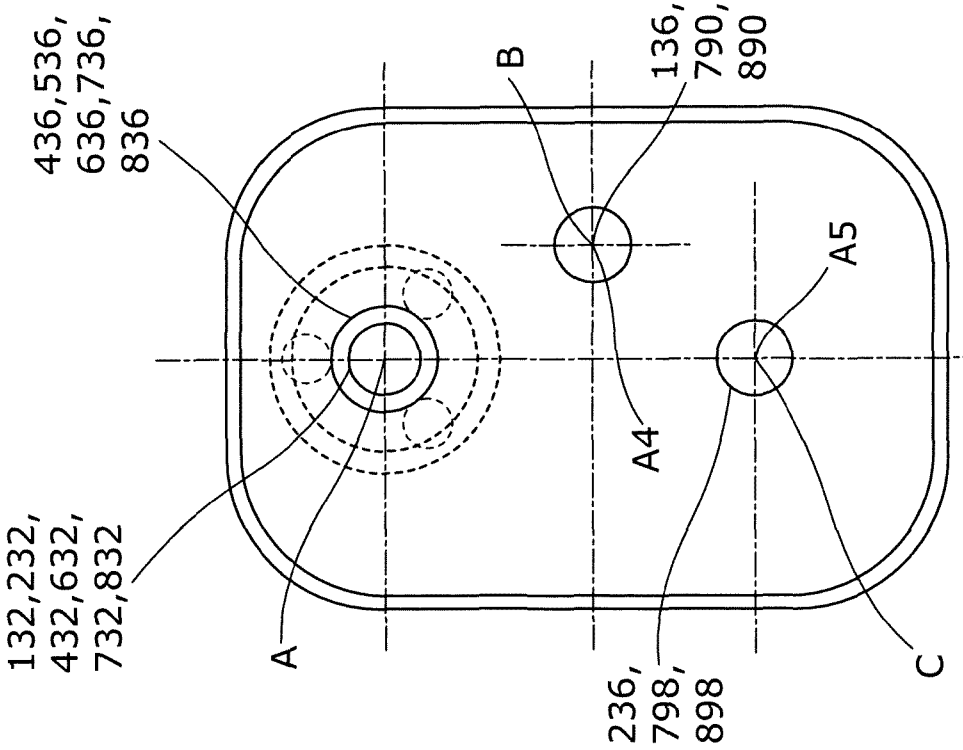

Figure 17

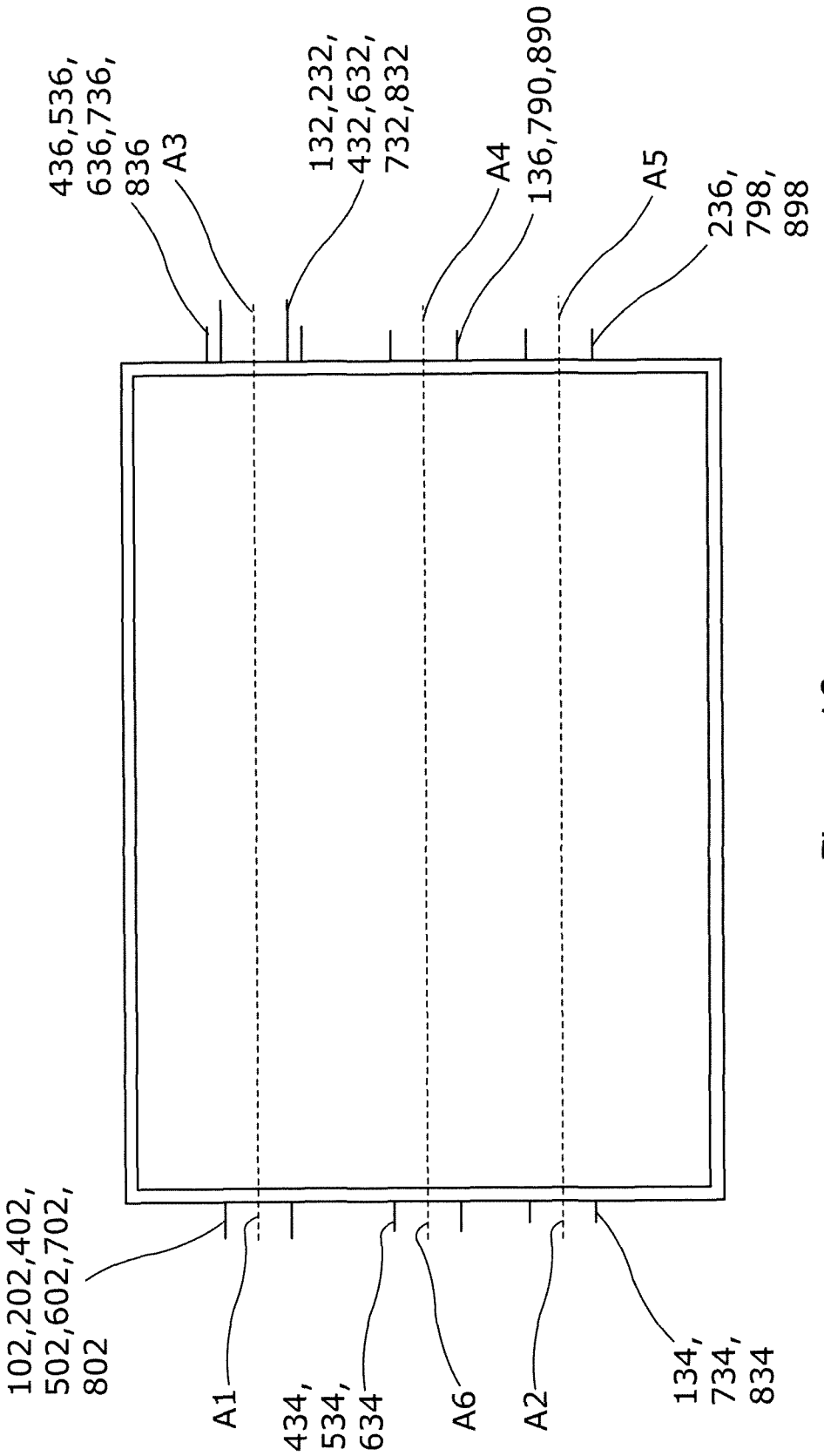
436,536,
636,736,
836
A3
132,232,
432,632,
732,832
A4
136,790,890
A5
236,
798,
898
102,202,402,
502,602,702,
802
A1
434,
534,
634
A6
A2
134,
734,
834

Figure 19

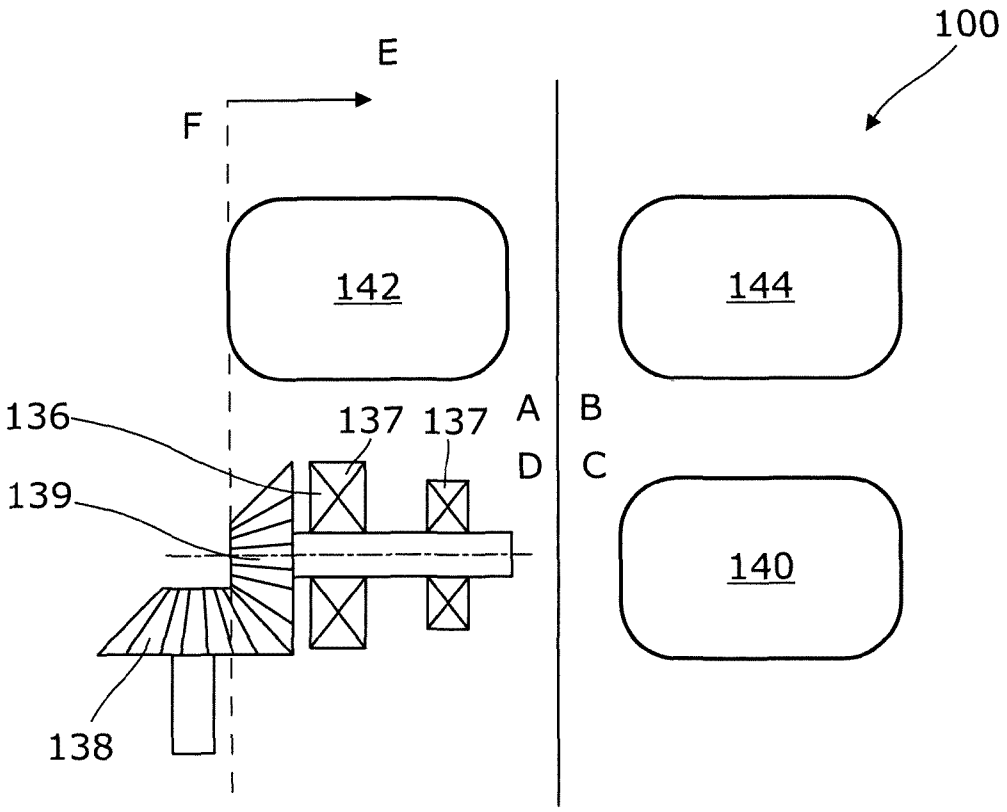

Figure 20

INTERNATIONAL SEARCH REPORT

International application No
PCT/EP2013/077927

A. CLASSIFICATION OF SUBJECT MATTER
INV. B60K17/36 F16H37/08 F16H47/04
ADD.

According to International Patent Classification (IPC) or to both national classification and IPC

B. FIELDS SEARCHED

Minimum documentation searched (classification system followed by classification symbols)
B60K F16H

Documentation searched other than minimum documentation to the extent that such documents are included in the fields searched

Electronic data base consulted during the international search (name of data base and, where practicable, search terms used)
EPO-Internal, WPI Data

C. DOCUMENTS CONSIDERED TO BE RELEVANT

Category*	Citation of document, with indication, where appropriate, of the relevant passages	Relevant to claim No.
X	US 2 399 201 A (BUCKENDALE LAWRENCE R ET AL) 30 April 1946 (1946-04-30) figures 1,5-7	1-4
X	WO 00/43695 A2 (MEYERLE MICHAEL [DE]) 27 July 2000 (2000-07-27) abstract; figures claim 12	1-8
X	US 3 247 738 A (SCHALL MYRON M) 26 April 1966 (1966-04-26) the whole document	1-4

☐ Further documents are listed in the continuation of Box C.

☒ See patent family annex.

* Special categories of cited documents :

"A" document defining the general state of the art which is not considered to be of particular relevance

"E" earlier application or patent but published on or after the international filing date

"L" document which may throw doubts on priority claim(s) or which is cited to establish the publication date of another citation or other special reason (as specified)

"O" document referring to an oral disclosure, use, exhibition or other means

"P" document published prior to the international filing date but later than the priority date claimed

"T" later document published after the international filing date or priority date and not in conflict with the application but cited to understand the principle or theory underlying the invention

"X" document of particular relevance; the claimed invention cannot be considered novel or cannot be considered to involve an inventive step when the document is taken alone

"Y" document of particular relevance; the claimed invention cannot be considered to involve an inventive step when the document is combined with one or more other such documents, such combination being obvious to a person skilled in the art

"&" document member of the same patent family

Date of the actual completion of the international search	Date of mailing of the international search report
3 March 2014	12/03/2014

Name and mailing address of the ISA/	Authorized officer
European Patent Office, P.B. 5818 Patentlaan 2 NL - 2280 HV Rijswijk Tel. (+31-70) 340-2040, Fax: (+31-70) 340-3016	Meritano, Luciano

INTERNATIONAL SEARCH REPORT

Information on patent family members

International application No
PCT/EP2013/077927

Patent document cited in search report	Publication date	Patent family member(s)	Publication date
US 2399201 A	30-04-1946	NONE	
WO 0043695 A2	27-07-2000	DE 10003174 A1	21-09-2000
		EP 1088179 A2	04-04-2001
		WO 0043695 A2	27-07-2000
US 3247738 A	26-04-1966	NONE	