E. W. HEDBERG.

CHAIR.

APPLICATION FILED JUNE 21, 1912.

1,117,379. Patented Nov. 17, 1914.

Fig. 1.

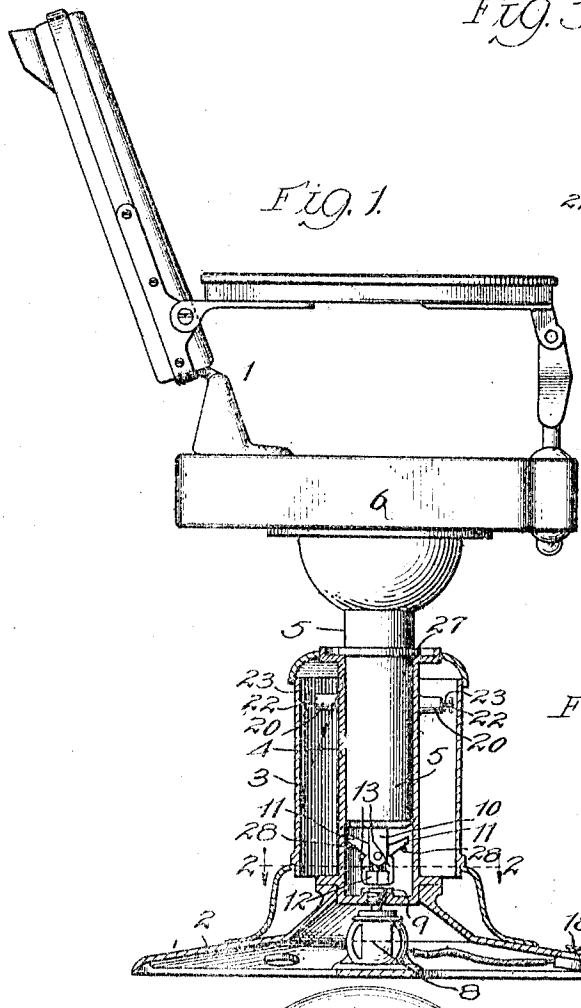

Fig. 3.

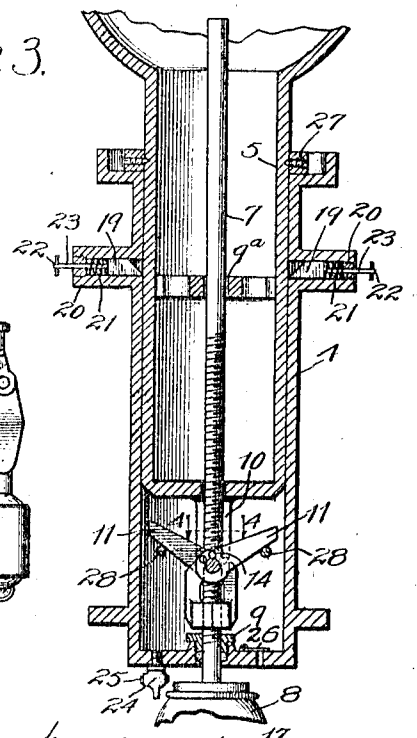

Fig. 4.

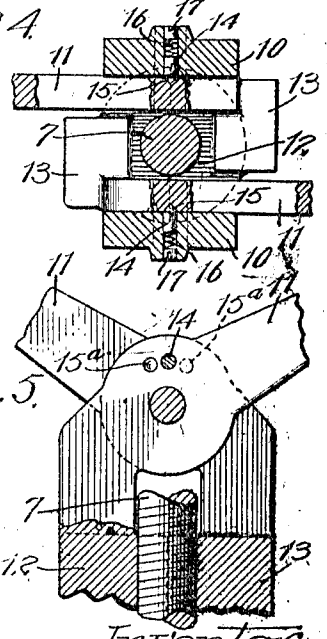

Fig. 2.

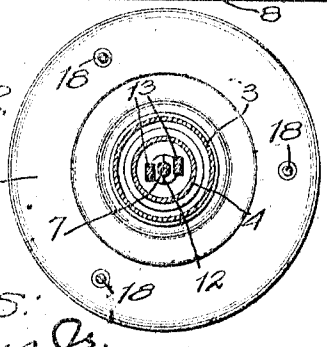

Fig. 5.

Witnesses:
G. W. Romans Jr.
R. Bauerle

Inventor:
Edward W. Hedberg.
By Luther L. Miller
Atty.

UNITED STATES PATENT OFFICE.

EDWARD W. HEDBERG, OF CHICAGO, ILLINOIS.

CHAIR.

1,117,379. Specification of Letters Patent. Patented Nov. 17, 1914.

Application filed June 21, 1912. Serial No. 704,955.

To all whom it may concern:

Be it known that I, EDWARD W. HEDBERG, a citizen of the United States, residing at Chicago, in the county of Cook and State of Illinois, have invented certain new and useful Improvements in Chairs, of which the following is a specification.

This invention relates to chairs, to be used by barbers, dentists, and others, and which are equipped with mechanism by means of which the chair seat may be freely rotated and the height of the seat may be varied at the will of the operator.

The object of the invention is to provide means for raising and lowering the chair that are of such a nature that they may be controlled by the operator in a very simple and effective way, a single movement of the foot of the operator being sufficient to raise and lower the chair, and a second, or releasing, movement of the foot while the chair is rising being all that is necessary to bring the chair to rest at the height desired.

In the accompanying drawings, Figure 1 is a side elevation of a chair equipped with a certain form of mechanism embodying the features of my invention. Fig. 2 is a section of the chair support along the line 2—2 of Fig. 1. Fig. 3 is a vertical section of the telescoping tubes of the chair and its support showing portions of the operating mechanism. Fig. 4 is a section along the line 4—4 of Fig. 3. Fig. 5 is a detail view showing the method of locking a portion of the elevating apparatus in operative position.

The means which I have provided herein for raising and lowering the chair include operating devices which may be actuated by the foot of the operator. The motive power which I have provided is an electric motor. By pressing upon a button, positioned in the base of the chair, the motor may be operated and the chair raised. If the button is held in its operative position the chair will continue to rise until a maximum height is reached and it will then sink until a minimum height is reached. When, however, the chair rises to any desired height, it will come to rest at this height and remain so if the operator removes his foot. So that to move the chair from one position to another, it is necessary only for the operator to press the button until the chair rises to the desired height and then release the button. The chair 1 is supported in this instance upon the base 2 by means of the frame 3 mounted on the base and inclosing a tubular upright 4 in which is slidably mounted a piston-like tube or post 5 attached to the chair seat 6. By this means the chair is free to be rotated or to be moved vertically relative to the support the tube 4 turning on its base support, and the post 5 being movable vertically in the tube. Concentric with the tube 4 and post 5 is a screw shaft 7. This shaft is rotated by an electric motor 8, the shaft of which may be a continuation of the shaft 7, or may be operatively connected thereto. The shaft 7 is supported in a friction bearing 9 in the lower end of the tube 4 and a guide bearing 9^a connected with the post 5. Projecting downwardly from the lower end of the post 5 are two brackets 10, at the lower ends of each of which is pivoted a bent lever 11. The lower ends of these levers form a threaded split-nut 12 which is adapted to be closed to coact with the thread on the shaft 7. When the upper ends of these levers are pressed upwardly the two members 13 of the nut are forced into operative relation with the shaft, but when the upper arms are moved downwardly the nut members are released from the shaft. By means of this mechanism it will be seen that when the members of the split-nut are held in coaction with the shaft 7 and the shaft is rotated in the proper direction the chair will be raised upwardly.

Any suitable means may be provided to hold the members of the nut in operative relation with the shaft. The means which I have provided herein comprise pins 14 with conical ends which are adapted to project into depressions 15 in the levers 11. These pins are slidably mounted in the brackets 10, and are backed by springs 16, the compression of which may be adjusted by means of the screws 17. When these pins are forced by the springs into the depressions 15 the split-nut will be locked in operative relation to the screw shaft.

The motor may be connected up to be operated by any suitable means. Herein I have provided the buttons 18, placed in convenient positions in the base 2, to each of which the motor is operatively connected. The motor is adapted to rotate in one direction only, and the direction of rotation is such as to cause the chair to move upward. Suitable means may be provided for limiting the height to which the chair will rise and for releasing the nut members 13 from the

screw shaft so as to allow the chair to sink. The means which I have provided comprise the stops 19 which are slidably but non-rotatably mounted in the hollow guides 20 fixed to the tube 4. Normally these stops are held in the guides by the post 5, but when the post rises so as to clear the end of the stops, the springs 21 will force the stops inwardly. Pins 22 are fixed to rods 23 attached to the stops 19, and prevent the stops from being forced too far inwardly. As the chair continues to rise, the upper ends of the levers 11 will come in contact with the projecting stops; and the pins 14 will be forced out of the depressions 15, the nut members 13 will be forced out of contact with the shaft 7, and the chair will then be released and will be free to sink. The pins 14 will pass into the depressions 15ª and the levers 11 will thus be locked in inoperative position. The inner ends of the stops 19 are beveled on the upper side, and the lower end of the post 5 is beveled, so that the stops will be forced out by the post when the latter descends, to prevent the stops holding the post elevated.

The post 5 fits snugly in the tube 4 so that there is little, if any, leakage of air between the walls; and the tube 4 is air tight. In the bottom of the tube 4 is placed a pet cock 24, the vent to which may be adjusted by means of the shank 25. When the chair is released upon reaching its maximum height, the air between the lower ends of the tubes 4 and the post 5 will act as a cushion, preventing sinking of the chair except as the compressed air passes out of the vent. A check valve 26 allows the air to enter freely as the chair is rising, but is held closed by the pressure of the contained air as the chair sinks. A collar 27 limits the downward motion of the chair by coming in contact with the upper end of the tube 4. As the collar 27 comes in contact with the tube the upper ends of the levers 11 come in contact with the pins 28 fixed in the wall of the tube 4, and the nut members 13 are forced together into operative relation with the shaft, the locking pins 14 being at the same time forced from the depressions 15ª and into the depressions 15, and thus again locking the split-nut in operative condition.

In practice the operation is as follows: The operator places his foot upon a button, the motor is thus started, the shaft 7 is rotated, and the chair is raised. This will occur in whatever position the chair may be, providing it is at rest when the button switch is closed, as the split-nut will then always be in operative position. The chair will then be raised and it will continue to rise until a maximum height is reached. It will then be automatically released and it will sink until the minimum height is reached. If, however, the operator releases the button, the chair will immediately come to rest, if it is rising at the time. If it is sinking at the time the button is released, it will continue to sink to the minimum position, and will then come to rest. So that if it is desired to bring the chair to rest at the minimum position, the operator removes his foot as the chair is sinking. If it is desired to bring the chair to rest above this position he removes his foot, as the chair is rising, when it reaches the desired height.

Although I have described somewhat in detail the mechanism provided, it is to be understood that modifications may be made therein by those skilled in the art without departing from the spirit of this invention.

I claim as my invention:

1. In a chair, the combination of a seat; means to elevate the seat; means to limit the height to which said seat may be elevated, said elevating means comprising a vertical screw connected with the base of said chair; means for rotating said screw; a nut composed of two members, said nut being connected with said seat and adapted to coact with said screw, said limiting means comprising an arm on each member of said nut; stops connected with the support of said seat; and means for moving said stops into the path of motion of said arms, whereby said members are moved out of contact with said screw.

2. In a chair, a chair seat and means for raising said seat comprising a screw shaft and a clutch normally coacting with said shaft, means for rotating the shaft, means for releasing the clutch when a predetermined height has been reached, means for locking said clutch in its inoperative position, whereby said chair is left unsupported, means for moving said clutch into operative position when said chair has sunk to a predetermined point, and means including a portion of said locking means for locking said clutch in operative position.

3. In a chair, a chair seat, means for supporting and raising said seat, means for controlling said raising means, automatic means for rendering inoperative said supporting and raising means, yielding means resisting the downward motion of said chair, and automatic means for placing said supporting and said raising means in operating position.

4. A chair comprising a seat and a support therefor, a vertical cylinder, a piston in said cylinder, one of the two last elements being stationarily mounted in said support and the other being carried by said seat and vertically movable therewith, means for raising the seat including a rotary screw shaft mounted in the support, a nut device mounted to travel with the seat and arranged to be moved into and out of threaded

engagement with said screw shaft, and means for disengaging said nut device from said shaft to permit said seat and the movable element carried thereby to descend, the air trapped in said cylinder forming a cushion to control the descent of the seat.

5. In a chair, in combination, a seat and a support therefor, a cylinder vertically mounted in said support, a piston carried by said seat and projecting downwardly into said cylinder, an electric motor directly beneath said cylinder and having its shaft disposed vertically, a screw shaft coaxial with the motor shaft and rigidly connected thereto, said screw shaft extending upwardly through said cylinder, a movable nut device mounted on the lower end of said piston within said cylinder and adapted to be moved into and out of threaded engagement with said screw shaft, stop means in said cylinder arranged to engage said nut device to move the latter out of engagement with said shaft and permit the descent of said seat and piston by gravity, and a stop device in said cylinder arranged to move said nut device into engagement with said screw shaft at the lower limit of travel of said seat.

6. In a chair, the combination of a seat, means for elevating the seat comprising a screw, a split member adapted to be operated by said screw, said member being connected to said seat, means for operating said screw, and means for limiting the height to which said chair may be elevated, said limiting means comprising yielding stops movable into the path of said member when the seat reaches a predetermined height and adapted to open said split member.

7. In a chair, the combination with a seat and a base, of a vertical screw rotatably mounted in said base, a threaded member movably carried by said seat, means for moving said member into threaded relation with said screw, and means automatically movable into the path of said member at a predetermined height of the seat for moving said member out of engagement with said screw.

8. In a chair, the combination with a seat and a base, of a vertical screw rotatably mounted in said base, a nut composed of two threaded members movably carried by said seat, said members normally engaging with said screw and thereby supporting said seat, means for rotating said screw to raise said seat, and means automatically movable into the path of said members for moving said members out of coaction with said screw, whereby gravity is free to move said seat downward.

9. In a chair, a chair seat and means for raising said seat comprising a vertical screw supported by the base of said chair, a nut composed of two members normally coacting with said screw and connected and movable with the said seat, means for separating the members of said nut, said means being normally inoperative and automatically movable into the path of said members when the seat reaches a certain height, and means for rotating said screw, whereby said nut is moved into operative relation with said separating means.

10. A chair comprising a seat and a support therefor, a cylinder vertically mounted in said support and closed at the lower end, a piston projecting from said seat and fitting into said cylinder, means for supporting and raising said piston in said cylinder, said means being releasable from the piston, valve means in the lower end of said cylinder, and automatic means for releasing said supporting and raising means for said piston when a predetermined height is reached.

11. A chair comprising a seat and a support therefor, means for raising said seat in said support, said means comprising a member connected to said seat, a screw shaft operatively connected with said member and connected to said support, and means for rotating said shaft, means movable laterally into the path of said member for disconnecting said member from said shaft when the seat has been raised to a predetermined height, whereby gravity will cause said seat to sink, and means for operatively connecting said member with said shaft when the seat has sunk to a predetermined point.

12. In a chair, a chair seat, means for elevating said seat, including a threaded member and a vertical screw shaft having a threaded engagement with said member, means for rotating said shaft in one direction only, means for automatically disengaging said shaft and said member at a predetermined point, and means independent of said screw shaft for controlling the lowering of said seat.

13. In a chair, a chair seat, an electric motor, a switch for controlling said motor, and means driven by the motor to successively raise said seat to a maximum height so long as said switch is closed, and means to automatically release said raising means, to permit said seat to drop after each lift to said height, whereby said seat may be stopped at any desired height, by closing said switch and opening it at the proper moment.

14. A chair comprising a seat and a support therefor, a rotatable cylinder vertically mounted in said support, a piston projecting downwardly from said seat into said cylinder, a vertical screw shaft within said cylinder, means for rotating said shaft, and a nut device movably mounted on the lower end of said piston and adapted to be moved into and out of threaded engagement with said screw shaft.

15. In a chair, in combination, a seat and

a support therefor, a rotatable cylinder vertically mounted in said support, a piston carried by said seat and projecting downwardly into said cylinder, an electric motor directly beneath said cylinder and having its shaft disposed vertically, a screw shaft coaxial with the motor shaft and rigidly connected thereto, said screw shaft extending upwardly through said cylinder, and a nut device movably carried by said piston and arranged to be automatically moved into and out of engagement with said screw shaft at the limits of travel of said piston.

In testimony whereof I affix my signature in the presence of two witnesses.

EDWARD W. HEDBERG.

Witnesses:
EARL C. CARLSON,
GEORGE L. CHINDAHL.