J. F. BOORAEM & G. E. ROHMER.

FASTENING DEVICE.

APPLICATION FILED DEC. 18, 1912.

1,120,369.

Patented Dec. 8, 1914.

Fig. 1.

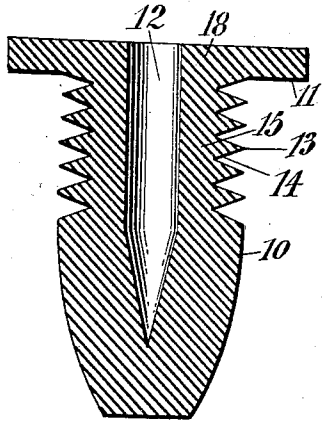

Fig. 2.

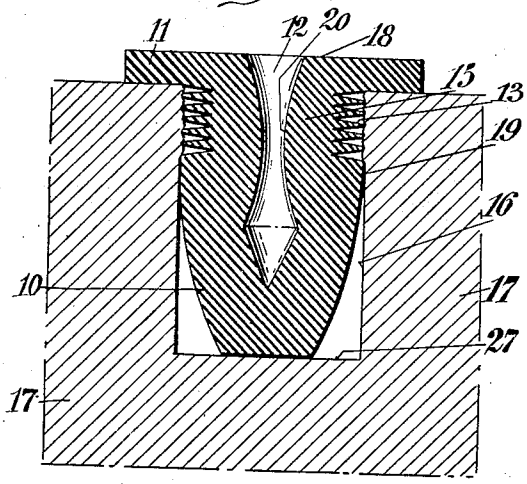

Fig. 3.

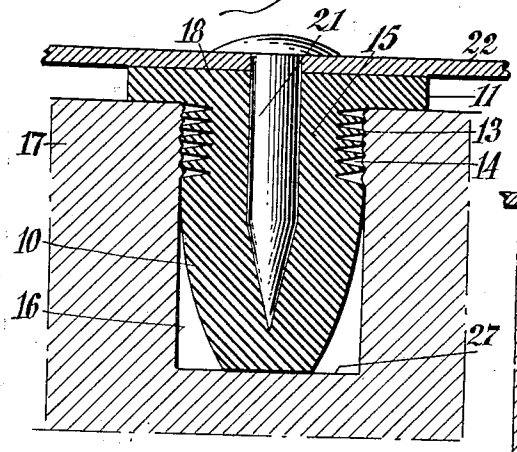

Fig. 4.

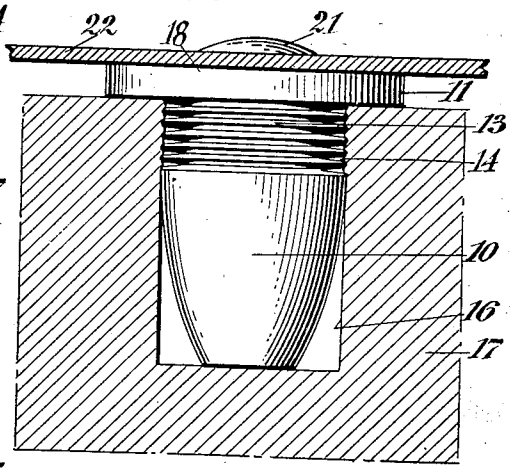

Fig. 5.



Fig. 6.

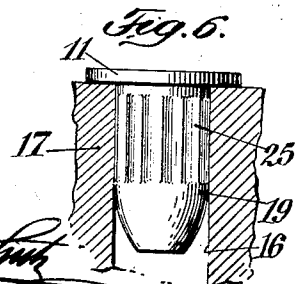

Witnesses:

Julius A. Schutz

John Murtagh

Inventors

John Francis Booraem,

Gabriel E. Rohmer,

By their Attorneys

Goepel & Goepel

UNITED STATES PATENT OFFICE.

JOHN FRANCIS BOORAEM, OF GREENWICH, CONNECTICUT, AND GABRIEL E. ROHMER, OF RIDGEFIELD PARK, NEW JERSEY, ASSIGNORS TO THE BOORAEM & ROHMER PATENT COMPANY, A CORPORATION OF NEW YORK.

FASTENING DEVICE.

1,120,369. Specification of Letters Patent. Patented Dec. 8, 1914.

Application filed December 18, 1912. Serial No. 737,433.

To all whom it may concern:

Be it known that we, JOHN FRANCIS BOORAEM and GABRIEL E. ROHMER, both citizens of the United States, the former a resident of Greenwich, in the county of Fairfield and State of Connecticut, and the latter a resident of Ridgefield Park, in the county of Passaic and State of New Jersey, have invented certain new and useful Improvements in Fastening Devices, of which the following is a specification.

This invention relates to fastening-devices, and more particularly to that kind used for fastening carpets, rugs, etc., to metal or stone or concrete floors and stairways.

The object of the invention is to provide a simple and convenient fastening-device which may be readily and firmly secured in metal or stone or concrete, and to which a carpet or rug may be readily fastened by means of nails or suitable pin-screws or other means.

For this purpose our invention consists of a fastening-device having a collapsible portion, and an opening in the collapsible portion to enable the same to be readily collapsed and the cross-section of the hole correspondingly reduced, so as to afford friction to the entering nail or pin.

In the accompanying drawings, Figure 1 shows in vertical section a fastening-device embodying the invention, in its condition before insertion into a hole in stone, metal or concrete, Fig. 2 is a similar section showing the fastening-device in position in a hole in stone, metal or concrete, before insertion of the fastening nail. Fig. 3 shows the device in like vertical section in fastening position with a carpet or rug secured thereto by a nail, Fig. 4 is a side view of the improved device, with the stone shown in section, and showing the device in a position similar to that of Fig. 3, with the nail secured therein, Fig. 5 is a horizontal section of another embodiment of the invention having vertical ribs instead of horizontal ribs, and Fig. 6 is a side-elevation of the device of Fig. 5 in position in a hole.

Similar characters of reference indicate corresponding parts throughout the views.

Referring to the drawings, and more particularly to Figs. 1 to 4 thereof, our improved fastening-device consists of a plug of suitable material such as lead or alloy, which has a main-portion 10 of diameter substantially the size of the hole into which it is to be inserted. The device has an extending flange 11 adapted to seat on the upper face of the stone or metal, and a hole 12 is provided vertically and preferably centrally in the device. Between the flange 11 and the main-portion 10 a collapsible portion 13 is provided, having a series of cut-out portions or grooves 14. The material 15 of the body-portion remaining near the cut-out portions is considerably reduced in resisting qualities at this part of the device. The object of this reduction in resisting qualities is clearly shown in Fig. 2, where the serrations are brought together by compression. This results from the insertion of the main-portion 10 into the hole 16 of the stone, metal or concrete floor 17. The overcoming of the friction during the insertion of the device requires considerable pressure to be exerted on the top 18 of the device, and this pressure on the one hand, and the friction resisting the insertion at the point 19 on the other hand, as also abutment of the bottom of the main-portion 10 with the bottom of the hole, causes the material at 15 to be compressed, and hence the serrations brought close to each other as shown. As the hole 12 permits the material at 15 to move inwardly, the walls forming the hole 12 are brought into curved shape as shown at 20, the intermediate part of the hole 12 being thereby reduced in cross-section in respect to that of the upper part of the hole and the lower part of the hole. Hence when a nail or other fastening means 21 is inserted into the hole 12 with the central part of the hole 12 narrow as shown at 20, the nail has to overcome the friction and secures thereby a firm hold in the fastening-device. By the downward pressure exerted by the nail the material at 15 is pressed outwardly and thereby the serrations 13 are pressed against the walls of the hole 16 of the stone, and a very tight fit is secured. In Figs. 3 and 4 the nail 21 holds a piece of carpet or rug 22 in position.

In Figs. 5 and 6, the serrations or ribs 25 are arranged vertically instead of horizontally, and extend from near the top of the device to the part 19 corresponding to the part 19 of the device of Figs. 1 to 4. On the

insertion of the device in the stone, the ribs are bent toward each other in an irregular manner and at the same time the hole or bore 26 is reduced in diameter in like manner as before described with relation to the hole 12.

The device shown in Figs. 5 and 6 is also provided with a flange 11, but this may be omitted in this device as also in the device shown in Figs. 1 to 4. The hole in the stone into which the device is inserted may be provided with a bottom 27 as in Figs. 2, 3 and 4, or the same may be bottomless as in Fig. 6. The hole 12 in the fastening device may also extend entirely through the same, instead of being closed at the bottom as shown.

By the means proposed a very simple fastening device is provided, which may be inexpensively manufactured, and which is easily inserted for use whenever required.

We have shown two embodiments of the invention, but it is obvious that the invention may take other forms without departing from the spirit of the same as defined in the appended claims.

We claim:

1. An improved fastening device formed of a compressible material, comprising a main portion, a relatively weakened and collapsible portion, said collapsible portion having a bore for the insertion of the fastening means bulged in by the collapsing of the collapsible portion.

2. An improved fastening device formed of a compressible material, comprising a main portion and a relatively weakened and collapsible portion having external bendable circumferentially-arranged ribs, said collapsible portion having a bore for the insertion of the fastening means bulged in by the collapsing of the collapsible portion.

3. An improved fastening device formed of a compressible material, comprising a main portion, an extending flange portion, and a relatively weakened and collapsible portion at the external part thereof, said collapsible portion having a bore for the insertion of the fastening means bulged in by the collapsing of the collapsible portion.

4. An improved fastening device formed of a compressible material, comprising a main portion and a bored-out portion weakened relatively to said main portion, said weakened portion being adapted to collapse in a direction parallel to its bore, whereby the collapsing of said weakened portion bulges in said bore, said weakened portion having an extending flange portion, said bulged-in bore being adapted to receive a fastening means.

5. An improved fastening device formed of a compressible material, comprising a main portion, and a bored-out portion weakened relatively to said main portion by a series of external circumferential indentations in the walls thereof, whereby said weakened portion is adapted to collapse in a direction parallel to its bore, and bulge in said bore.

In testimony, that we claim the foregoing as our invention, we have signed our names in presence of two subscribing witnesses.

JOHN FRANCIS BOORAEM.
GABRIEL E. ROHMER.

Witnesses:
JOHN MURTAGH,
F. HOGG.