(12) INTERNATIONAL APPLICATION PUBLISHED UNDER THE PATENT COOPERATION TREATY (PCT)

(19) World Intellectual Property Organization
International Bureau

(43) International Publication Date
28 April 2011 (28.04.2011)

PCT

(10) International Publication Number
WO 2011/047820 A1

(51) International Patent Classification:
G01L 5/00 (2006.01)

(21) International Application Number:
PCT/EP2010/006356

(22) International Filing Date:
19 October 2010 (19.10.2010)

(25) Filing Language: English

(26) Publication Language: English

(30) Priority Data:
PCT/EP2009/007559
22 October 2009 (22.10.2009) EP

(71) Applicant *(for all designated States except US)*: **SKF B.V.** [NL/NL]; P.O. Box 2350, NL-3430 DT Nieuwegein (NL).

(72) Inventor; and

(75) Inventor/Applicant *(for US only)*: **HOLSNIJDERS, Jos** [NL/NL]; Tiendweg 124, NL-4142 EN Leerdam (NL).

(74) Agent: **BURÖ, Sven, Peter**; SKF B.V., P.O. Box 2350, NL-3430 DT Nieuwegein (NL).

(81) Designated States *(unless otherwise indicated, for every kind of national protection available)*: AE, AG, AL, AM, AO, AT, AU, AZ, BA, BB, BG, BH, BR, BW, BY, BZ, CA, CH, CL, CN, CO, CR, CU, CZ, DE, DK, DM, DO, DZ, EC, EE, EG, ES, FI, GB, GD, GE, GH, GM, GT, HN, HR, HU, ID, IL, IN, IS, JP, KE, KG, KM, KN, KP, KR, KZ, LA, LC, LK, LR, LS, LT, LU, LY, MA, MD, ME, MG, MK, MN, MW, MX, MY, MZ, NA, NG, NI, NO, NZ, OM, PE, PG, PH, PL, PT, RO, RS, RU, SC, SD, SE, SG, SK, SL, SM, ST, SV, SY, TH, TJ, TM, TN, TR, TT, TZ, UA, UG, US, UZ, VC, VN, ZA, ZM, ZW.

(84) Designated States *(unless otherwise indicated, for every kind of regional protection available)*: ARIPO (BW, GH, GM, KE, LR, LS, MW, MZ, NA, SD, SL, SZ, TZ, UG, ZM, ZW), Eurasian (AM, AZ, BY, KG, KZ, MD, RU, TJ, TM), European (AL, AT, BE, BG, CH, CY, CZ, DE, DK, EE, ES, FI, FR, GB, GR, HR, HU, IE, IS, IT, LT, LU, LV, MC, MK, MT, NL, NO, PL, PT, RO, RS, SE, SI, SK, SM, TR), OAPI (BF, BJ, CF, CG, CI, CM, GA, GN, GQ, GW, ML, MR, NE, SN, TD, TG).

Published:

— *with international search report (Art. 21(3))*

(54) **Title**: SENSOR DEVICE FOR MATERIAL-EMBEDDED SENSING

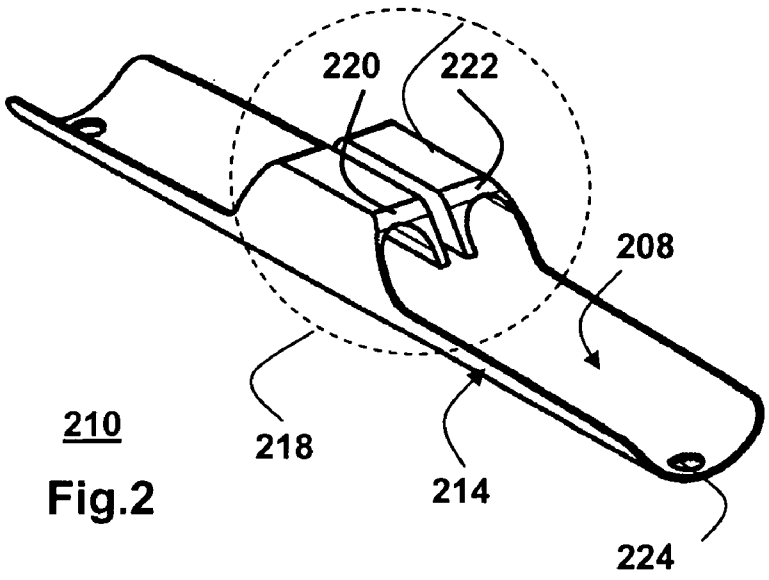

Fig.2

(57) **Abstract**: A device is configured for material-embedded sensing of strain at a location in a hole in e.g. an outer ring of a rolling element bearing. The device comprises sensor means for sensing strain. The device has a carrier (210) for being inserted into the hole along the length of the carrier. The carrier has an inner surface (208) for accommodating the sensor means, and an outer surface (214) that is curved along the carrier's width, substantially perpendicular to the carrier's length. The outer surface has a curvature that corresponds to a curvature of the hole, and the carrier is substantially elastically deformable along the carrier's width for facilitating the positioning of the device.

WO 2011/047820 A1

SENSOR DEVICE FOR MATERIAL-EMBEDDED SENSING

FIELD OF THE INVENTION

The invention relates to a device for material-embedded sensing of strain in a physical object, to a carrier for use in such a device, to a physical object comprising such a device, and to a method for material-embedded sensing of strain in a physical object.

BACKGROUND ART

The material-embedded sensing of a physical quantity, e.g., strain or temperature, refers to a technology for sensing at a location, internal to a physical object, e.g., a rolling element bearing, in contrast with a technology for sensing at an outer surface of the physical object. Material-embedded sensing is also being referred to as "down-hole sensing". Sensing at an internal location within the material of the physical object may be preferred over sensing at the outer surface, for a variety of reasons. For example, the phenomenon to be studied via the sensing is more interesting, e.g., more pronounced, within the physical object than at the physical object's outer surface. As another example, if a sensor for sensing the physical quantity is positioned inside the physical object, the sensor can be well kept out of harm's way. The sensor is then well protected against disturbances from outside (e.g., a colliding foreign object) and against undesired ambient influences (humidity, dust, acidity, etc.). As still another example, material-embedded sensing may be the only way to sense the physical quantity, for example, if there is not enough room at the physical object's outer surface to accommodate the sensor, e.g., if the physical object is only one of multiple parts that together form a larger machine when assembled, and the parts are mounted in a spatially compact arrangement. Within this context, it is remarked that SKF market sensor-bearing units. A sensor-bearing unit is a mechatronic machine component that combines a rolling element bearing with sensor unit, the latter being physically integrated with the rolling element bearing so as to be shielded from external influences.

Material-embedded sensing typically requires that a sensor be positioned within a hole or recess made in the material of the physical object. Multiple holes can be used to

position a plurality of sensors distributed among multiple locations within the physical object. The dimensions of the hole and, if there are two or more holes, the spatial distribution of the holes across the physical object, are such that the holes do not affect the physical properties of the physical object that are relevant to the proper functioning of the physical object and to the proper functioning of the machine, of which the physical object forms a part. However, properly positioning the sensor into the hole and fixing the position of the gauge becomes more difficult with smaller dimensions of the hole and at large hole depths.

An example of material-embedded sensing in a rolling element bearing is disclosed in Japanese patent application publication JP2007024073.

SUMMARY OF THE INVENTION

An embodiment of the invention relates to a device configured for material-embedded sensing of strain at a location on a wall of a hole in a physical object, where the wall has a predefined curvature. The device comprises a strain sensor for sensing the strain, and a carrier configured for being inserted into the hole along a first dimension of the carrier. The carrier has an inner surface accommodating the strain sensor. The carrier has an outer surface with a curvature in a second dimension substantially perpendicular to the first dimension. The curvature in the second dimension matches the predefined curvature of the hole wall and the carrier is substantially elastically deformable in the second dimension.

By means of deforming the carrier, the curvature of the outer surface can be increased, and/or its width or cross-section in the second dimension can be decreased so as to facilitate positioning the carrier within the hole in the physical object. As the carrier is elastically deformable, the carrier's shape returns to its initial form. Furthermore, given that the curvature of the carrier's outer surface is designed to match the curvature of hole wall, the carrier forms a close fit with the wall. The carrier is permanently fixed against the wall, e.g., using suitable glue between the wall and the outer surface of the carrier. As the carrier is elastically deformable, the carrier can be inserted into the hole

without a risk of scraping off the glue applied to the wall of the hole and/or to the outer surface of the carrier. This approach is especially suitable for positioning a strain sensor for sensing the deformation of the wall when the physical object is put under a load in operational use of the strain sensor. The strain sensor is attached to the carrier, and the carrier is attached to the wall. As a result, the strain sensor is subjected to forces that arise from, and are indicative of, the deformation of the wall of the hole.

In an embodiment of the device, the carrier comprises clamping means that is configured for controlling an elastic deformation of the carrier by means of compressing the clamping means. The clamping means thus enables the operator to controllably change the carrier's shape so as to facilitate the insertion and positioning into the hole.

In a further embodiment, the clamping means comprises a first lip projecting from the inner surface, and a second lip projecting from the inner surface. The first lip and the second lip extend in a plane substantially perpendicular to the first dimension. The first lip and the second lip are positioned opposite one another in the second dimension. Each of the first lip and the second lip curls towards the inner surface of the carrier. Accordingly, one can position a respective jaw of a pair of, e.g., needle-nose pliers underneath the first and second lips and push the first and second lips towards each other by squeezing the handles of the needle-nose pliers. As a result, a bending force is applied via the inner surface to the outer surface of the carrier that causes the curvature to increase. The increased curvature reduces the second dimension of the carrier so that the carrier can easily be moved into the hole and easily be positioned within the hole.

In a further embodiment, the device comprises a plug formed as a spatial complement to a spatial configuration of at least part of the clamping means so as to fit in a space defined by the first lip, the second lip and the inner surface. The strain sensor is mounted on the plug. The plug is mounted in the space with the strain sensor facing the inner surface. The plug fits the space and thus serves as a tool to properly position the strain sensor on the carrier. For example, the strain sensor is attached on one side to

the plug using a low-tack double-sided adhesive tape, while the other side of the strain sensor is provided with glue. The plug is inserted into the carried and the strain gauge is firmly pressed against the inner surface of the carrier. After the glue has cured, the plug can be easily removed the since the glued connection is much stronger than the adhesive tape connection.

In a further embodiment, the carrier has a spatial configuration that is substantially mirror-symmetrical with respect to a plane that is substantially perpendicular to the second dimension. The device comprises a further strain sensor. The strain sensor is positioned at a first location on the inner surface. The further strain sensor is positioned at a second location on the inner surface. The first and second positions are mirror-symmetrical with respect to the plane. For example, the inner surface has an area formed as a first curved segment of a first cylindrical surface having an axis that lies in the plane of mirror-symmetry specified above. The outer surface is formed as a second curved segment of a second cylindrical surface co-axial with the first cylindrical surface and having the curvature in the second dimension. The first and second locations occur in the area on the first cylindrical surface and span an angle of substantially 90°. Computer calculations show that the strain sensor and the further strain sensor sense substantial responses in operational use if positioned in this manner.

In a further development, the device has a maximum height in a third dimension, substantially perpendicular to the first dimension of the carrier and to the second dimension of the carrier. The maximum height is smaller than a maximum width of the device in the second dimension when the carrier is not deformed. The height of the device grows when the carrier is elastically deformed and the curvature increases. The width and the curvature are such that they match with the diameter and shape of the hole. Assume that the height of the device were of the same magnitude as the width, or even greater, when the carrier is not deformed. Then, the increased height as a result of deforming the carrier would hamper the carrier to be inserted into the hole. The advantage of this further development is that the device can be used in circular holes.

In a further embodiment, the clamping means is formed as an integral part of the carrier. For example, the carrier is made by subjecting a piece of material to electric discharge machining so as to properly shape the outer surface, the inner surface and the clamping means all in one go. An advantage of electric discharge machining is that residual stresses are absent from the carrier. The absence of internal stress is a relevant property, for example, in case the sensor means accommodated by the carrier comprises a strain gauge. Residual stress can cause an undesirable non-linear response from the strain sensors in the sensing means. In addition, the result of subjecting a piece of material to electric discharge machining, is a workpiece of the desired shape, e.g., the carrier, and a part that has a shape that is spatially complementary to the shape of the carrier. The spatial complement of the carrier is used as the plug that fits neatly in the opening defined by the first lip, the second lip and the upper surface of the carrier.

In a further embodiment of the device in the invention, the carrier also accommodates a temperature sensor, e.g., a thermocouple. Measuring the temperature in operational use of the strain sensor enables to compensate the strain measurements for dependencies on temperature. Moreover, the temperature of the physical object at the mounted depth may be variable of interest in its own right.

Above embodiments of the invention relate to a device configured for material-embedded sensing of strain within a physical object. The invention can also be commercially exploited by, e.g., providing a carrier for use in such a device. Therefore, the invention also relates to a carrier configured for being inserted along a first dimension of the carrier into a hole in a physical object. For example, the carrier has an inner surface for accommodating a strain sensor, and an outer surface with a curvature in a second dimension substantially perpendicular to the first dimension, and matching a further curvature of the hole. The carrier is substantially elastically deformable in the second dimension so as to be able to deform under a strain to be measured by the strain sensor. The carrier comprises clamping means configured for controlling an elastic deformation of the carrier by means of compressing the clamping means. The

clamping means comprises a first lip projecting from the inner surface and a second lip projecting from the inner surface. The first lip and the second lip extend in a plane substantially perpendicularly to the first dimension. The first lip and the second lip are positioned opposite one another in the second dimension. Each of the first lip and the second lip curls towards the inner surface of the carrier. Preferably, the carrier is provided in combination with a matching plug that is formed as a spatial complement to a spatial configuration of at least part of the clamping means, so as to fit in a space defined by the first lip, the second lip and the inner surface.

The invention can also be commercially exploited as a physical object with a hole that accommodates a device configured for material-embedded sensing of strain at a location on a wall of the hole. The device comprises a strain sensor for sensing the strain. The device comprises a carrier inserted into the hole along a first dimension of the carrier. The carrier has an inner surface that accommodates the strain sensor. The carrier has an outer surface with a curvature in a second dimension, substantially perpendicular to the first dimension, whereby the curvature in the second dimension matches a curvature of the hole wall. The carrier is made of a material that is substantially elastically deformable in the second dimension. For example, the physical object comprises a rolling element bearing with an inner ring and an outer ring. The hole is made in one of the inner or outer ring, in a direction parallel to the axis of the bearing, raceway or the outer raceway and accommodates the device. The device of the invention facilitates positioning the device into the hole by reducing the device's second dimension (i.e., width). As a result, the diameter of the hole can be kept small, thus avoiding compromising the strength and integrity of the bearing.

The invention also relates to a method for positioning within a hole, present in a physical object, a device configured for material-embedded sensing of strain at a location on a wall of the hole. The device comprises a carrier accommodating a strain sensor on an inner surface of the carrier. The carrier has a first dimension and a second dimension that is substantially perpendicular to the first dimension. The carrier has an outer surface with a curvature in the second dimension. The curvature matches a further curvature of

the hole. The carrier is adapted to be elastically deformable in the second dimension. The method comprises elastically deforming the carrier along the second dimension for inserting the device into the hole.

BRIEF DESCRIPTION OF THE DRAWINGS

The invention is explained in further detail, by way of example and with reference to the accompanying drawings, wherein:

Fig.1 is a diagram of a system in the invention; and

Figs. 2, 3 and 4 are diagrams of an embodiment of a device according to the invention.

Throughout the Figures, similar or corresponding features are indicated by same reference numerals.

DETAILED EMBODIMENTS

The invention relates to, among other things, a device configured for material-embedded (or: down-hole) sensing of the strain at a location on a wall of a hole in e.g. an outer ring of a rolling element bearing. The device comprises one or more strain sensors. The device has a carrier for being inserted into the hole along the length of the carrier. The carrier has an inner surface for accommodating the one or more strain sensors, and an outer surface, curved in the direction of the carrier's width, i.e., curved in a plane substantially perpendicular to the carrier's length. The carrier is elastically deformable along the carrier's width so as to facilitate positioning the device within the hole. The carrier is designed to enable the one or more strain sensors to get a measurable reading in a material-embedded position. For this, the strain sensors are firmly attached, e.g., glued, to the inner surface of the carrier. The outer surface of the carrier is firmly attached, e.g., glued, to the wall of the hole. The curvature of the outer surface matches the curvature of the hole. The carrier is deformable so that it can be inserted into the hole without scraping off glue that is applied to the outer surface of the carrier.

Fig.1 is a diagram of a physical object 100 subjected to strain that is to be measured. In the example shown, the physical object 100 comprises a rolling element bearing with an

inner ring 102, an outer ring 104, and a plurality of rolling elements between the inner ring 102 and the outer ring 104. In order to not obscure the drawing, only a first one of the rolling elements and a second one of the rolling elements have been indicated with reference numerals 106 and 108, respectively. The physical object 100 comprises a device 110 according to the invention. The device 110 is configured for material-embedded sensing of strain at a location in a hole in the physical object 100. In the example shown, the device 110 is accommodated in a hole made in the outer ring 104. The physical object 100 may comprise additional devices (not shown) according to the invention, accommodated in respective additional holes that are made in the outer ring 104 and/or in the inner ring 102.

The bearing rings are relatively rotatable, and in one application, the inner ring 102 is kept stationary and the outer ring 104 rotates during operational use of the bearing 100. The device 110 may have its own power supply (not shown) onboard, e.g., a battery, or receive power from an external source (not shown) e.g., via an onboard converter (not shown) converting the energy of incident electromagnetic radiation into electrical energy. The sensor signal generated by the device 110 may be stored at the device 110 itself for later retrieval. The device 110 may then be equipped with a suitable semiconductor memory (not shown). Alternatively, one may prefer processing the sensing signal, generated by the device 110, in real-time. Then, the device 110 may be equipped with a wireless transmitter (not shown) for transmitting the sensing signal to a receiver (not shown) that relays the sensing signal to a signal processing system 114 external to the rolling element bearing.

Figs. 2, 3, 4 and 5 are diagrams illustrating an embodiment of a carrier 210 of the device 110 in the invention.

Fig.2 gives an impression of a three-dimensional shape of the carrier 210. Fig.3 gives a side view of the carrier 210 indicating a first dimension 302, here: length, of the carrier 210 and a third dimension 304, here: height, of the carrier 210. Fig.4 gives a top view of the carrier 210, indicating a second dimension 402, here: width, of the carrier 210. Fig.5

is a diagram of a cross-section of the carrier 210 accommodating a first strain sensor 502 and a second strain sensor 504 at an inner surface 208 of the carrier 210. The cross-section is taken in a plane A-A, as indicated in Fig.4, perpendicular to the length 302. The diagram of Fig.5 also indicates a cross-section of a plug 506 that fits into a space defined by the carrier 210.

The carrier 210 is designed for being inserted into a cylindrical hole with a uniform circular cross-section perpendicular to an axis of rotational symmetry of the hole and for being attached to a hole of the wall by means of e.g. glue. The direction of insertion is parallel to the length 302 of the carrier 210. The carrier 210 has an outer surface 214. The outer surface 214 has a curvature, i.e., is curved, along the width 402 of the carrier 210. The carrier 210 is substantially elastically deformable in a direction of the width 402. When the carrier 210 is being deformed, the width 402 of the carrier 210 decreases so that the carrier 210 can be inserted into a hole with a diameter corresponding to the curvature of the outer surface 214, such that at least portions of the outer surface 214 do not make contact with the hole wall and scrape off the glue that is needed to firmly attach these portions to the hole wall. Suitably, the first and second strain gauges 502, 504 are positioned on the inner surface 208 of the carrier opposite from the aforementioned portions of the outer surface 214 which remain out of contact with the hole wall during insertion of the carrier.

The material, from which the carrier 210 is made, and the precise shape and thickness of the carrier 210 determine the extent to which the carrier 210 can be elastically deformed. Suitably, the carrier is sufficiently thick so that the deformation required to insert it into the hole does not result in plastic deformation of the carrier 210.

Each of the first and second strain sensors 502 and 504 can be implemented by means of one or more strain gauges. Strain gauges are well known in the art. The strain gauge is to be subjected to the same compressive and expanding forces that cause the strain in the material of the physical body to be sensed. The strain gauge is therefore affixed to the physical body, e.g., by means of gluing the strain gauge directly on the physical

body, or indirectly by means of gluing the strain gauge on an intermediate object that itself is rigidly attached to the physical body. In the invention, the carrier 210 forms the intermediate object. The first and second strain sensors 502 and 504 are glued to the inner surface 208 of the carrier 210. The outer surface 214 of the carrier 210 is glued to the wall of the hole into which the carrier 210 is inserted.

Assume that the carrier 210, which accommodates the strain sensors 502 and 504, is to be positioned into a hole in a physical object, e.g., a hole in the inner ring 102 or in the outer ring 104 of the rolling element bearing 100. In order to be properly positioned, the carrier 210 needs to be deformed. The carrier 210 comprises clamping means 218 that is configured for controlling an elastic deformation of the carrier 210 by means of compressing the clamping means 218. Operation of the clamping means 218 will now be discussed.

In the embodiment illustrated in Figs 2-5, the clamping means 218 comprises a first lip 220 projecting from the outer surface 214 of the carrier 210 and a second lip 222 projecting from the outer surface 214, at a height 304 above the inner surface 208. The first and second lips 220 and 222 project in first and second directions, respectively, that are substantially perpendicular to the length 302 of the carrier 210. The first lip 220 is formed as a first hook, and the second lip 222 is formed as a second hook. The first and second hooks form a mirror-symmetrical pair in this example. Both the first and second hooks curl inwards towards the inner surface 208 of the carrier 210 and are positioned opposite each other along the width 402 of the carrier 210. Accordingly, one can position a respective jaw of a pair of, e.g., needle-nose pliers into a respective one of the first and second hooks and push the first and second hooks towards each other by squeezing the handles of the needle-nose pliers. As a result, a bending force is applied on the outer surface 214 of the carrier 210 that causes the curvature of the outer surface 214 to increase. The increased curvature reduces the width 402 of the carrier 210 so that there is enough room for the carrier 210 to be moved into the hole without portions of the outer surface touching the hole wall.

The clamping means 218 is preferably formed so that the height 304 of the carrier 210 is smaller than the width 402 of the carrier 210 when the carrier 210 is undeformed. When the clamping means 218 is being pinched together, the magnitude of the height 304 increases. However, since the height 304 of the undeformed carrier 210 is smaller than the width 402 of the undeformed carrier, enough room remains between the wall of the hole and the carrier 210 when the carrier 210 is being deformed and positioned within the hole.

Preferably, the carrier 210 is made by means of subjecting a piece of material to electric discharge machining. The clamping means 218 is then formed as an integral part of the carrier 210. An advantage of electric discharge machining is that there is no residual stress left in the carrier 210. Any residual stress in the carrier 210 may adversely affect a linear response of the first strain sensor 502 and the second strain sensor 504.

As shown in Fig.5, the electric discharge machining of the clamping means creates a plug 506, formed as a spatial complement to a spatial configuration of at least part of the clamping means. As a result, the plug 506 fits neatly in an opening or space defined by the first lip 220, the second lip 222 and the inner surface 208. The plug 506 serves to facilitate mounting the first strain sensor 502 and the second strain sensor 504. First, the first strain sensor 502 and the second strain sensor 504 are attached to a surface of the plug 506 using e.g. double-sided adhesive tape, where the plug surface faces the inner surface 208 in the mounted position of the plug 506. Then, the plug 506 is inserted in the opening with the first strain sensor 502 and the second strain sensor 504 facing the inner surface 208. The first and second strain sensors are preferably glued to the inner surface 208, whereby the plug 506 is pressed against the inner surface of the carrier until the glue has cured. The plug 506 is then removed.

In an embodiment of the device 110 in the invention, the carrier 210 has a spatial configuration that is substantially mirror-symmetrical with respect to a plane substantially perpendicular to the second dimension 402. The intersection of this plane with the carrier 210 is indicated in Fig.4 with a reference numeral 404. The first strain sensor 502

is positioned at a first location on the inner surface 208, and the second strain sensor 504 is positioned at a second location on the inner surface 208. The first and second locations are substantially mirror-symmetrical with respect to the aforesaid plane. For example, as shown in Fig. 5, the inner surface 208 has an area formed as a first curved segment of a first cylindrical surface having an axis that lies in the plane of mirror-symmetry. The outer surface 214 is formed as a second curved segment of a second cylindrical surface co-axial with the first cylindrical surface and having the curvature in the second dimension 402. The first location of the first strain sensor 502 and the second location of the second strain sensor 504 span an angle 508 of substantially 90° on the first cylindrical surface. Accordingly, the first strain sensor 502 and the second strain sensor 504 are mounted inside the clamping means 218 of the carrier 210 and, preferably, at respective locations with an angle of 90° between them as shown in the enclosed cross-section. Calculations based on the finite element method have shown that these locations of the first strain sensor 502 and the second strain sensor 504 correspond to the locations at the carrier 210 where a maximum response can be measured when the carrier is deformed due to a force exerted on the outer surface 214 perpendicular to longitudinal centerline 404 of the carrier.

Preferably, a temperature sensor (not shown) is included in the device 110. For example, a thermocouple is positioned at an opening 224 in the carrier 210. The temperature sensor can be used for compensating the temperature-dependence of the sensor signals from the first strain sensor 502 and the second strain sensor 504. Furthermore, the temperature at the mounted depth of the thermocouple may be a variable of interest in itself.

The rolling element bearing 100 of Fig.1 is drawn as comprising a single device 110 of the invention that is positioned in the outer ring 104. Depending on, e.g., the envisaged phenomena to be measured using strain sensors, and the type of rolling element bearing two or more devices according to the invention can be employed. For example, a configuration of strain sensors is used with the device 110 in the outer ring 104 and another device (not shown) in the inner ring 102 of the rolling element bearing 100. As

another example, the rolling element bearing 100 is implemented as a double-row bearing. The double-row bearing has a first set and a second set of rolling elements disposed between the inner ring 102 and the outer ring 104. The first and second sets are positioned next to each other in the axial direction of the rolling element bearing 100. The device 110 is located in e.g. the outer ring 104 in a hole made in the axial direction at one axial side of the rolling element bearing 100. Another device of the invention (not shown) is located in the outer ring 104 in another hole made in the axial direction at the opposite axial side of the bearing 100. Suitably, the devices are mounted in their respective holes such that the longitudinal centerline 404 of the carrier is directed towards the centre of the bearing and such that the portion of the carrier comprising the strain sensors is positioned opposite a region where rolling contact occurs. The device 110 monitors the strain in the rolling element bearing 100 as a result of a first load exerted via the first set of rolling elements, and the other device according to the invention monitors the strain in the rolling element bearing 100 as a result of a second load exerted via the second set of rolling elements. This configuration enables to monitor whether the load on the rolling element bearing 100 as a whole is equally distributed between the first and second sets of rolling elements. Furthermore, when mounted in a rotating ring of the bearing, the load distribution around the circumference of the bearing, including the precise location of the loaded zone, can be determined.

A number of aspects/embodiments of the invention have been described. It is to be understood that each aspect/embodiment may be combined with any other aspect/embodiment. The invention may thus be varied within the scope of the accompanying patent claims.

CLAIMS

1. A device (110, 210) configured for material-embedded sensing of strain at a location on a wall of a hole in a physical object (100), the device comprising:
a strain sensor (502) for sensing the strain;
a carrier (210) configured for being inserted into the hole along a first dimension (302) of the carrier;
wherein:
the carrier has an inner surface (208) accommodating the strain sensor;
the carrier has an outer surface (214) with a curvature in a second dimension (402) which is substantially perpendicular to the first dimension and which matches a further curvature of the hole wall; and
the carrier is substantially elastically deformable in the second dimension.

2. The device of claim 1, wherein the carrier comprises clamping means (218) configured for controlling an elastic deformation of the carrier by means of compressing the clamping means.

3. The device of claim 2, wherein:
the clamping means comprises a first lip (220) and a second lip (222) projecting from the outer surface (214) of the carrier (214);
the first lip and the second lip extend in a plane substantially perpendicular to the first dimension (302);
the first lip and the second lip are positioned opposite one another in the second dimension; and
each of the first lip and the second lip curls towards the inner surface (208) of the carrier.

4. The device of any preceding claim, wherein:
the carrier has a spatial configuration that is substantially mirror-symmetrical with respect to a plane substantially perpendicular to the second dimension (402);
the device comprises a further strain sensor (504);
the strain sensor (502) is positioned at a first location on the inner surface (208) of the carrier;
the further strain sensor (504) is positioned at a second location on the inner surface; and
the first and second locations are substantially mirror-symmetrical with respect to said plane.

5. The device of claim 4, wherein:
the inner surface has an area formed as a first curved segment of a first cylindrical surface having an axis that lies in the plane substantially perpendicular to the second dimension (402);
the outer surface is formed as a second curved segment of a second cylindrical surface co-axial with the first cylindrical surface;
the strain sensor (502) is positioned at a first location in the area;
the further strain sensor (504) is positioned at a second location in the area;
the first and second locations span an angle of substantially 90° on the first cylindrical surface.

6. The device of any preceding claim, wherein:
the device has a maximum height in a third dimension (304), substantially perpendicular to the first dimension (302) of the carrier and to the second dimension (402) of the carrier, when the carrier is undeformed; and
the maximum height is smaller than a maximum width of the device in the second dimension when the carrier is undeformed.

7. The device of any preceding claim, further comprising a temperature sensor.

8. The device of any preceding claim, wherein the carrier is made using electric discharge machining.

9. A carrier (210) configured for being inserted along a first dimension (302) of the carrier into a hole in a physical object (100);
the carrier has an inner surface (208) for accommodating a strain sensor (502);
the carrier has an outer surface (214) with a curvature in a second dimension (402) substantially perpendicular to the first dimension, the curvature of the outer surface corresponding to a further curvature of the hole;
the carrier is substantially elastically deformable in the second dimension;
the carrier comprises clamping means (218) configured for controlling an elastic deformation of the carrier by means of compressing the clamping means;
the clamping means comprises a first lip (220) projecting from the outer surface and a second lip (222) projecting from the outer surface;
the first lip and the second lip extend in a plane substantially perpendicular to the first dimension;
the first lip and the second lip are positioned opposite one another in the second dimension; and
each of the first lip and the second lip curls towards the inner surface of the carrier.

10. The carrier of claim 9, combined with a plug (506) that is formed as a spatial complement to a spatial configuration of at least part of the clamping means so as to fit a space defined by the first lip, the second lip and the inner surface.

11. A physical object (100) with a hole that accommodates a device (110) configured for material-embedded sensing of strain at a location on a wall of the hole, wherein:
the device comprises a strain sensor (502) for sensing the strain;
the device comprises a carrier (210) inserted into the hole along a first dimension (302) of the carrier;
the carrier has an inner surface (208) accommodating the strain sensor;
the carrier has an outer surface (214) with a curvature in a second dimension (402) substantially perpendicular to the first dimension, the curvature of the outer surface corresponding to a further curvature of the hole; and
the carrier is substantially elastically deformable in the second dimension.

12. The physical object of claim 11, comprising a rolling element bearing with an inner ring (102) and an outer ring (104), wherein the hole extends in an axial direction in one of the inner ring or the outer ring.

13. A method for positioning within a hole, made in a physical object (100), a device (110) configured for material-embedded sensing of strain at a location on a wall of the hole, wherein:
the device comprises a carrier (210) accommodating a strain sensor (502) on an inner surface (208) of the carrier;
the carrier has a first dimension (302) and a second dimension (402) substantially perpendicular to the first dimension;
the carrier has an outer surface (214) with a curvature in the second dimension;
the curvature matches a further curvature of the hole;
the carrier is substantially elastically deformable in the second dimension; and
the method comprises elastically deforming the carrier along the second dimension for inserting the device into the hole.

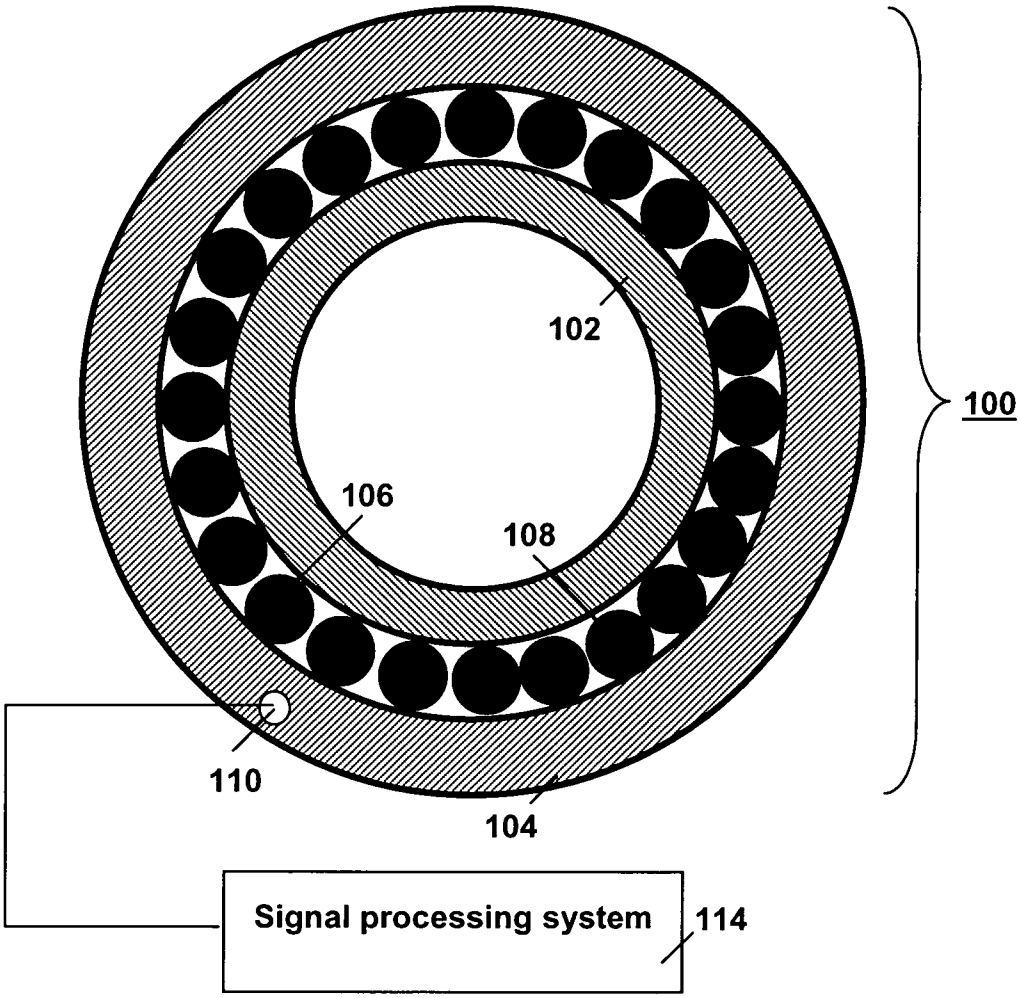

Fig.1

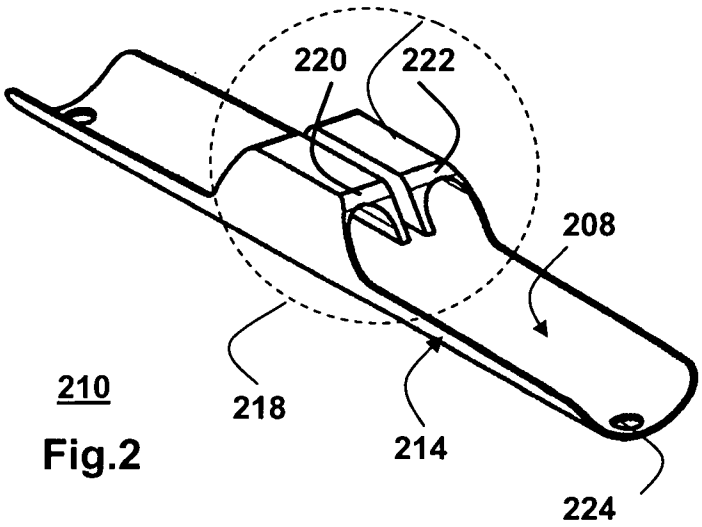

Fig.2

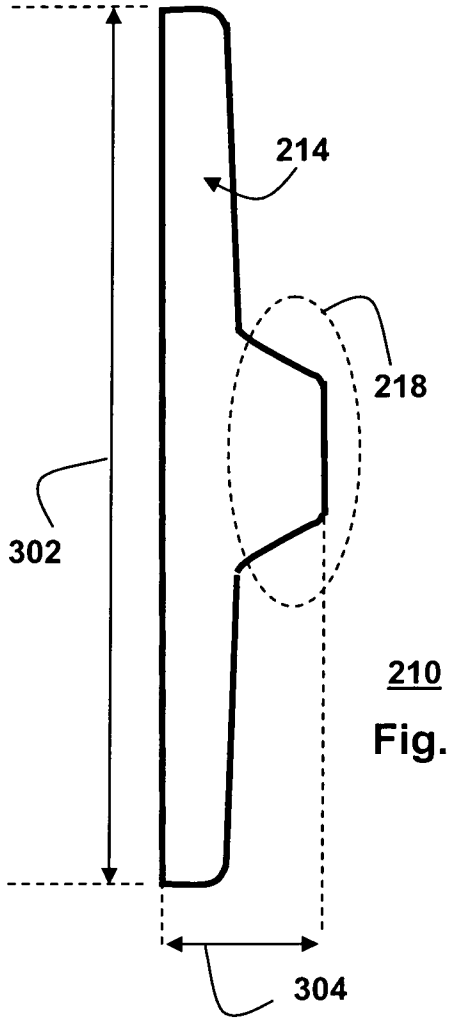

Fig.3

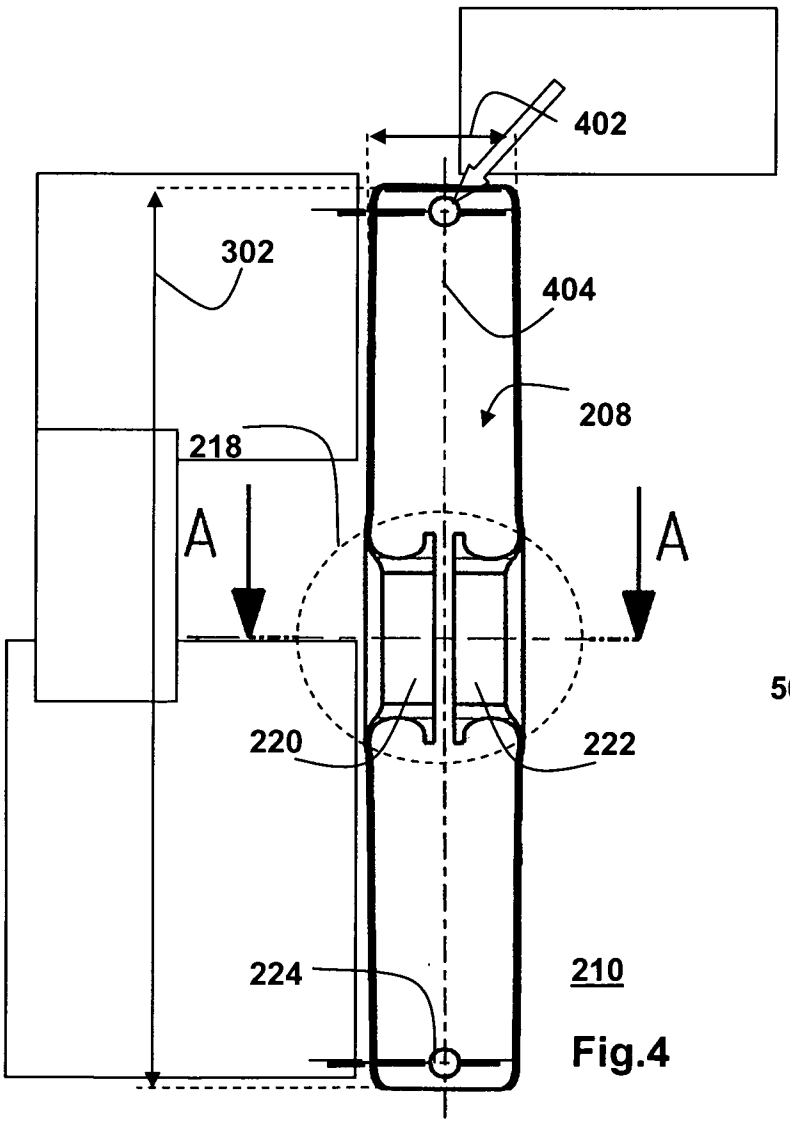

Fig.4

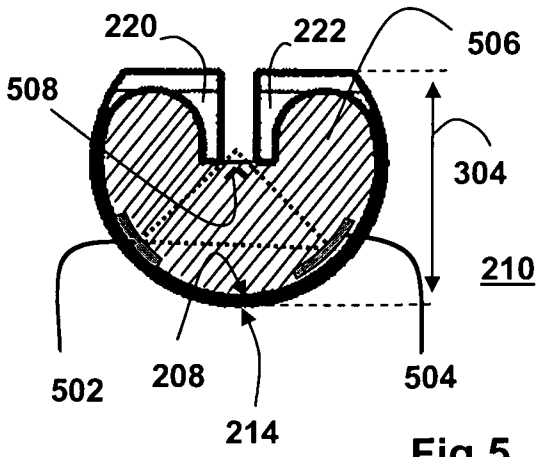

Fig.5

INTERNATIONAL SEARCH REPORT

International application No
PCT/EP2010/006356

A. CLASSIFICATION OF SUBJECT MATTER
INV. G01L5/00
ADD.

According to International Patent Classification (IPC) or to both national classification and IPC

B. FIELDS SEARCHED

Minimum documentation searched (classification system followed by classification symbols)
G01L

Documentation searched other than minimum documentation to the extent that such documents are included in the fields searched

Electronic data base consulted during the international search (name of data base and, where practical, search terms used)
EPO-Internal, WPI Data

C. DOCUMENTS CONSIDERED TO BE RELEVANT

Category*	Citation of document, with indication, where appropriate, of the relevant passages	Relevant to claim No.
X A	US 2008/011085 A1 (VIK TIMOTHY A [US] ET AL) 17 January 2008 (2008-01-17) * abstract figures 2,3 paragraph [0008] - paragraph [0009] paragraph [0019] - paragraph [0029] -----	1,2,4-8, 11-13 9
A	EP 0 504 676 A1 (STRAINTEC AG [CH]) 23 September 1992 (1992-09-23) * abstract column 1, line 31 - column 2, line 42 figure 1 ----- -/--	1,2,4,5, 9,11,13

[X] Further documents are listed in the continuation of Box C.

[X] See patent family annex.

* Special categories of cited documents :

"A" document defining the general state of the art which is not considered to be of particular relevance

"E" earlier document but published on or after the international filing date

"L" document which may throw doubts on priority claim(s) or which is cited to establish the publication date of another citation or other special reason (as specified)

"O" document referring to an oral disclosure, use, exhibition or other means

"P" document published prior to the international filing date but later than the priority date claimed

"T" later document published after the international filing date or priority date and not in conflict with the application but cited to understand the principle or theory underlying the invention

"X" document of particular relevance; the claimed invention cannot be considered novel or cannot be considered to involve an inventive step when the document is taken alone

"Y" document of particular relevance; the claimed invention cannot be considered to involve an inventive step when the document is combined with one or more other such documents, such combination being obvious to a person skilled in the art.

"&" document member of the same patent family

Date of the actual completion of the international search	Date of mailing of the international search report
25 January 2011	01/02/2011

Name and mailing address of the ISA/	Authorized officer
European Patent Office, P.B. 5818 Patentlaan 2 NL - 2280 HV Rijswijk Tel. (+31-70) 340-2040, Fax: (+31-70) 340-3016	Hallbäck, Ann-Sofie

INTERNATIONAL SEARCH REPORT

International application No
PCT/EP2010/006356

C(Continuation). DOCUMENTS CONSIDERED TO BE RELEVANT

Category*	Citation of document, with indication, where appropriate, of the relevant passages	Relevant to claim No.
A	WO 01/23862 A1 (TIMKEN CO [US]; JOKI MARK A [US]; LINDSAY KENNETH W [US]) 5 April 2001 (2001-04-05) * abstract page 2 - page 4 page 7 figures 1,2	1,7
A	EP 1 143 230 A2 (HERA ROTTERDAM B V [NL] BAUMER HOLDING AG [CH]) 10 October 2001 (2001-10-10) * abstract paragraph [0001] - paragraph [0020] figures 1,2	1,2,13
A	EP 0 637 734 A1 (SKF AB [SE]) 8 February 1995 (1995-02-08) * abstract column 1, line 1 - column 3, line 34 figures 1,2	1,11,13
A	JP 2007 024073 A (JTEKT CORP) 1 February 2007 (2007-02-01) the whole document	1,9,11, 13
A	EP 1 403 628 A2 (JAPAN ELECTRONICS IND LTD [JP]) 31 March 2004 (2004-03-31) * abstract paragraph [0031] - paragraph [0057] figures 5-8,18-24	1,4,9, 11,13

INTERNATIONAL SEARCH REPORT

Information on patent family members

International application No
PCT/EP2010/006356

Patent document cited in search report	Publication date	Patent family member(s)	Publication date
US 2008011085 A1	17-01-2008	DE 112007001567 T5	07-05-2009
		WO 2008005077 A1	10-01-2008
EP 0504676 A1	23-09-1992	AT 121540 T	15-05-1995
		CH 681746 A5	14-05-1993
		DE 59201937 D1	24-05-1995
		JP 5072058 A	23-03-1993
		US 5284062 A	08-02-1994
WO 0123862 A1	05-04-2001	US 6490935 B1	10-12-2002
EP 1143230 A2	10-10-2001	CH 694926 A5	15-09-2005
EP 0637734 A1	08-02-1995	DE 69412390 D1	17-09-1998
		DE 69412390 T2	28-10-1999
		JP 2511841 B2	03-07-1996
		JP 7077218 A	20-03-1995
		SE 501814 C2	22-05-1995
		SE 9302576 A	07-02-1995
		US 5503030 A	02-04-1996
JP 2007024073 A	01-02-2007	NONE	
EP 1403628 A2	31-03-2004	NONE	