Feb. 19, 1963 E. O. DU BUIS ET AL 3,077,725

DOFFING AND DONNING MACHINE

Filed Nov. 15, 1961 22 Sheets-Sheet 1

Fig. 1

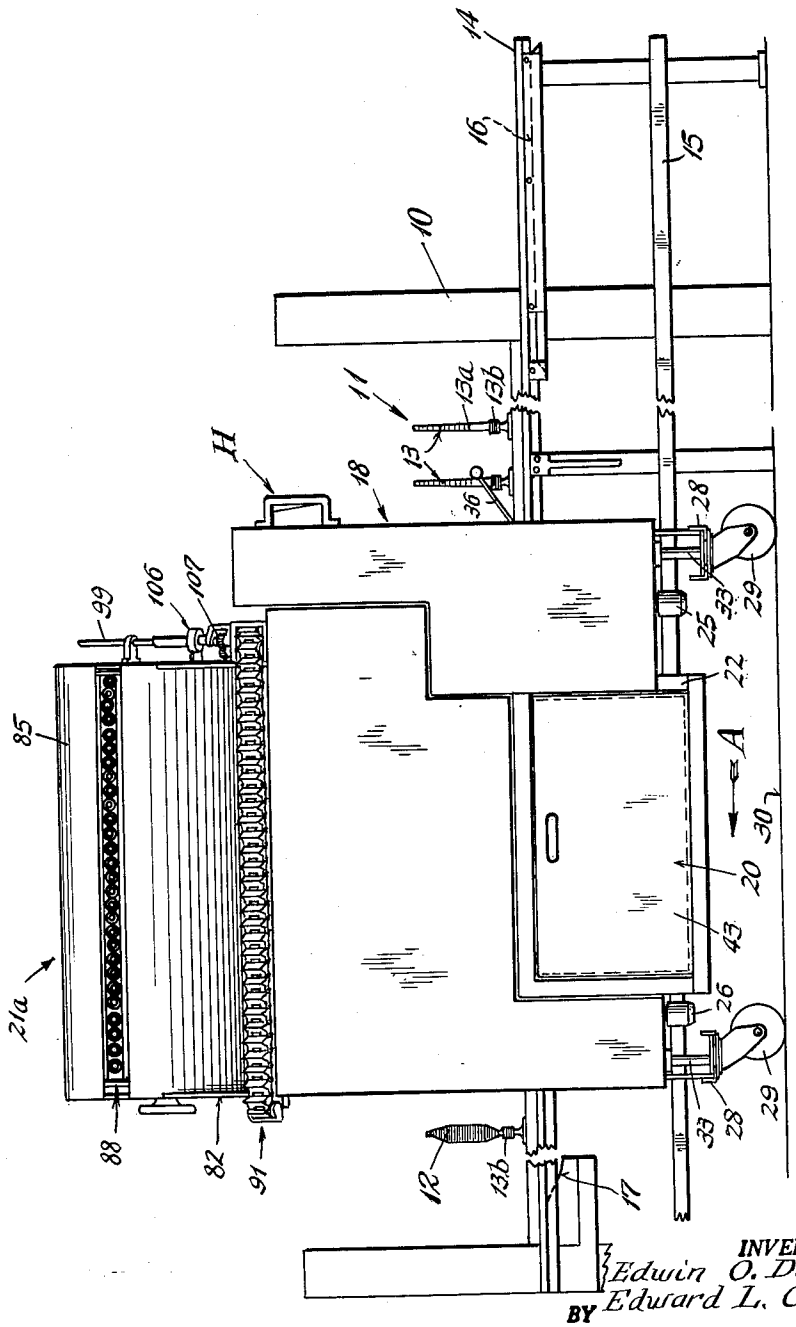

INVENTORS
Edwin O. DuBuis
Edward L. Cucksey

BY Johnson and Kline

ATTORNEYS

Feb. 19, 1963 E. O. DU BUIS ET AL 3,077,725

DOFFING AND DONNING MACHINE

Filed Nov. 15, 1961 22 Sheets-Sheet 2

Fig. 2

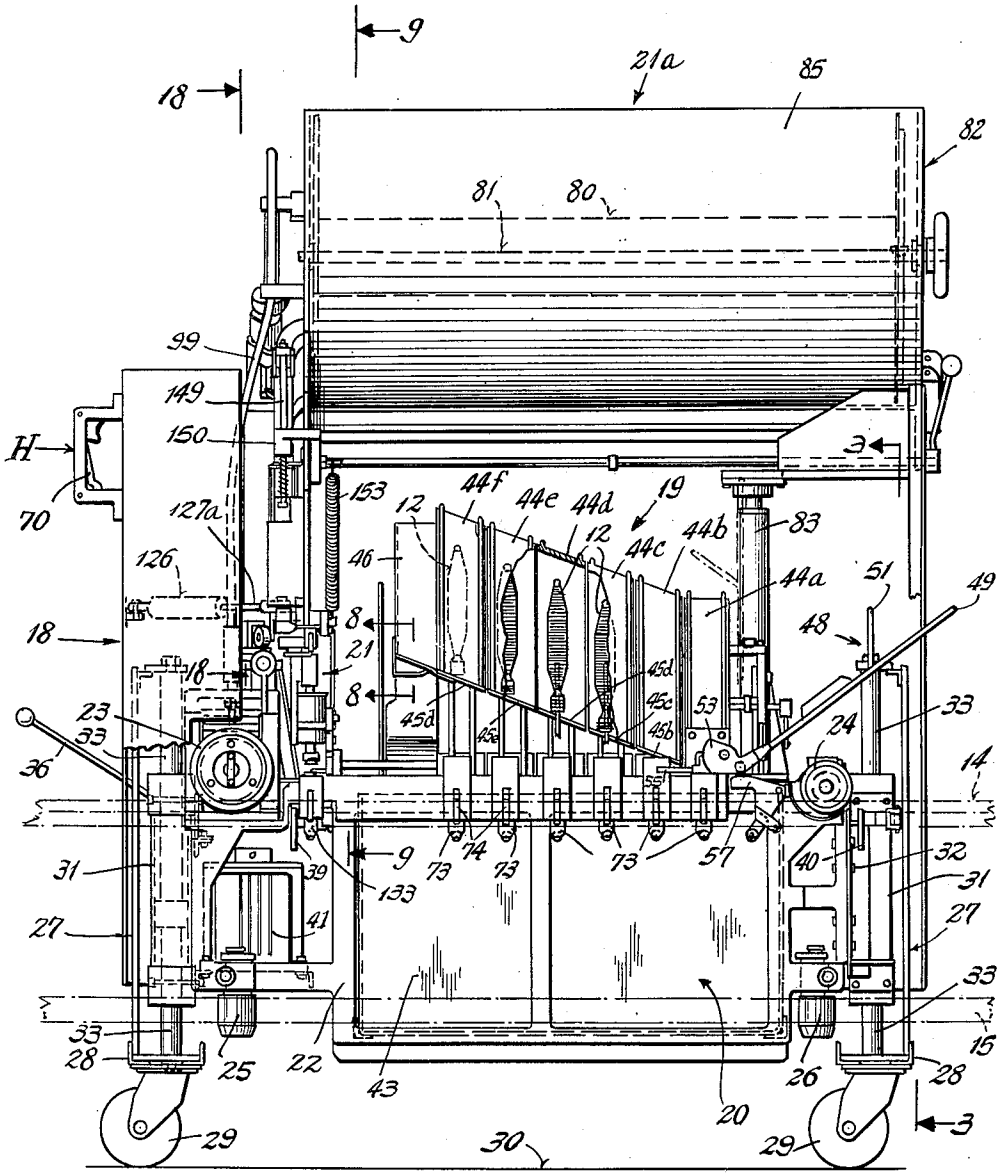

INVENTORS
Edwin O. DuBuis
Edward L. Cucksey
BY
Johnson and Kline
ATTORNEYS

Feb. 19, 1963 E. O. DU BUIS ET AL 3,077,725

DOFFING AND DONNING MACHINE

Filed Nov. 15, 1961 22 Sheets-Sheet 3

Fig. 3

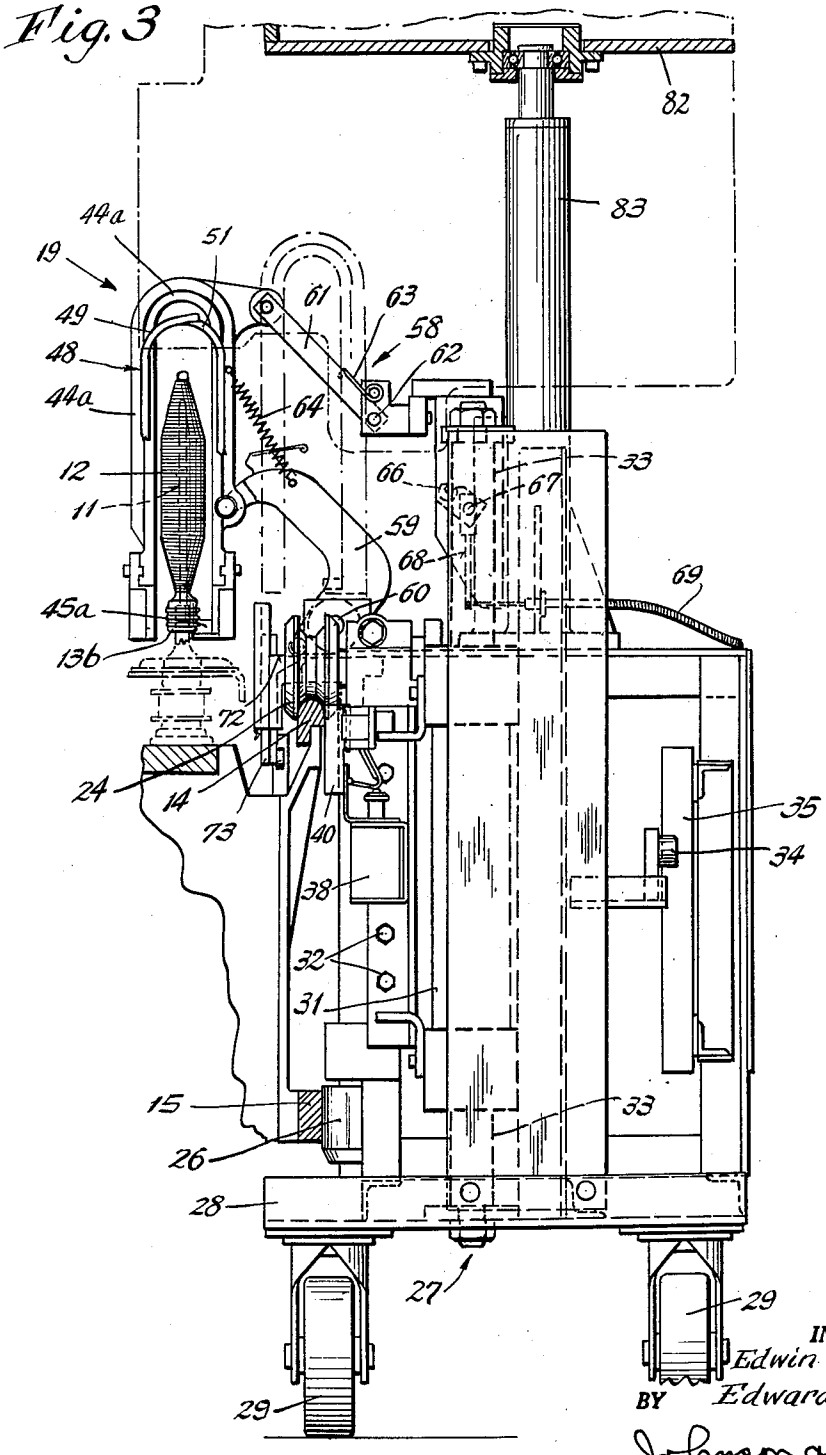

INVENTORS
Edwin O. DuBuis
Edward L. Cucksey
BY Johnson and Kline
ATTORNEYS

Feb. 19, 1963 E. O. DU BUIS ET AL 3,077,725

DOFFING AND DONNING MACHINE

Filed Nov. 15, 1961 22 Sheets-Sheet 4

Fig. 4

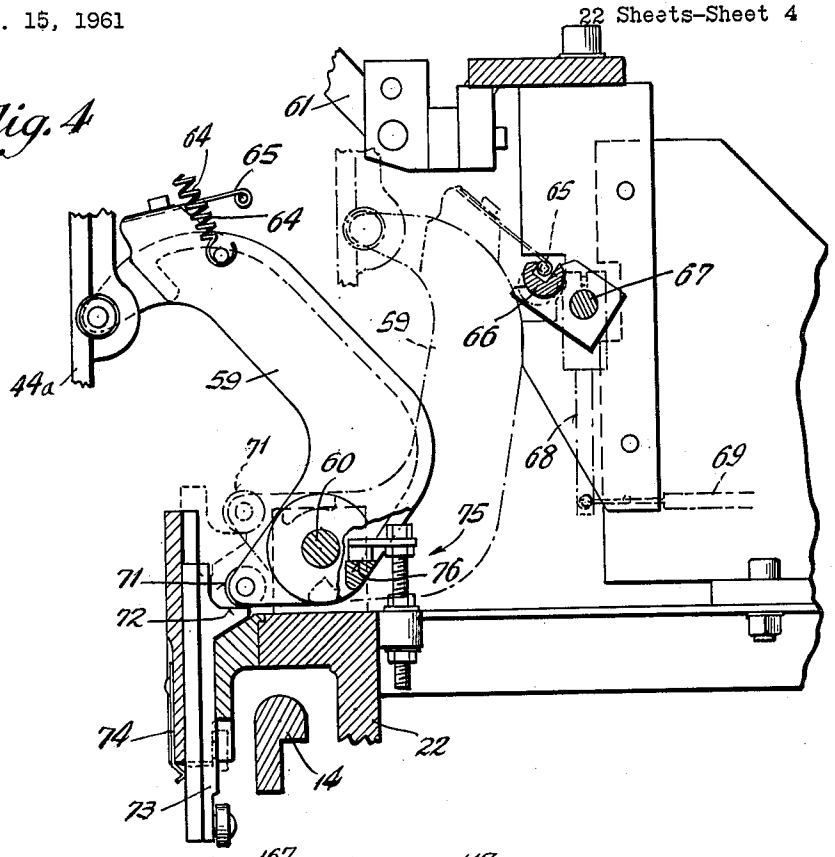

Fig. 29

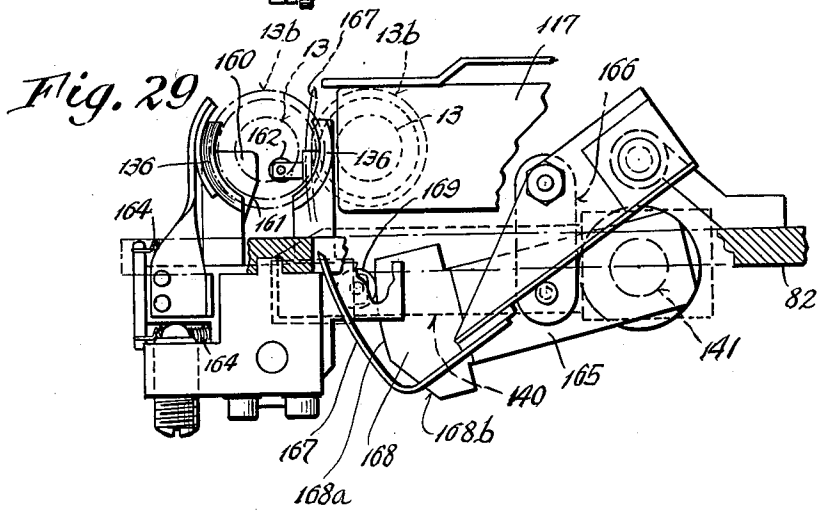

INVENTORS.
Edwin O. DuBuis
Edward L. Cucksey
BY
Johnson and Kline
ATTORNEYS

Feb. 19, 1963 E. O. DU BUIS ET AL 3,077,725

DOFFING AND DONNING MACHINE

Filed Nov. 15, 1961 22 Sheets-Sheet 5

Fig. 17

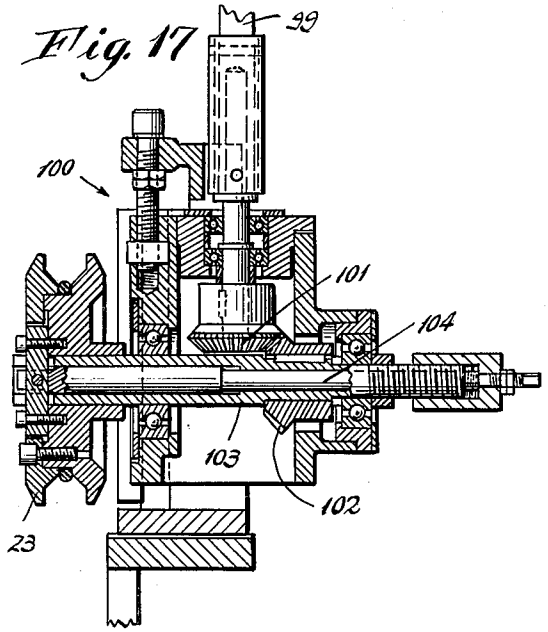

Fig. 16

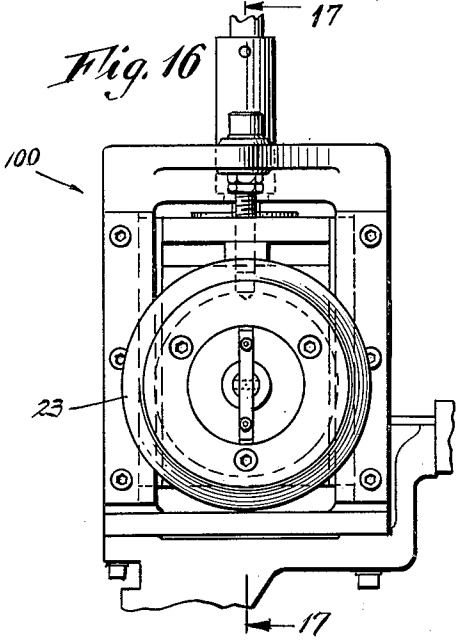

Fig. 7

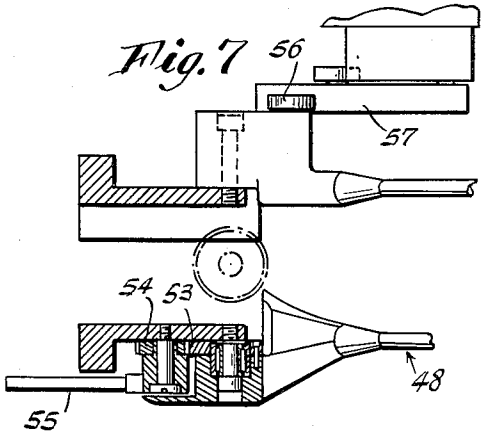

Fig. 5

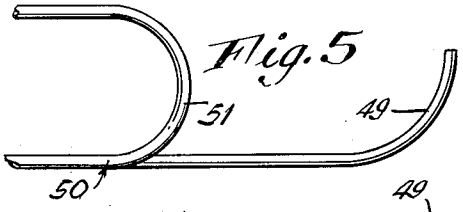

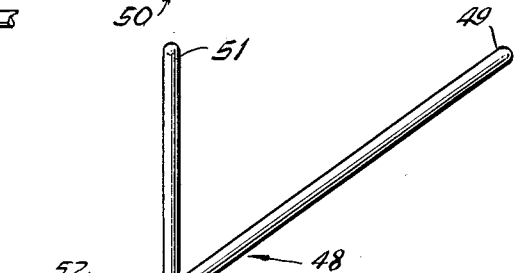

Fig. 6

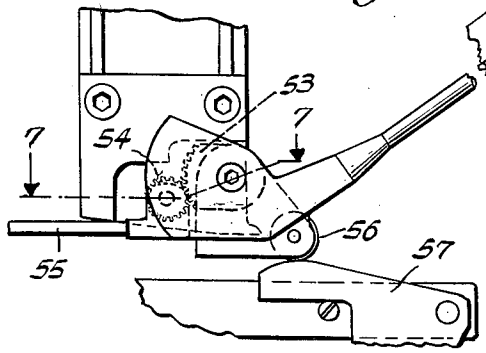

INVENTORS
Edwin O. DuBuis
BY Edward L. Cucksey
Johnson and Kline
ATTORNEYS

Feb. 19, 1963 E. O. DU BUIS ET AL 3,077,725

DOFFING AND DONNING MACHINE

Filed Nov. 15, 1961 22 Sheets-Sheet 6

Fig. 10

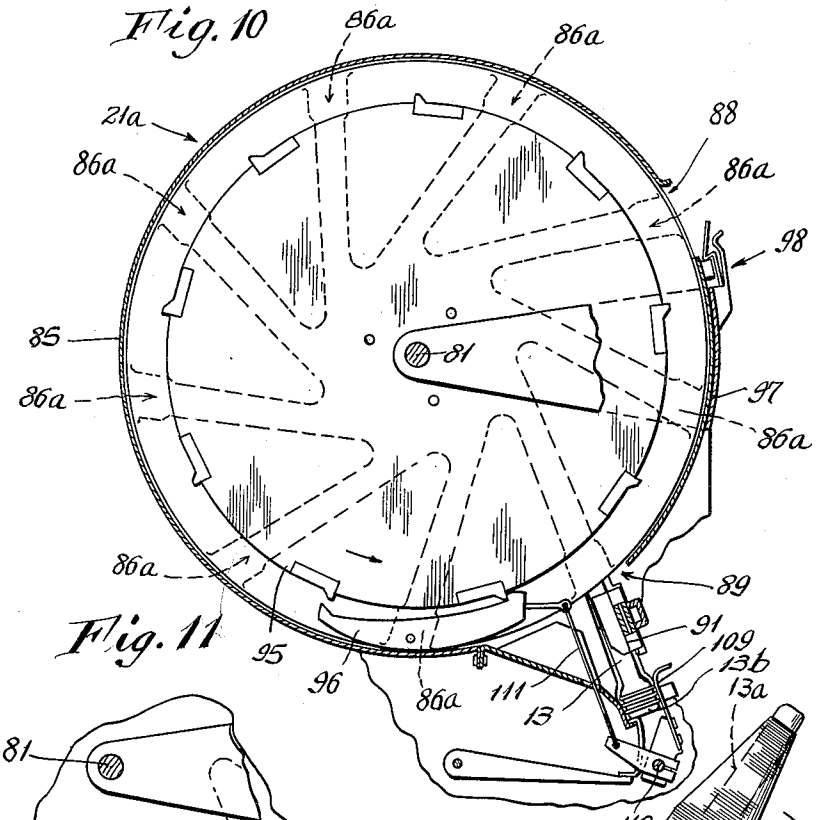

Fig. 11

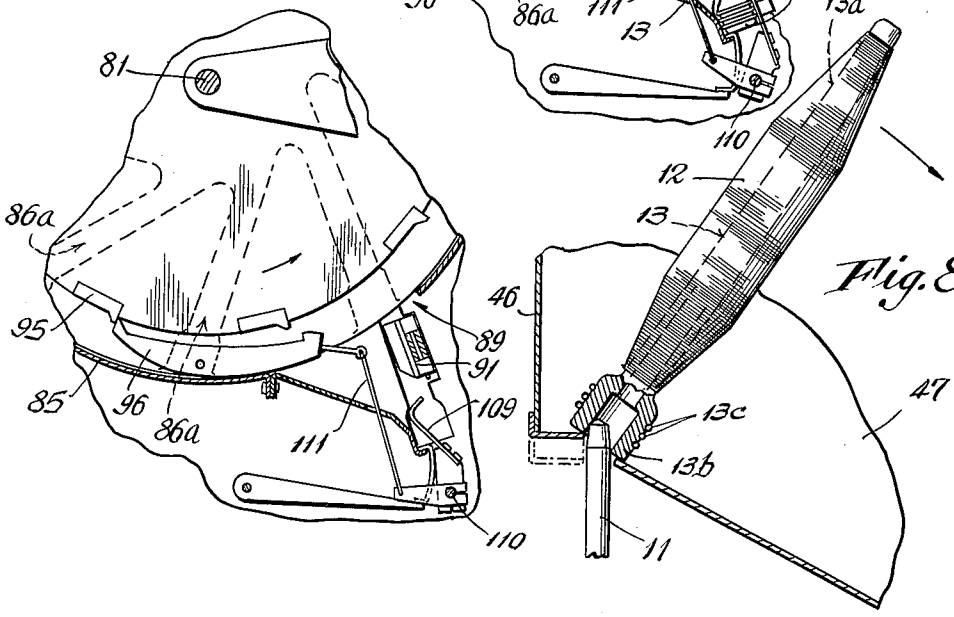

Fig. 8

INVENTORS
Edwin O. DuBuis
BY Edward L. Cucksey

Johnson and Kline
ATTORNEYS

Feb. 19, 1963 E. O. DU BUIS ET AL 3,077,725

DOFFING AND DONNING MACHINE

Filed Nov. 15, 1961 22 Sheets-Sheet 7

Fig. 9

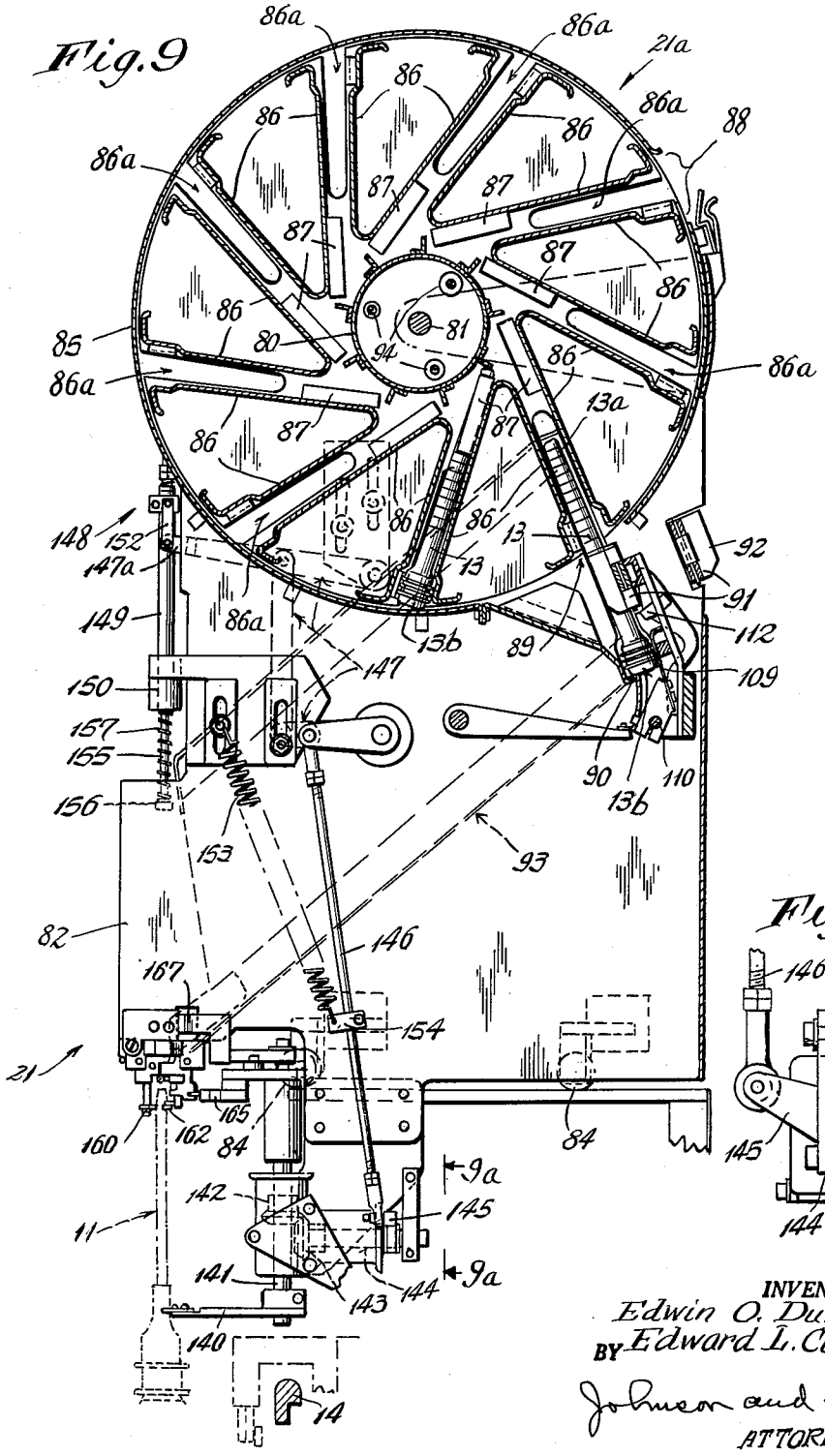

Fig. 9a

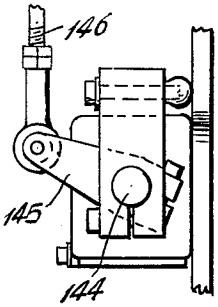

INVENTORS
Edwin O. DuBuis
BY Edward L. Cucksey
Johnson and Kline
ATTORNEYS

Feb. 19, 1963 E. O. DU BUIS ET AL 3,077,725

DOFFING AND DONNING MACHINE

Filed Nov. 15, 1961 22 Sheets-Sheet 8

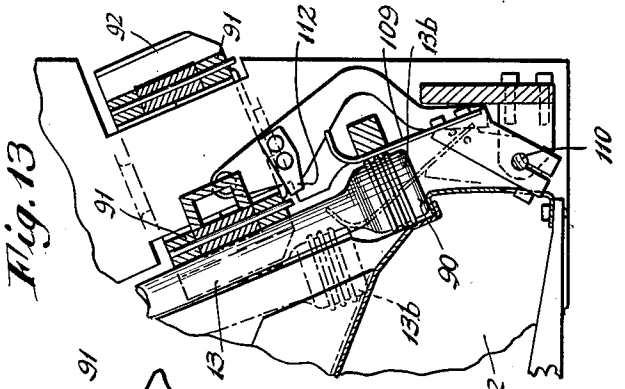

Fig. 13

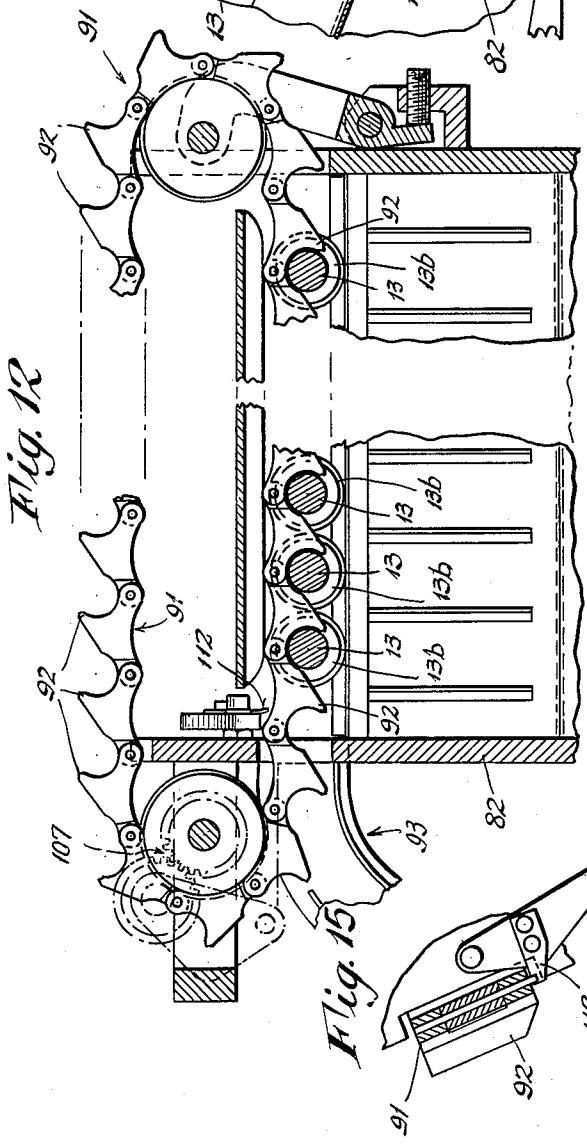

Fig. 12

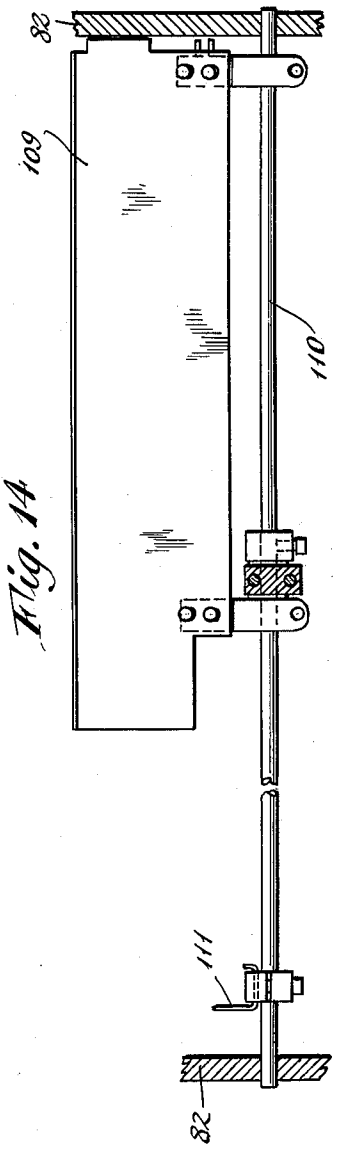

Fig. 14

Fig. 15

INVENTORS
Edwin O. DuBuis
BY Edward L. Cucksey
Johnson and Kline
ATTORNEYS

Feb. 19, 1963 E. O. DU BUIS ET AL 3,077,725

DOFFING AND DONNING MACHINE

Filed Nov. 15, 1961 22 Sheets-Sheet 9

Fig. 18

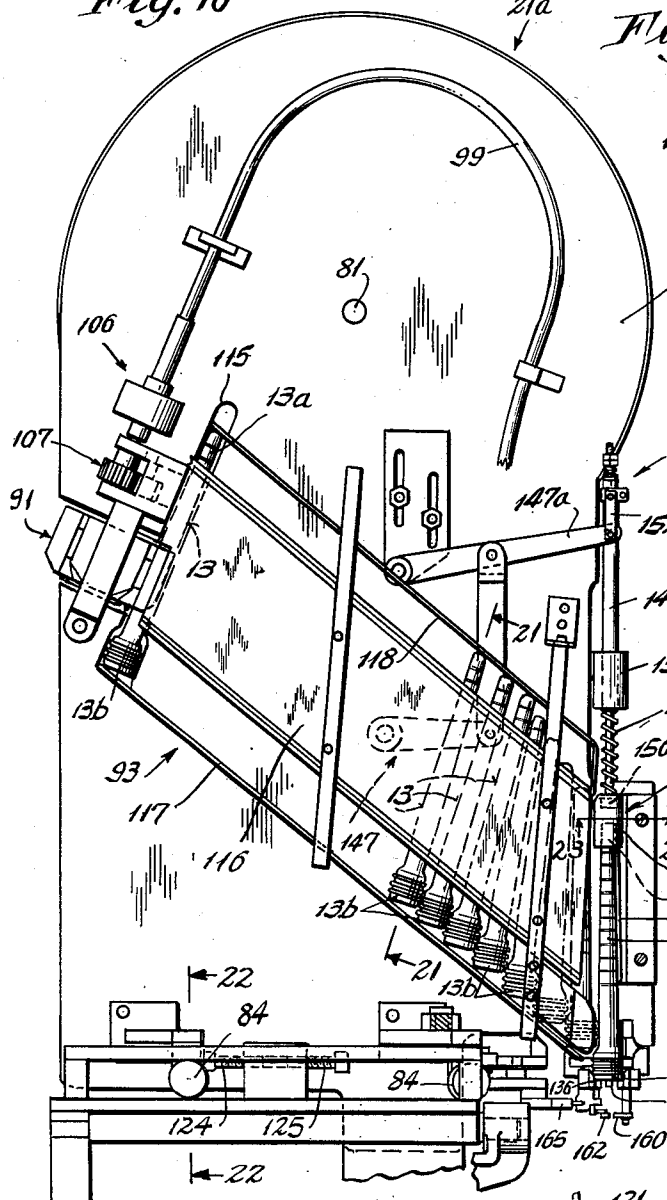

Fig. 20

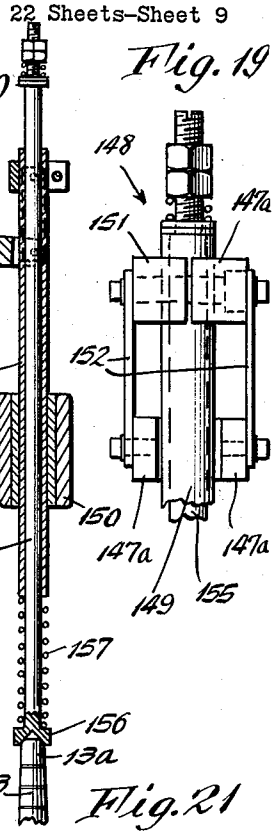

Fig. 19

Fig. 21

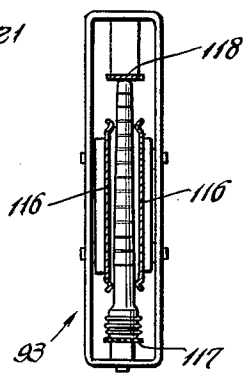

Fig. 22

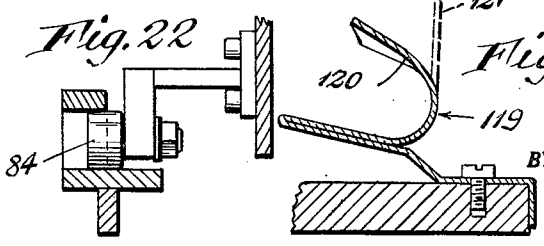

Fig. 23

INVENTORS.
Edwin O. DuBuis
Edward L. Cucksey
BY
Johnson and Kline
ATTORNEYS

Feb. 19, 1963 E. O. DU BUIS ET AL 3,077,725

DOFFING AND DONNING MACHINE

Filed Nov. 15, 1961 22 Sheets-Sheet 10

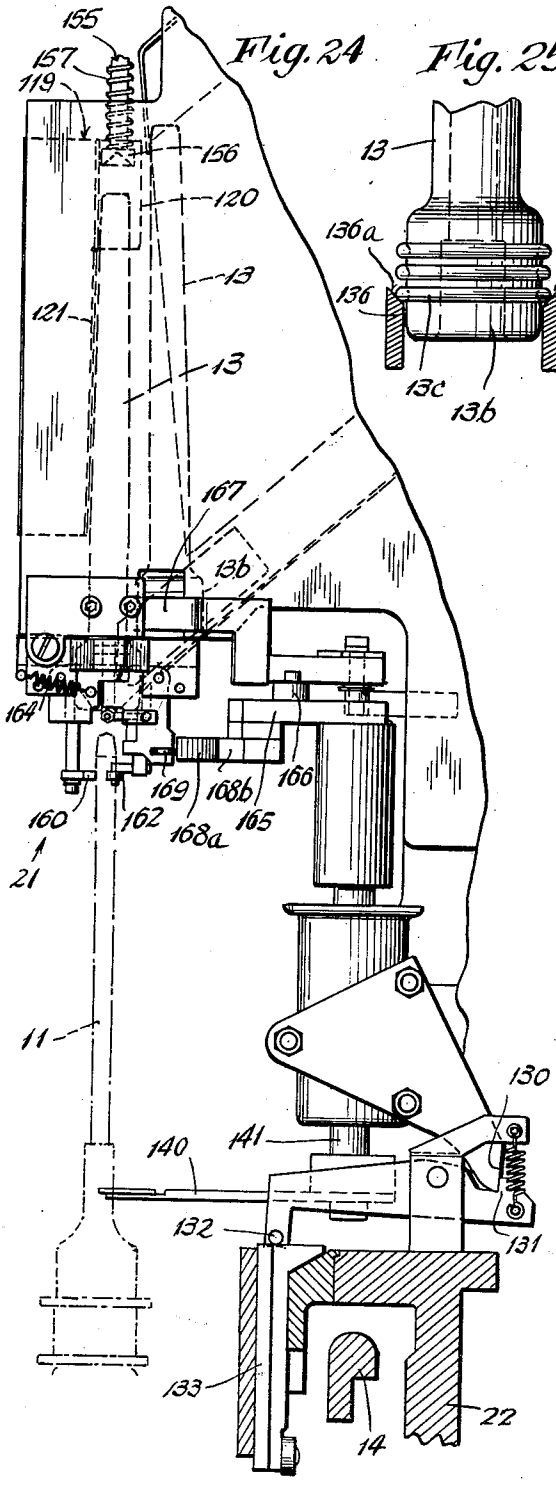

Fig. 24

Fig. 25

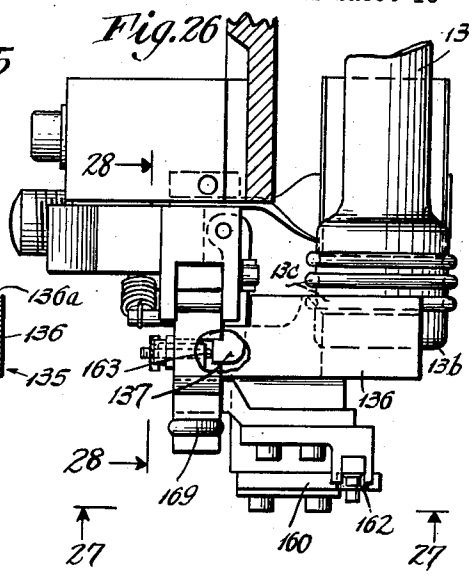

Fig. 26

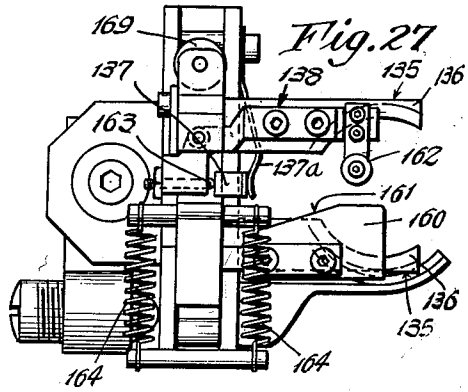

Fig. 27

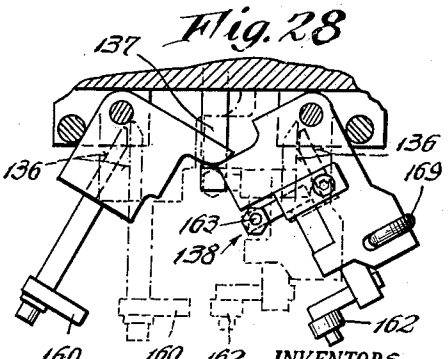

Fig. 28

INVENTORS
Edwin O. DuBuis
BY Edward L. Cucksey
Johnson and Kline
ATTORNEYS

Feb. 19, 1963 E. O. DU BUIS ET AL 3,077,725

DOFFING AND DONNING MACHINE

Filed Nov. 15, 1961 22 Sheets-Sheet 11

Fig. 30

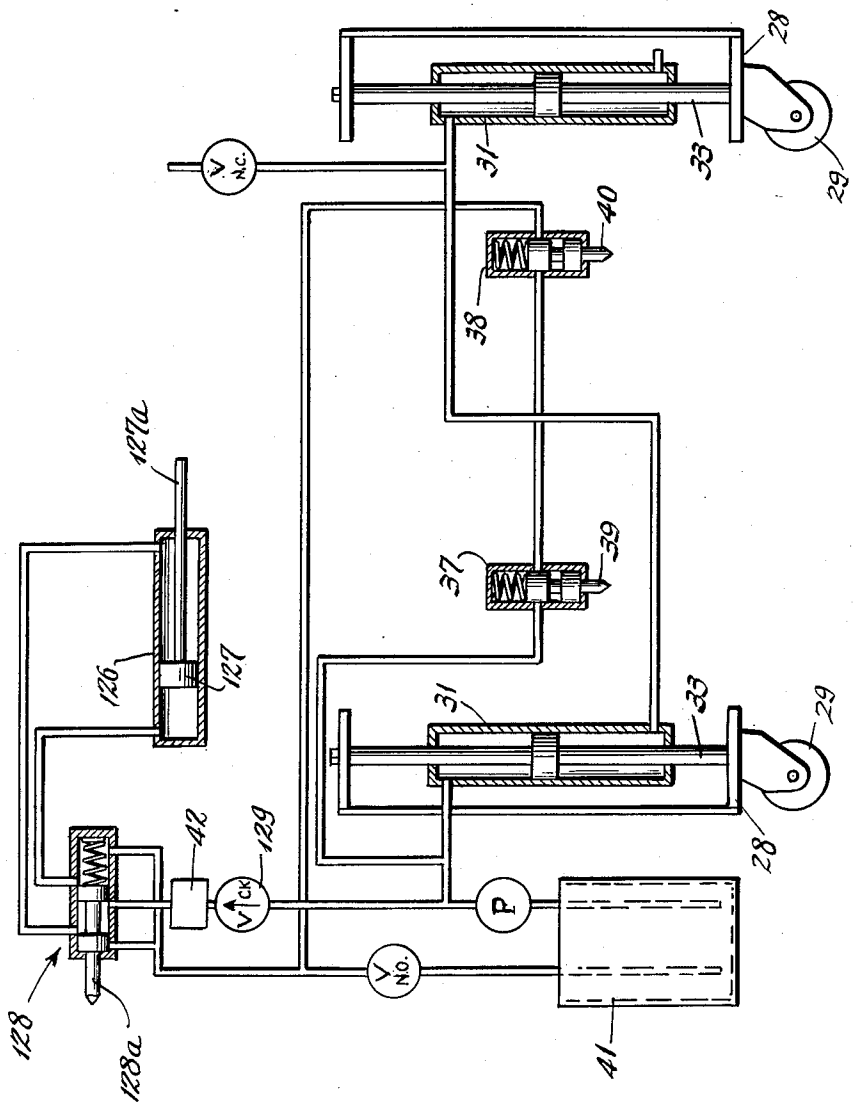

INVENTORS.
Edwin O. DuBuis
Edward L. Cucksey
BY
Johnson and Kline
ATTORNEYS

Feb. 19, 1963 E. O. DU BUIS ET AL 3,077,725

DOFFING AND DONNING MACHINE

Filed Nov. 15, 1961 22 Sheets-Sheet 12

Fig. 31

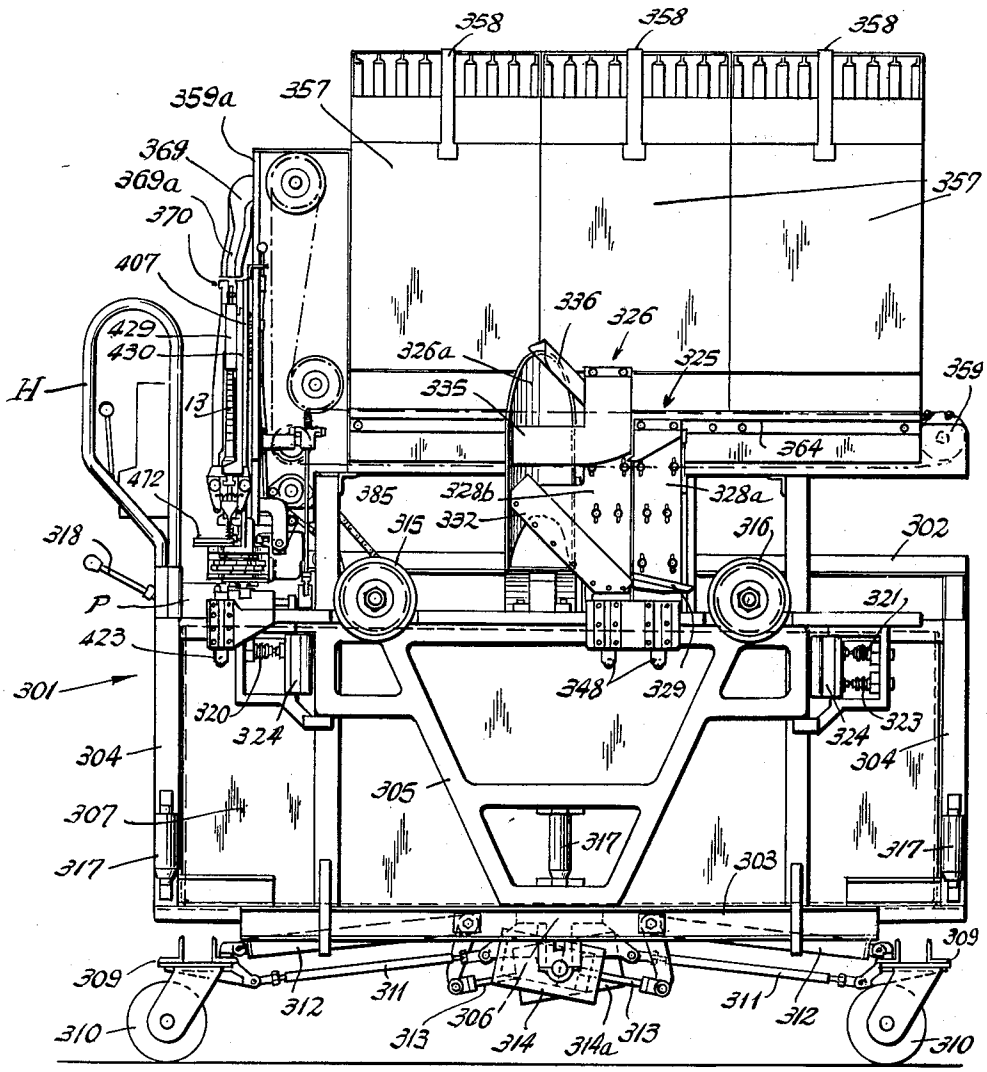

INVENTORS
Edwin O. DuBuis
BY Edward L. Cucksey
Johnson and Kline
ATTORNEYS

Feb. 19, 1963 E. O. DU BUIS ET AL 3,077,725

DOFFING AND DONNING MACHINE

Filed Nov. 15, 1961 22 Sheets-Sheet 13

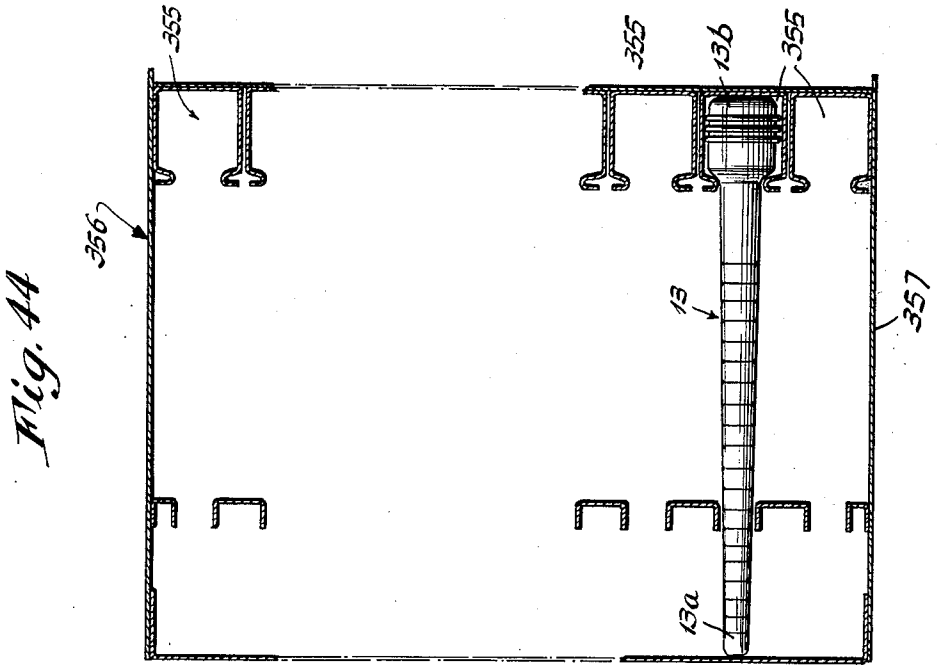

Fig. 44

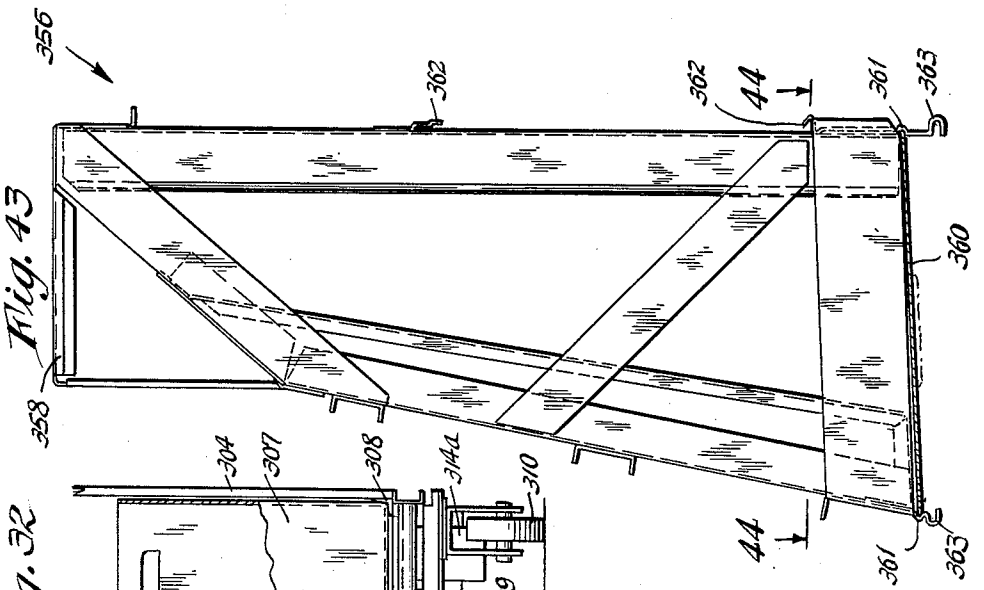

Fig. 43

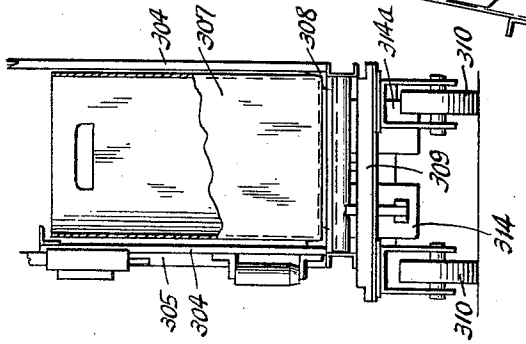

Fig. 32

INVENTORS
Edwin O. DuBuis
Edward L. Cucksey
BY
Johnson and Kline
ATTORNEYS

Feb. 19, 1963 E. O. DU BUIS ET AL 3,077,725

DOFFING AND DONNING MACHINE

Filed Nov. 15, 1961 22 Sheets-Sheet 14

Fig. 34

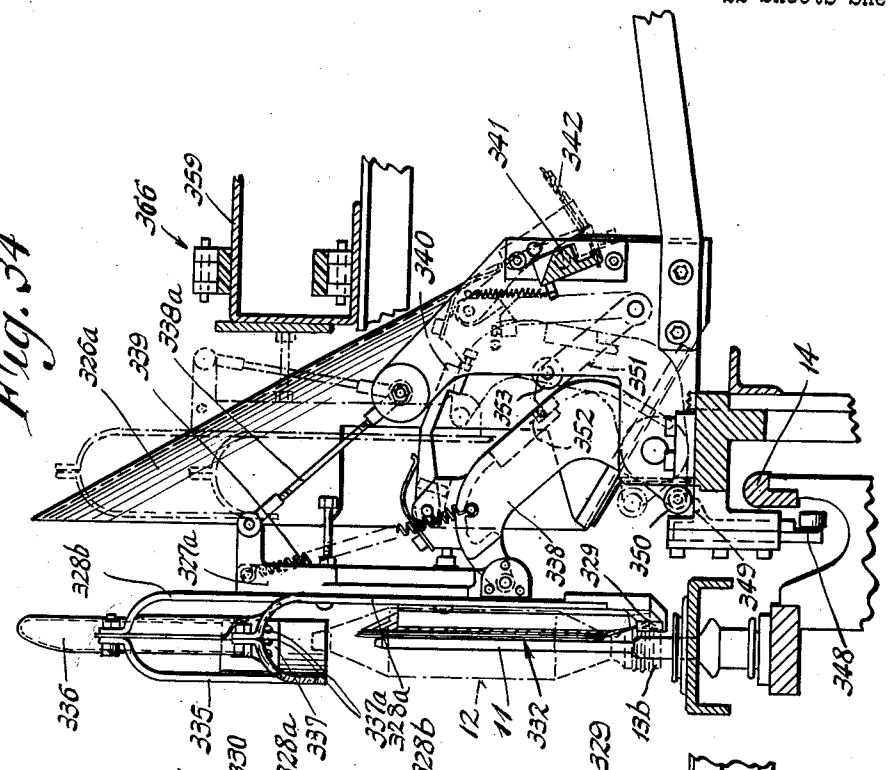

Fig. 33

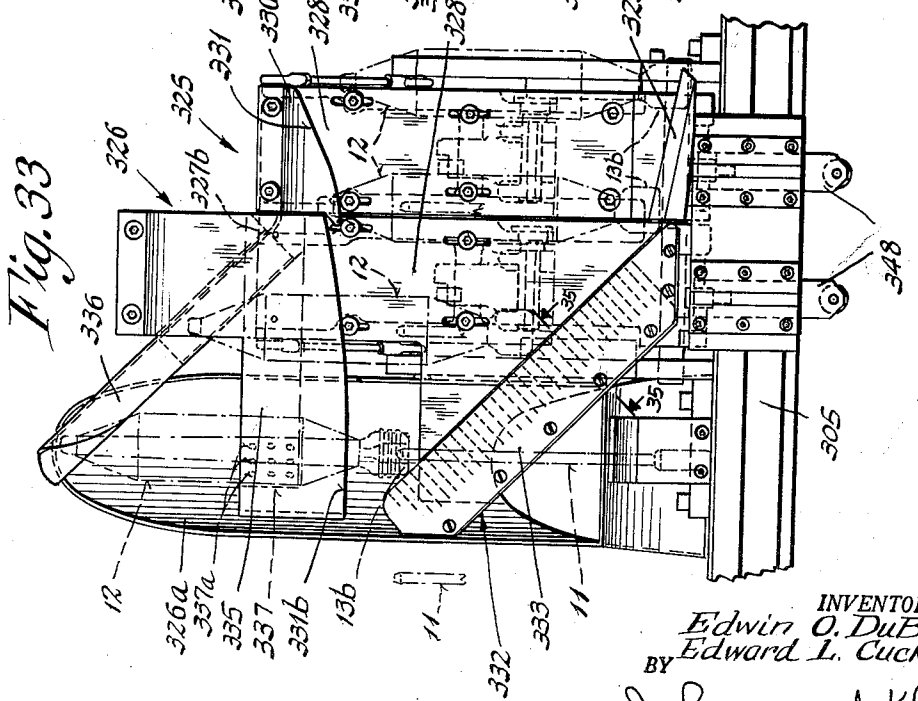

INVENTORS
Edwin O. DuBuis
Edward L. Cucksey
BY
Johnson and Kline
ATTORNEYS

Feb. 19, 1963 E. O. DU BUIS ET AL 3,077,725

DOFFING AND DONNING MACHINE

Filed Nov. 15, 1961 22 Sheets-Sheet 15

Fig. 40

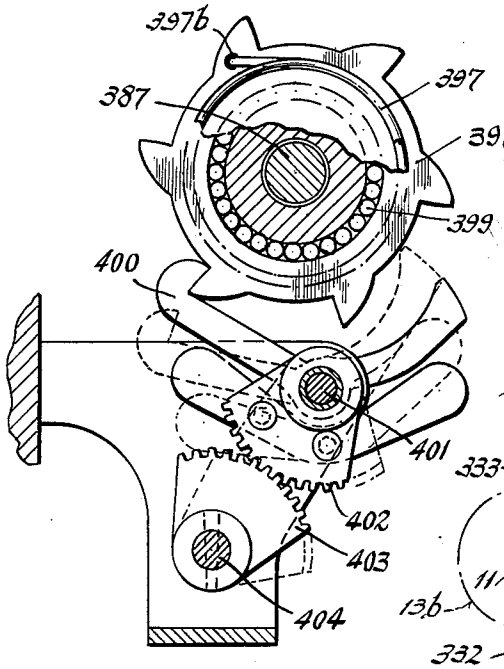

Fig. 41

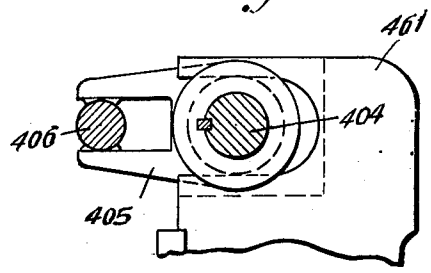

Fig. 36

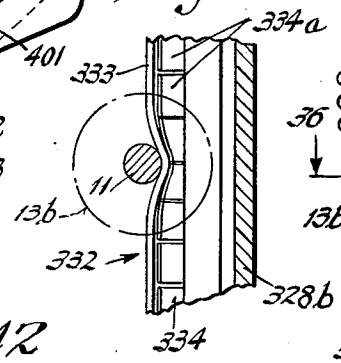

Fig. 35

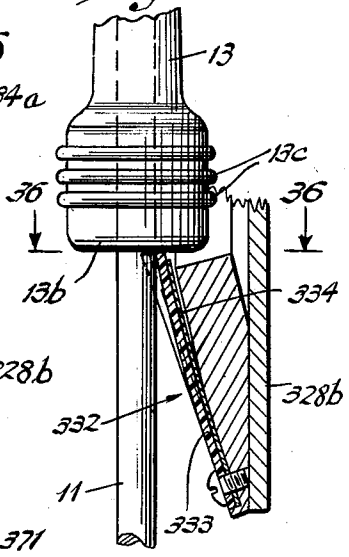

Fig. 42

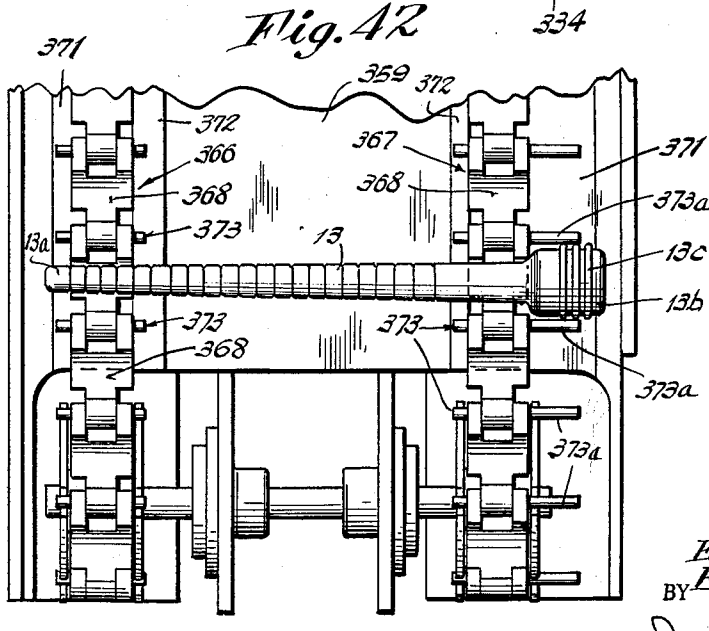

INVENTORS
Edwin O. DuBuis
BY Edward L. Cucksey
Johnson and Kline
ATTORNEYS

Feb. 19, 1963 E. O. DU BUIS ET AL 3,077,725

DOFFING AND DONNING MACHINE

Filed Nov. 15, 1961 22 Sheets-Sheet 16

Fig. 37

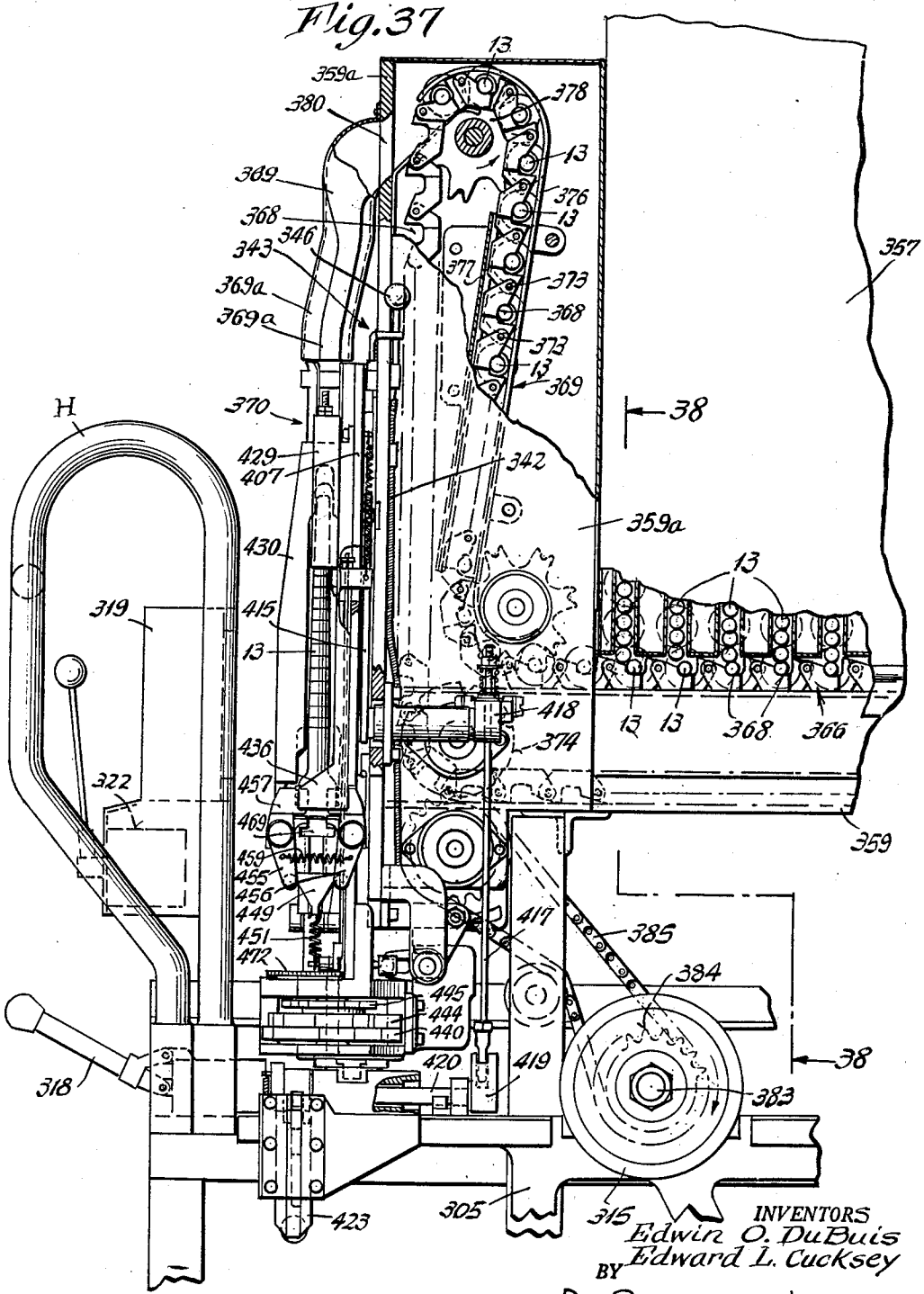

INVENTORS
Edwin O. DuBuis
Edward L. Cucksey
BY Johnson and Kline
ATTORNEYS

Feb. 19, 1963 E. O. DU BUIS ET AL 3,077,725

DOFFING AND DONNING MACHINE

Filed Nov. 15, 1961 22 Sheets-Sheet 17

Fig. 38

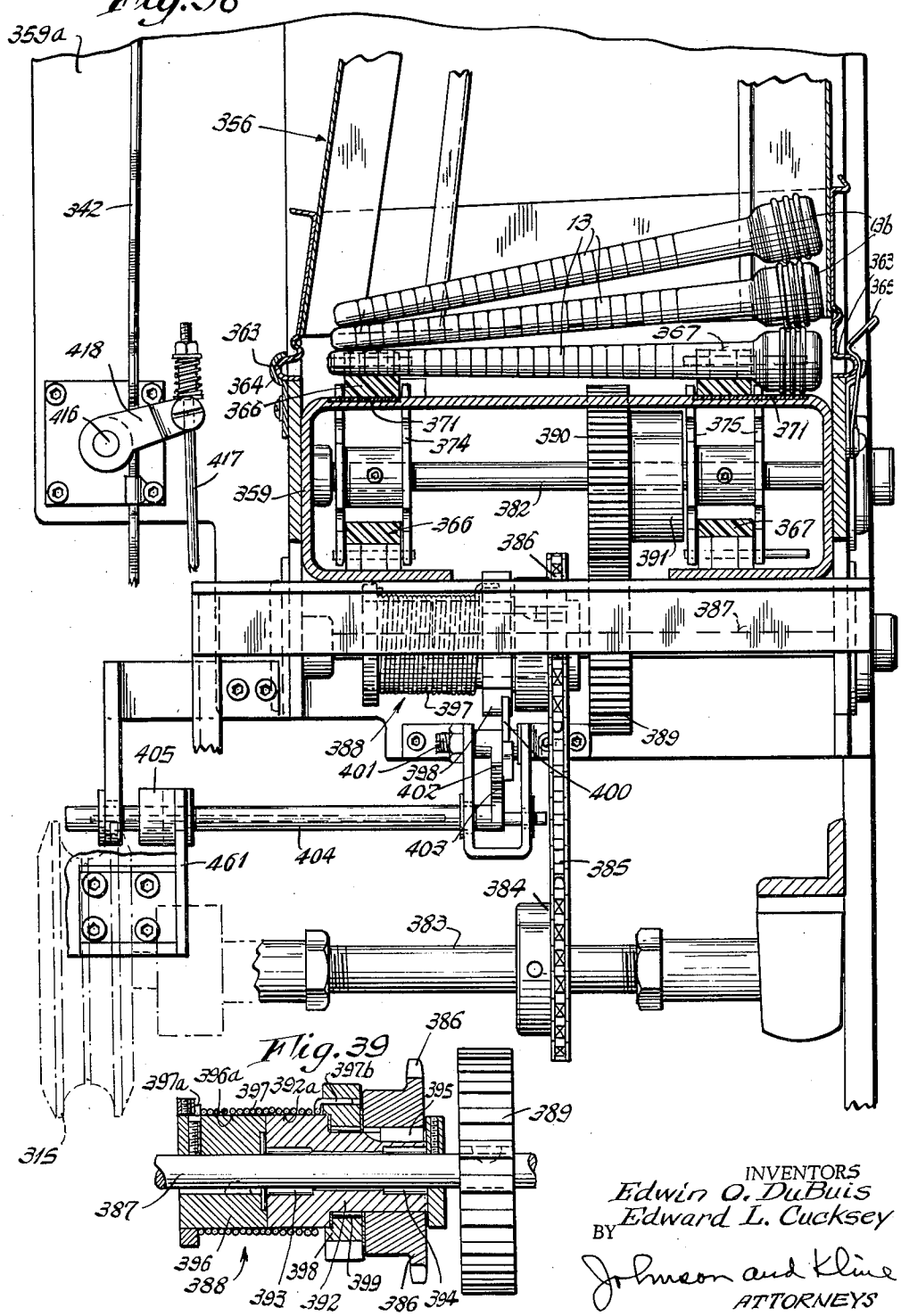

Fig. 39

INVENTORS
Edwin O. DuBuis
Edward L. Cucksey
BY
Johnson and Kline
ATTORNEYS

Feb. 19, 1963 E. O. DU BUIS ET AL 3,077,725

DOFFING AND DONNING MACHINE

Filed Nov. 15, 1961 22 Sheets-Sheet 18

Fig. 45

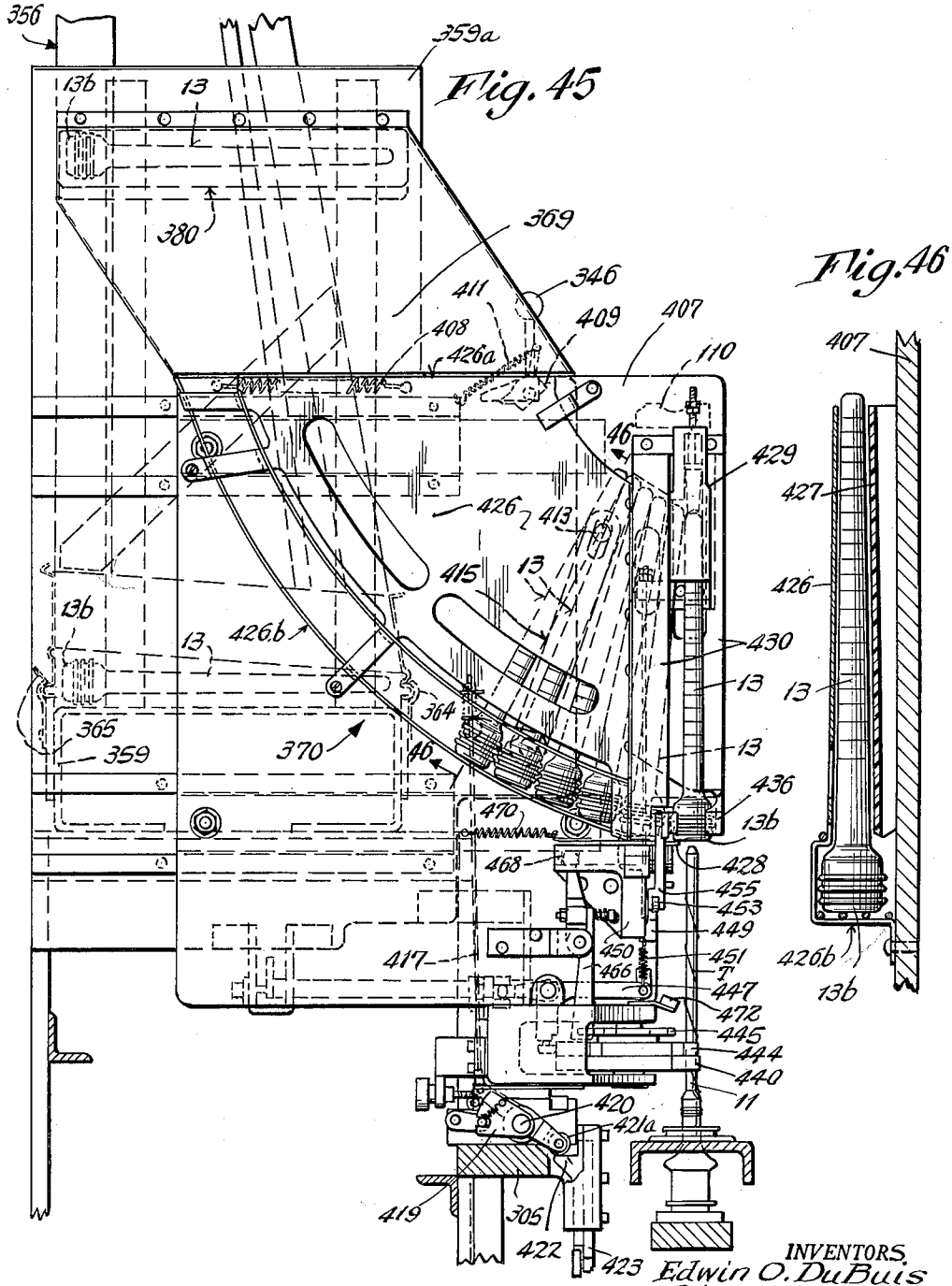

Fig. 46

INVENTORS.
Edwin O. DuBuis
BY Edward L. Cucksey
Johnson and Kline
ATTORNEYS

Feb. 19, 1963 E. O. DU BUIS ET AL 3,077,725

DOFFING AND DONNING MACHINE

Filed Nov. 15, 1961 22 Sheets-Sheet 19

Fig. 47

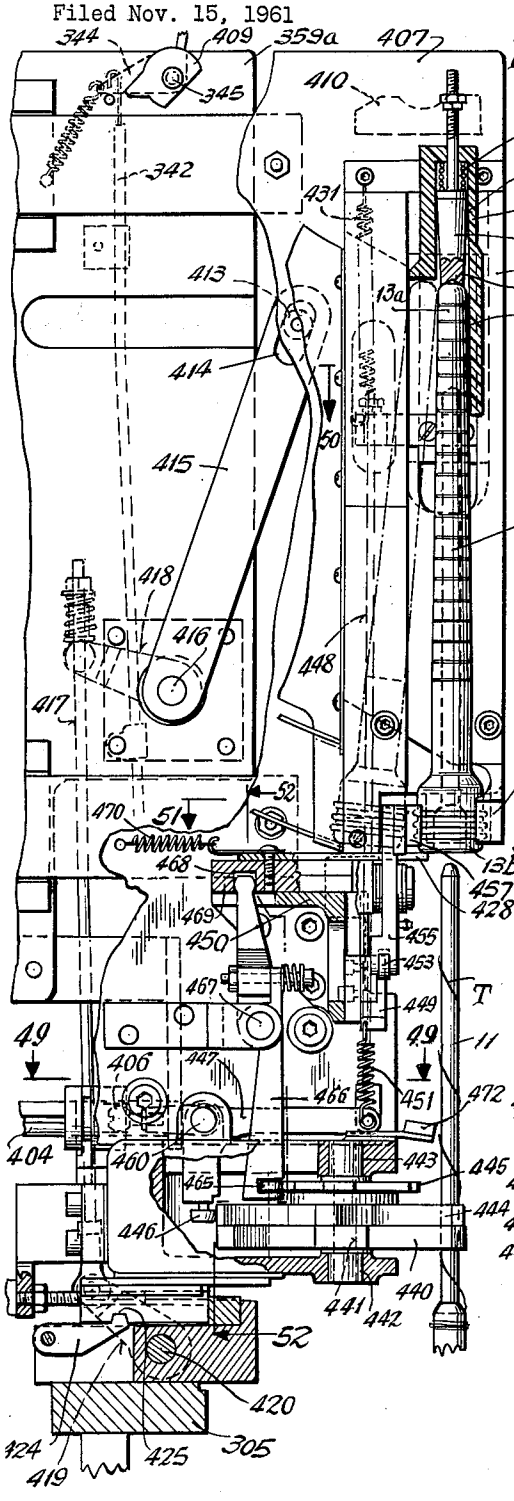

Fig. 48

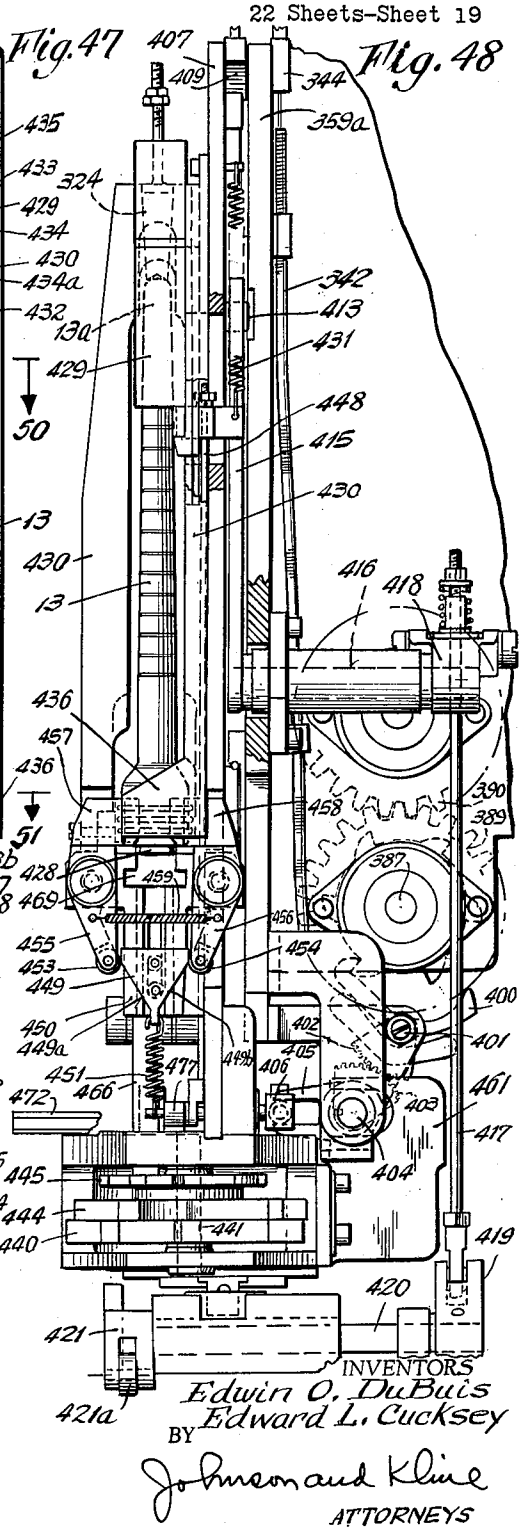

INVENTORS
Edwin O. DuBuis
Edward L. Cucksey
BY
Johnson and Kline
ATTORNEYS

Feb. 19, 1963 E. O. DU BUIS ET AL 3,077,725

DOFFING AND DONNING MACHINE

Filed Nov. 15, 1961 22 Sheets-Sheet 20

Fig. 50

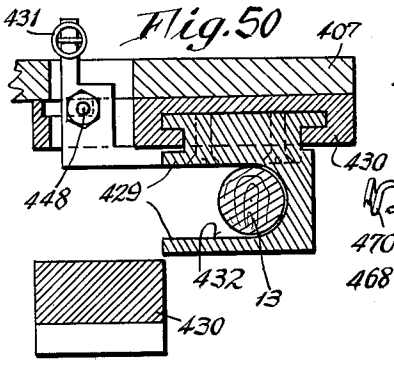

Fig. 51

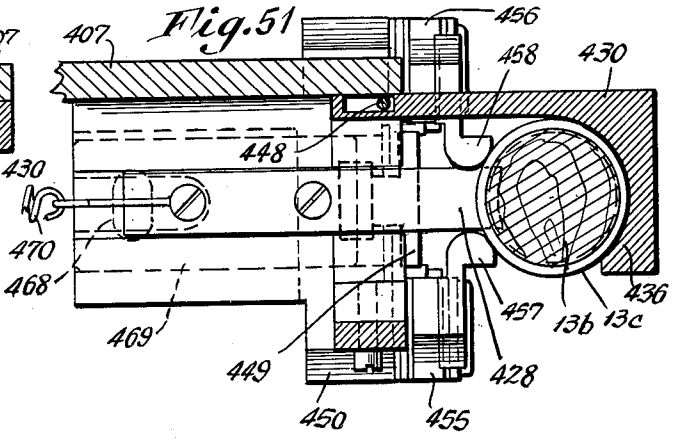

Fig. 49

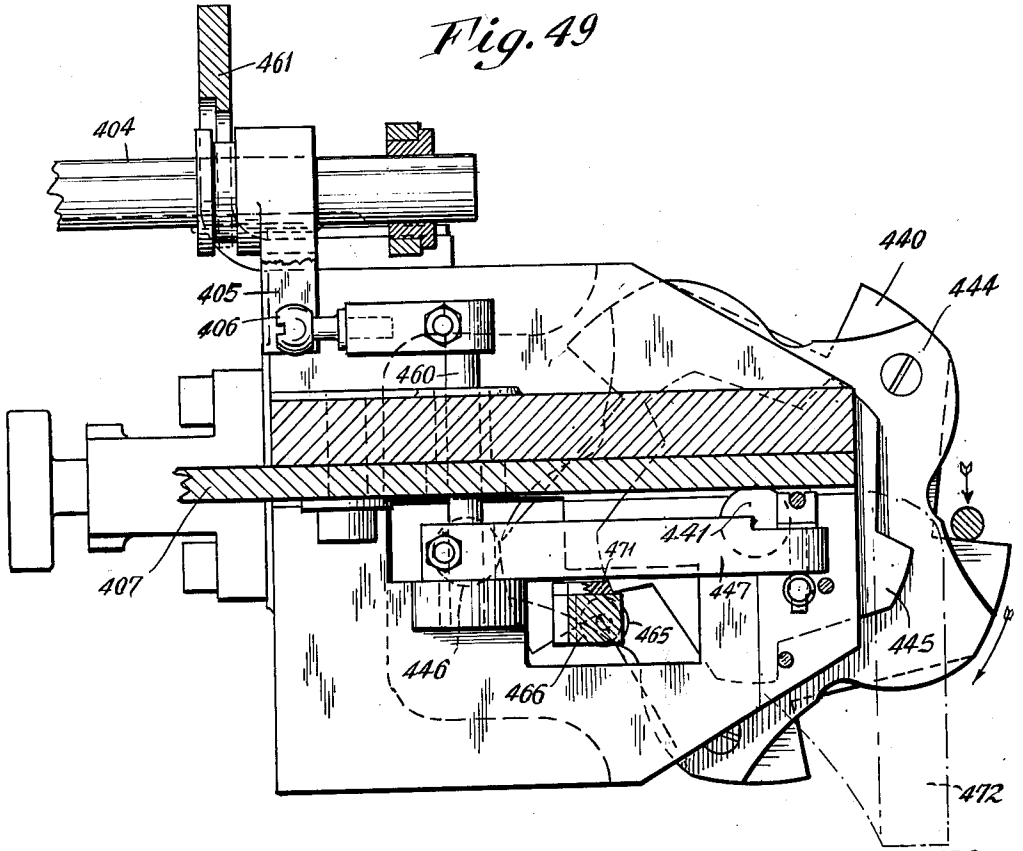

INVENTORS
Edwin O. DuBuis
BY Edward L. Cucksey
Johnson and Kline
ATTORNEYS

Feb. 19, 1963 E. O. DU BUIS ET AL 3,077,725

DOFFING AND DONNING MACHINE

Filed Nov. 15, 1961 22 Sheets-Sheet 21

Fig. 52

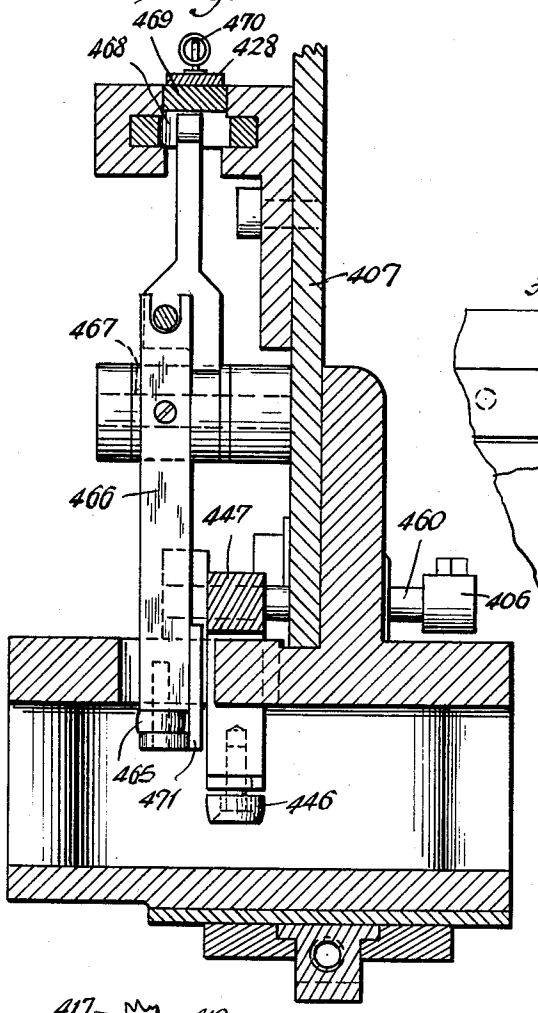

Fig. 54

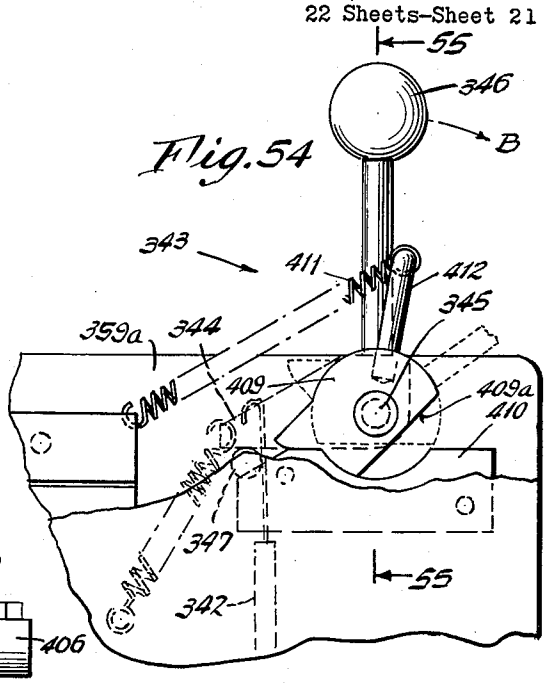

Fig. 55

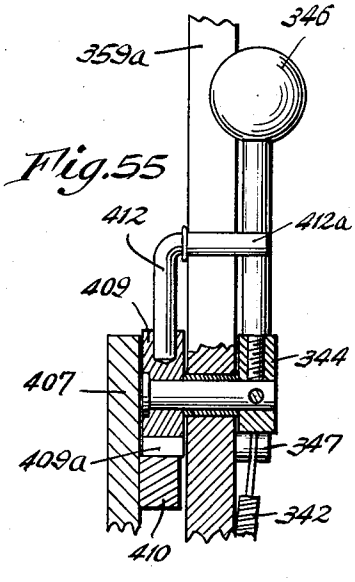

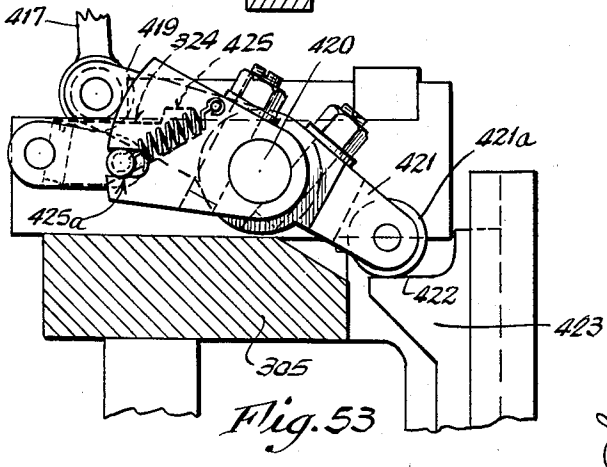

Fig. 53

INVENTORS
Edwin O. DuBuis
BY Edward L. Cucksey
Johnson and Kline
ATTORNEYS

Feb. 19, 1963 E. O. DU BUIS ET AL 3,077,725

DOFFING AND DONNING MACHINE

Filed Nov. 15, 1961 22 Sheets-Sheet 22

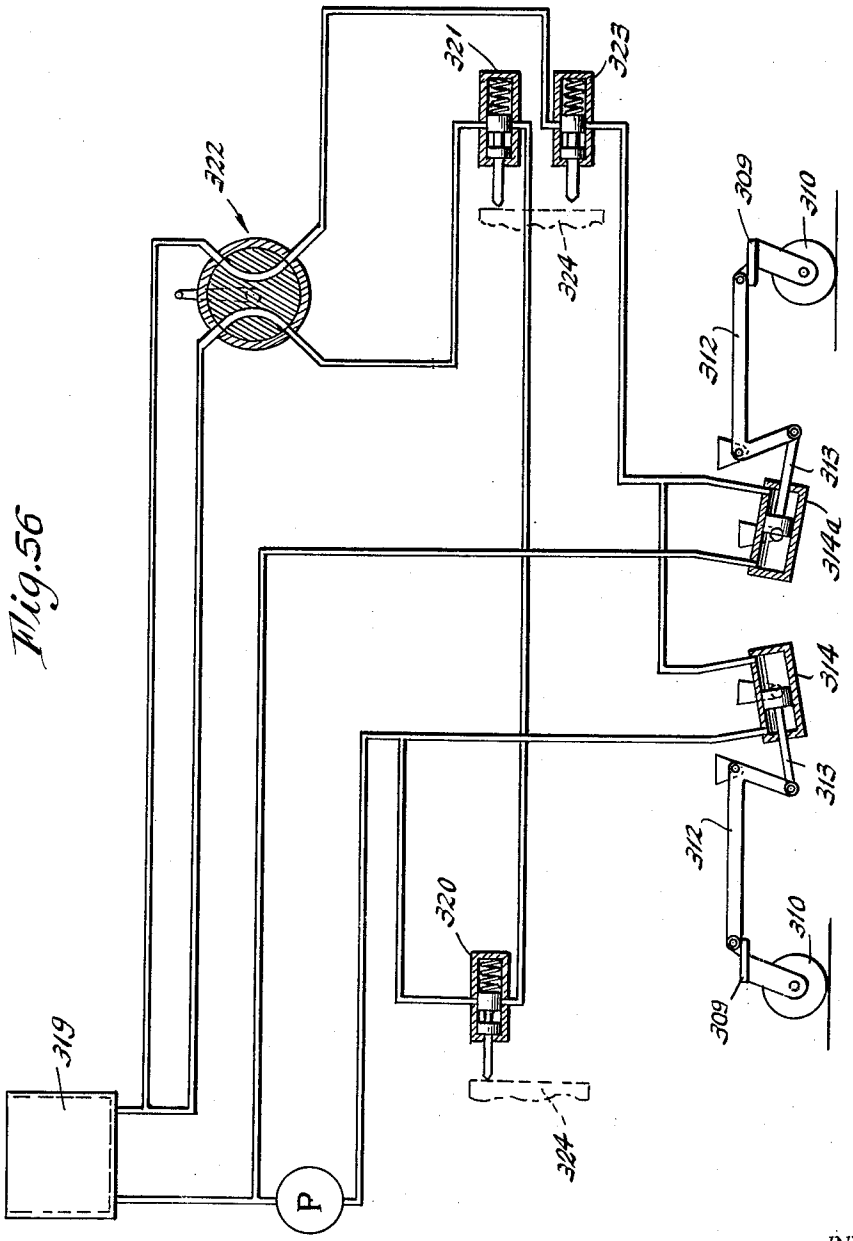

Fig. 56

INVENTORS
Edwin O. DuBuis
Edward L. Cucksey
BY
Johnson and Kline
ATTORNEYS

United States Patent Office 3,077,725 Patented Feb. 19, 1963

3,077,725

DOFFING AND DONNING MACHINE

Edwin O. DuBuis, Pearl River, and Edward L. Cucksey, Upper Nyack, N.Y., assignors to Willcox & Gibbs Sewing Machine Company, New York, N.Y., a corporation of New York

Filed Nov. 15, 1961, Ser. No. 152,407
67 Claims. (Cl. 57—53)

The present invention relates to a device for doffing full bobbins and for applying empty bobbins to spindles on a spinning frame, twister and the like.

It is an object of the present invention to provide a doffing and donning device which is of simple construction, easy to handle and operate and which will greatly expedite the tedious donning and doffing operation.

This is accomplished by having a wheeled carriage adapted to be mounted by rollers on rails on the spinning frame to move along the spinning frame and to carry unique doffing units which are maintained in a vertical position in all positions of movement from a retracted position to an operative position cooperating with the spindles, said carriage having means whereby containers for doffed bobbins can be readily removed and having novel empty bobbin supply means in which the bobbins are held in rows and are fed by belt means to a reservoir for a donning device having novel donning means for accurately and quickly applying the empty bobbins to the spindle.

A feature of the invention is the provision of means for lifting the supporting rollers above a rail on the frame and for automatically lowering said rollers in engagement with the rail when the carriage is in proper position. Preferably, the lifting of the rollers to the elevated position is accomplished by hydraulic means.

Another feature of the invention resides in the novel feeding of the empty bobbin feeding belt through clutch means by one of the supporting rollers as the roller rotates incident to the movement of the carriage along the frame for maintaining the reservoir for the donning means full of empty bobbins.

Another feature of the invention is a doffing means embodying a flexible lifting member which is pressed in serpentine relation around the spindles as the carriage moves along the frame and the bobbin is lifted thereby to raise the bobbin from the spindle with a minimum of turning motion.

Another feature of the invention resides in the accurate control of the donning mechanism by the spindle as an incident to the movement of the carriage along the row of spindles to be operated upon, and more particularly to the use of a star wheel carrying operating cams for the bobbin applying means and the support releasing means to insure coordinated operation and control thereof.

Another feature of the invention resides in means for controlling the rotation of the bobbins as they are doffed and donned to minimize unintentional breakage of the yarn.

Other features and advantages of the invention will be apparent from the specification and claims when considered in connection with the accompanying drawings in which:

FIGURE 1 is a side elevation of one form of the invention mounted on a spinning frame.

FIG. 2 is a view of the device looking from the spinning frame.

FIG. 3 is a view taken along line 3—3 of FIG. 2.

FIG. 4 is an enlarged detail of the portion of the link mechanism of the doffing means shown in FIG. 3.

FIG. 5 is a top view of the end of the feeler on the doffing mechanism.

FIG. 6 is a side view of the feeler.

FIG. 7 is a sectional view taken along line 7—7 of FIG. 6.

FIG. 8 is a sectional view showing the bobbin leaving the last doffing unit.

FIG. 9 is a sectional view taken along line 9—9 of FIG. 2.

FIG. 9*a* is an end view on line 9*a*—9*a* of FIG. 9.

FIG. 10 is an end view of the drum, partly in section, showing the bobbins discharged therefrom.

FIG. 11 is a detail view of the escapement mechanism.

FIG. 12 is a view, partly in section, showing the link belt for conveying bobbins from the supply.

FIG. 13 is a view, partly in section, showing the bobbins supported on the receiving shelf and the relation of the belt thereto.

FIG. 14 is the control lever for indexing the drum.

FIG. 15 is a fragmentary view showing the stop means for stopping the feeding of the belt.

FIG. 16 shows a side view of the roller for driving the flexible drive cable for the belt.

FIG. 17 is a sectional view taken along line 17—17 of FIG. 16.

FIG. 18 is a view taken along line 18—18 of FIG. 2.

FIG. 19 shows the structure at the end of the bobbin applying mechanism.

FIG. 20 is a longitudinal section through the bobbin applying mechanism.

FIG. 21 is a section taken along line 21—21 of FIG. 18.

FIG. 22 is a section taken along line 22—22 of FIG. 18.

FIG. 23 is a view taken along line 23—23 of FIG. 18.

FIG. 24 shows the donning mechanism.

FIG. 25 is an enlarged detail sectional view of the bobbin supports for holding the bobbin in bobbin applying position.

FIG. 26 is a side view of the support and operating means.

FIG. 27 is a view taken along the line 27—27 of FIG. 26.

FIG. 28 is a view taken along the line 28—28 of FIG. 26.

FIG. 29 is a sectional view showing the separator pin for holding the bobbin in the reservoir during the donning operation.

FIG. 30 is a diagrammatic hydraulic system.

FIG. 31 is a side view facing the spinning frame of a carriage showing another form of the invention.

FIG. 32 is a partial end view of the carriage.

FIG. 33 is an enlarged side view of the doffing mechanism shown in FIG. 31.

FIG. 34 is an end view of FIG. 33.

FIG. 35 is a detail view showing the lifter member engaging the bobbin.

FIG. 36 is a view taken along line 36—36 of FIG. 35.

FIG. 37 is a detail view, partly in section, of the bobbin supply and feed means for feeding the empty bobbins to the doffing mechanism.

FIG. 38 is a sectional view taken along line 38—38 of FIG. 37.

FIG. 39 is a longitudinal sectional view of the clutch mechanism shown in FIG. 38.

FIG. 40 is a detail view, partly in section, of the ratchet means in the clutch of FIG. 39.

FIG. 41 is a detail view of the rocking yoke for actuating the pawls of FIG. 40.

FIG. 42 is a top view of the feed chain of FIG. 37 with the bobbin in position therein.

FIG. 43 is a side view of a housing for supporting empty bobbins as shown in FIG. 31.

FIG. 44 is a sectional view taken along line 44—44 of FIG. 43.

FIG. 45 is an end view of the carriage of FIG. 31 showing the donning mechanism.

FIG. 46 is a sectional view taken along the line 46—46 of FIG. 45.

FIG. 47 is an enlarged end view of the donning mechanism.

FIG. 48 is a side view looking from the right of FIG. 47.

FIG. 49 is a sectional view taken along line 49—49 of FIG. 47.

FIG. 50 is a sectional view taken along the line 50—50 of FIG. 47.

FIG. 51 is a sectional view taken along line 51—51 of FIG. 47.

FIG. 52 is a sectional view taken along line 52—52 of FIG. 47.

FIG. 53 is a detail view of the latch and control means for controlling the movement of the donning unit to operative position and for holding it in operative position.

FIG. 54 is a view of the doffing unit and donning unit release mechanism.

FIG. 55 is a sectional view taken along the line 55—55 of FIG. 54.

FIG. 56 is a diagrammatic showing of the hydraulic system for the main frame lifting mechanism.

As shown in the drawings, the device of the present invention is adapted to be mounted to move in the direction of arrow A along the sides of a spinning frame **10**, FIG. 1, having a succession of spindles **11** extending therealong and to automatically doff full bobbins or wound packages **12** from the spindles and to replace them with empty bobbins **13**. The bobbins illustrated have a shank *13a* and an enlarged butt *13b* provided with rings *13c* as shown in FIG. 8. The spinning frame has a pair of spaced rails **14**, **15** extending along the side thereof in predetermined relation to the spindles and upon which the device of the present invention is mounted for movement therealong. The upper rail has an entrance cam **16** and an exit cam **17** for controlling the movement of the units into and out of operative relation with the spindles as will be explained.

The device of the present invention includes a carriage **18** having handles H or the like means at the rear for manipulating the same and is provided with doffing means **19** adjacent its forward end, receptacle means **20** to receive the full bobbins from the doffing means, and donning means **21** located adjacent the rear having supply means *21a* for feeding empty bobbins to the donning means.

Carriage

The carriage **18** of the form of the invention shown in FIGS. 1 to 30 comprises a main frame **22** having supporting rollers **23**, **24** adapted to be mounted on the rail **14** to support the device thereon for movement past the row of spindles **11** and having steadying wheels **25**, **26** for engaging the side of rail **15** for steadying the device as it moves along the frame as shown in FIGS. 2 and 3. A subframe means **27** is disposed below the main frame comprising crossframe members **28** at each end carrying the floor engaging wheels **29**, preferably located at the corners of the carriage, by which the device can be wheeled over the floor **30** between spinning frames and otherwise manipulated in the spinning mill.

To mount the device of the present invention on the rails, it is necessary to lift the main frame vertically with respect to the floor and subframe supported thereon in order to raise the rollers **23**, **24** above the rail **14** to permit them to be moved thereover and into position thereon. In accordance with the present invention a novel hydraulic means including a hydraulic system having piston and cylinder lifting means interconnecting the main frame and subframe is employed for this purpose. In the form of the invention shown in FIGS. 1–30, the main frame **22** and crossframe members **28** are connected together for relative movement by vertically disposed cylinders **31** which are mounted on each end of the main frame by bolts **32** and receive piston carrying rods **33** secured to the crossframe members **28**. By controlling the flow of fluid in the system to and from the cylinders, the main frame rollers can be raised and positioned on the rail. To stabilize the vertical relative movement of the main frame and subframe, a roller **34** secured to and movable with the crossframe cooperates with a fixed guide **35** carried by the main frame as shown in FIG. 3.

The hydraulic system for the piston and cylinder means **31**, **33** is diagrammatically shown in FIG. 30. It will be noted that the two cylinders **31** are connected in the hydraulic system in a main-slave cylinder relation so that when fluid is supplied under pressure by the pump P, which is herein illustrated as a manually operated pump having an operating handle **36**, fluid will pass into the upper end of the main cylinder and the lower end of the main cylinder will supply fluid to the upper end of the slave cylinder so that the two cylinders will operate simultaneously to raise the main frame evenly with respect to the subframe and thus lift the rail engaging rollers **23**, **24** to a point higher than the rail. The rollers are lowered automatically when the device is wheeled into a position in which it is parallel with the spinning frame and the rollers are disposed over the rail. This is accomplished by a pair of normally closed valves **37**, **38** which are connected in series with the pressure line leading to the upper end of the main cylinder to be actuated by actuators **39**, **40** located adjacent the ends of the main frame in position to engage the upper rail **14** as shown in FIG. 3 to open the valves and vent the upper part of the main cylinder to the return line to the reservoir **41**, and the weight of the main frame and elements carried thereby will be sufficient to cause the fluid to be forced out of the cylinders and permit the rollers to settle down and be supported by the upper surface of the rail. The venting can only occur however when the carriage is in proper position in which both actuators **39**, **40** are in contact with the rail **14**. With the cylinders vented, the floor engaging wheels are free to move, in the event that unevenness in the floor is encountered, without affecting the position of the carriage on the frame.

If desired, the pump can also supply fluid under pressure to accumulator **42** which can be used for other fluid operated devices as will be explained.

As shown in FIG. 1, the receptacle means **20** for receiving doffed bobbins comprises a bobbin box **43** carried by the main frame and removable from the side of the carriage.

In the presently preferred form of the invention, as shown in FIGS. 31 to 51, the carriage is so constructed that the wound bobbin receiving means can be removed from the ends of the carriage since this has many advantages over the removal from the side, such as greater capacity and the ability to remove the box when the device is operated in narrow aisles as are found in many mills. This is accomplished as shown in FIGS. 31 and 32 by a main frame **301** having a top **302** and a bottom **303** connected by a corner post **304**. One of the sides is provided with a truss member **305**, the apex of which engages the bottom **303** above a subcarriage mounting pad for supporting the subframe mounting bracket **305** below the bottom. As will be seen from the drawings, this provides an open end, as shown in FIG. 32, through which the bobbin box **307** for receiving doffed bobbins can be inserted and removed. If desired, an angle member **308** can be provided for guiding the box in its movement.

The subframe comprises crossframe members **309** at each end having the floor engaging wheels **310** at the ends thereof. The crossframe members are pivotally connected to the mounting bracket **306** by tie rods **311**. Link means, such as bellcranks **312**, are pivotally mounted on the bottom **303** of the main frame and have one end connected to the crossframe members **309** and the

other ends connected to piston carrying rods 313 operating in cylinders 314, 314a pivotally secured to the mounting bracket 306 so that as the cylinders are energized the rods 313 will cause the bellcrank means to pivot and the crossframe members to move toward or away from the bottom of the main frame and lower or raise the main frame to position rail engaging rollers 315, 316 in order to properly mount the carriage on rails 14, 15 to support the main frame on the spinning frame for movement therealong with rollers 317 engaging the rail 15 to stabilize the frame.

It will be seen that with the lifting means disposed entirely below the main frame there will be no obstructions to the movement of the bobbin box into position through the end of the main frame to be supported thereon.

The hydraulic circuit for raising and lowering the carriage is schematically shown in FIG. 56. In this form of the invention it will be noted that the two cylinders 314, 314a are connected in main-slave relationship in a closed hydraulic circuit. It is particularly advantageous to use a closed hydraulic circuit because it prevents the usual lint and the like found in spinning mills from entering the hydraulic system and interfering with the operation thereof.

Fluid in the hydraulic system is supplied under pressure by pump P which is a manual pump having a handle operator 318. It is fed from the pump P to one end of the main cylinder 314. The other end of the main cylinder is connected to the operating end of the slave cylinder 314a. The other end of the slave cylinder is connected back to a fluid reservoir 319.

Also provided in the hydraulic circuit are the normally closed valves 320, 321 which are mounted on the main frame adjacent each end and are connected to the pressure line leading to the main cylinder and to the reservoir through a two-way shutoff valve 322. Also connected in the line between the main and slave cylinders is a normally closed valve 323 which is connected through the four-way shutoff valve to the reservoir 319. Each of the valves 320, 321, 323 has an actuator projecting therefrom, with the actuator for valve 323 being located as shown in FIG. 56. The main frame is provided at each end with a controller 324 for moving the actuators of the valve when the controller engages the rail upon movement of the carriage into parallel relation. These will first operate the valves 320 and 321 and cause the fluid in the main cylinder to be bled therefrom back to the supply and permit the main frame to lower the rollers into supporting engagement with the rail 14 and frees the wheels from support of the carriage. It will be noted in FIG. 56 that the end of the actuator for valve 323 is displaced slightly from the end of the actuator for valve 321 located at the forward end of the machine so that its operation will be delayed until the machine is substantially settled on the rail at which time it will be opened and connect the line between the main and slave cylinders to the reservoir 319, and yet due to the gravity feed of the fluid in the line, the connection between the main cylinder and slave cylinder will always be maintained full of fluid.

The function of the slave circuit valve 323 is to disconnect the hydraulic connection between the two cylinders and this enables the machine, when it is on the spinning frame, to step over obstacles on the floor without imparting any vertical movement to the main frame carrying the doffing and donning devices.

As soon as the leading controller is moved out of engagement with the rail, it closes the circuit to the hydraulic system and locks the subframe to the main frame to carry the weight of the device and permits the wheels to be operative to move the frame over the floor and away from the machine after it has been completely removed from the rail.

In the event that it is desired to raise the main frame while the carriage is in position with the operators engaging the rail and opening the valves 320, 321, 323, the four-way valve 322 can be turned to close the return circuits from said valves and thus permit the main cylinder and slave cylinder to be energized by fluid under pressure to raise the main frame and permit the carriage to be removed.

Doffing Means

As shown in the drawing the doffing means for removing the filled bobbins or wound packages in response to forward movement of the device along the spinning frame is mounted on the leading portion of the carriage and comprises a plurality of units located in side-by-side relation and mounted on the main frame for movement from a normally retracted position on the side of the frame facing the spindles to a projected position, in which they are located to engage and remove the filled bobbin or wound package, by means of a novel parallelogram linkage mechanism which will maintain the units in a vertical position at all times. The first unit is provided with means adapted to break the drive between the spindle and package. Preferably this comprises means to be moved under the wound package as the device moves along the spinning frame and applies an upward force to break the driving connection. The remaining units cause the wound package to be lifted from the spindle and deflected into a chute leading to the receiving receptacle 20.

In the form of the invention shown in FIGS. 1 to 8, the doffing means 19 is in the form of a plurality of inverted U-shaped rigid bridge members. The first unit 44a is provided with a cam track or wedge member 45a the upper surface of which has a slight inclination to the horizontal so that as it passes under the bobbin it will apply a strong lifting force to break the driving connection to the bobbin. Each of the other units 44b, 44c, 44d, 44e, 44f is provided with a lifting cam track member 45b, 45c, 45d, 45e, 45f having an inclination greater than that of the first unit and which are positioned to form a composite track for raising the wound bobbin for the full height of the spindle and cause the bobbin to be removed therefrom.

After the bobbins have been moved upwardly along the inclined lifting cam means or track, the bobbin is moved into a deflector housing 46 carried by the last unit as shown in FIG. 2. The chute means is so related to the last cam track portion of the lifting cam means as to cause the bobbin as it leaves the spindle to tip in the direction of the arrow as shown in FIG. 8 to enter into a chute 47 and fall into the package receiving receptacle.

While in some installations a cutting device for the thread extending from the bobbin to the spindle can be provided to be actuated by the last spindle within the doffing means to cut the thread extending therefrom to the bobbin, it has been found that in most cases where relatively fine thread is used, such cutting means is unnecessary as the lifting of the bobbin will cause the thread to break between the bobbin and spindle and free the bobbin therefrom while maintaining the usual wrap around the spindle which serves as a starter for the next bobbin.

As shown in FIG. 2, the first unit of the doffing means is provided with a guide member or feeler 48 pivoted thereto and movable, when the first unit is moved into operative position, to extend forwardly so as to engage the threads extending to the spindles and to move them to a position in which they will be out of interference with the doffing mechanism. This mechanism is shown in FIGS. 5–7 wherein the forward end 49 of the feeler mechanism extends forwardly of a loop 50 which is reinforced by a bridge portion 51 to prevent the loop from spreading at the lower end. About half way back on the loop member there is a pad of friction material 52 which

is adapted to engage the wound package as the device moves along the spinning frame and to rotate the package in a direction to unwind sufficient thread therefrom to prevent unintentional breakage of the thread by the bobbin as it is lifted on the spindle.

As shown in FIGS. 6 and 7, the feeler arm has a segment 53 secured thereto cooperating with a gear 54 for moving a thread guide 55 rearwardly to position it behind the first unit so as to guide the thread away from contact by the doffing unit as the frame moves along the machine. A roller 56 cooperating with a pivoted lever 57 cooperating with the entrance and exit cams on rail 14 controls the pivotal movement of the guide with respect to the bridge unit.

In order to insure that the doffing units will always be in proper relation with the bobbins and not out of line therewith as may occur if the units move about a pivot, means are provided for maintaining them in a vertical position in their retracted position, in their operative position, and also during their movement between these positions. In the form of the invention shown in FIGS. 1 to 4 this is accomplished by a parallel linkage means 58 for each unit. One end of a lower operating link 59 is connected to the lower part of a doffing unit and the other end is pivoted on a shaft 60 extending longitudinally of and secured on the frame. The upper portion of the unit is connected to one end of a stabilizing link 61 having its other end secured by pivot 62 to the frame so that the unit, frame and two links form the parallelogram linkage means. From FIG. 3 it will be seen that the effective length of operating link and stabilizing link are the same and the pivots on the unit and on the frame are spaced apart the same distance, thus producing a strong, yet rigid parallelogram linkage mechanism for moving the unit from the operative position as shown in FIG. 3, wherein the U-shaped bridge surrounds the wound bobbin, to the retracted position shown in dot and dash lines in which it is normally held when not in operation. If desired, a tension spring 63 can be applied to the stabilizing link to take up any lost play in the linkage mechanism.

A spring 64 is connected to the operating link and unit and normally tends to move the operating link and unit in a direction as to cause the linkage mechanism to move the unit into its operative projected position. The operating link is provided with a latch member 65 which cooperates with a keeper 66 carried by a pivotal shaft 67 on the frame to hold the units in retracted position as shown in FIG. 4. The shaft has an operating arm 68 connected to a Bowden wire 69 operated by a trigger 70 on the handle H whereby the keeper can be moved upon actuation of the trigger on the handle by the operator so as to release the latch and permit the spring to move the unit outwardly toward operative position. It will be apparent that after the spring moves the unit beyond the pivotal mounting of the operating link with the frame, gravity will assist in urging the unit into a projected operating position.

In order to control the movement of the units into projected position, the operating link is provided with a roller 71 cooperating with a ledge 72 on a cam follower 73 mounted on the frame, as shown in FIGS. 3 and 4. The cam follower projects below the unit and is adapted to engage the entrance cam mounted on the top rail so as to control the movement of the unit into operative position with respect to the spindle at the proper time and prevent interference with the end of the spinning frame or the spindles as the carriage moves along the rail. After the side has been doffed, the cam follower will engage an exit cam on the top rail at the other end of the machine and cause the cam followers to lift the operating arm to the latched position shown in dot and dash lines in FIG. 4. To prevent the cam follower from dropping after it has left the exit cam, a friction spring 74 is provided to engage the follower and hold it in its raised position.

To insure that all of the units are in proper vertical position, the frame is provided with an adjustable stop member 75 for each unit which is adapted to be engaged by a shoulder 76 on the operating link to thus locate the units in the desired relation for cooperating with the spindles.

The presently preferred form of doffing means is shown in FIGS. 33 to 36. In this form, the doffing means comprises two units—a drive-breaking unit 325 and a lifting-unit 326. The two units each have a base and a face plate adjustably secured to the base. The first unit has a base 327*a* and face plate 328*a* which has mounted on the lower portion of the face plate an inclined cam track member 329 having a lifting surface forming a slight angle with the horizontal to be moved under the bobbin butt to break the drive connection of the bobbin with the spindle. The upper end of the face plate 328*a* is curved and has a thread guiding member 330 having a guiding surface 331 secured thereto forming a partial U or a J-shaped bridge member. The guiding member engages the thread coming to the spindle and moves it laterally as the device passes the spindle having the wound package thereon and out of the path of movement of the bridges. The second unit has a base 327*b* and an elongate face plate 328*b* mounted on the base and has secured thereto a lifting member 332 in the form of a flexible plate-like member 333 which is mounted at its lower edge on the face plate to extend upwardly at a steep angle with respect to the member 329 as shown in FIG. 33 to break the thread as an incident to the lifting of the bobbin. It is so positioned that its upper edge, which is free to flex in a plane transversely to the axis of the spindles, engages the butt of the bobbin and lifts it upwardly along the spindle. Preferably the flexible member is provided with a backup spring member 334 having a plurality of lanced fingers 334*a* engaging the back of the flexible member to press it into contact with the spindles as the machine moves along the spinning frame as shown in FIG. 36 to cause the flexible member 333 to sepentine around the spindles as shown in FIG. 36 so that the edge will engage the bobbins at a point closest to a plane passing through the center of the spindle and thus minimize any rotation as may be caused by the passing of the bobbin along the lifting surface.

Also carried by the face plate is a portion 335 extending over the spindle and forming another partial U or J-shaped bridge member having a thread guide surface 331*b* and an upwardly inclined channel member 336, which is disposed in parallel relation to the edge of the lifting cam member, for receiving the tips of the bobbins as they are lifted by the lifting cam member to accurately control the upper end of the bobbin as it is moved upwardly along the spindle. Carried by the outer portion or short leg of the J-shaped bridge member is an elongate flexible ejector spring 337 which is fixed at one end and has its other end normally curved in a direction transversely of the spindle to engage the package and be charged and tensioned thereby as the unit moves along the row of spindles and lifts the bobbin. The member preferably has a polished surface to facilitate its engagement with the package without placing undue strain on the material of the package, and has on its end a plurality of rubber buttons 337*a* adapted to engage the bobbin to rotate the bobbin and unwind enough thread at about the time of discharge, so as to prevent premature breakage of the thread. The charged ejector spring engages the bottom portion of the package as shown and as soon as the package leaves the spindle, applies an ejecting force laterally at the base thereof while the tip is still held in the guide channel and deflects the bobbin, butt first, into a chute 326*a* carried by the frame which directs the wound bobbins into bobbin receptacle 307.

Because of the steep incline of the member 333, the

thread will normally break between the bobbin and spindle as the bobbin is lifted. If it is not broken during the lifting it will break as an incident to the ejection of the bobbin.

The units are mounted on the frame by parallelogram linkage mounting means similar to that used in the other form of the invention and includes an operating link 338 and a stabilizing link 338*a* with the base plate 327*a* and frame forming the other links.

The operating link is connected to the base by a spring 339 which urges the units to projected position. The link 338 carries a latch 340 movable into latched position with a keeper member 341 pivotally connected on the frame when the units are in normal retracted position. The keeper is actuated by a Bowden wire 342 extending from a release means 343 at the end of the frame as shown in FIG. 34 to release the units from retracted position. The release 343, as shown in FIGS. 54, 55, comprises an arm 344 connected to an end of the Bowden wire 342. The arm is rotatable on a pivot 345 having a handle 346. The arm is normally urged against a stop pin 347 to hold the keeper in latch receiving position. When the handle is moved in the direction of arrow B, FIG. 54, the keeper is pivoted to release the latches in the doffing units. Upon relase, the units move toward projected position controlled by a cam follower 348 having a shelf 349 to engage a roller 350 on the control link. The cam follower cooperates with the entrance and exit cams 16, 17 on the rail 14 to control the movement of the units. In order to prevent the second unit from being moved from projected position due to the reactive pressure of the lifting member as it is pressed against the spindle, a stop is provided comprising a pivoted member 351 pivoted on the frame and movable to engage a shoulder 352 on the operating link to hold it firmly against retrograde movement. A roller 353 on the member 351 is engaged by the link 338 to move the member 351 to release position as an incident to the movement of the unit to retracted position by the exit cam thereby permitting the second unit to be moved to retracted position by the cam 17.

Bobbin Supply Means

The frame carries a bobbin supply means for holding a supply of empty bobbins and feeding them to the donning mechanism to be applied thereby to the spindles from which the wound bobbins have been doffed.

The empty bobbins are supported in rows in the supply and are removed therefrom by a link conveyor belt having bobbin receiving sockets and transferred to a reservoir for the donning mechanism. The belt is driven as an incident to the movement of the carriage along the side of the spinning frame.

In the form of the invention shown in FIGS. 1–30, the supply comprises a drum 80 mounted on a shaft 81 extending longitudinally of the frame and supported above the frame by a cradle 82 pivotally mounted on a post 83 projecting from the frame as shown in FIG. 3. The other end of the cradle is supported by rollers 84 on the top of the frame as shown in FIG. 22 for movement as will be explained.

The drum, as shown in FIGS. 9–11, rotates within a casing 85 and is provided with V-shaped dividers 86 forming a plurality of longitudinally extending channels 86*a*, each holding a plurality of bobbins 13 with their butts 13*b* adjacent the periphery. The bobbins are maintained in the channels through the engagement of the butt thereof with the casing, and are held in aligned and proper position in the channels by means of separator fins 87 for engaging the bobbins adjacent the tips thereof and holding them against tipping in the channel.

The casing has an opening 88 adjacent the top through which bobbins can be inserted into aligned channels for loading the drum. The casing has an exit opening 89 adjacent the lower portion thereof through which the bobbins can drop by gravity so as to have their butts supported on a shelf 90 on the cradle. A continuous link belt 91 is mounted on the cradle adjacent the shelf 90 and is provided with projections 92 forming sockets thereon as shown in FIG. 12 to engage the bobbins on the shelf, as shown in FIG. 13, and deliver them to a reservoir 93 carried by the end of the carriage for holding bobbins in position to be donned.

The drum has counterweights 94 thereon which normally tend to rotate the drum in a counterclockwise direction as shown in FIG. 9 and is provided with a ratchet 95 cooperating with pawl means 96 for controlling said movement and automatically indexing the drum to provide a new supply of bobbins when the row of bobbins engaging the belt has been moved into the reservoir.

When the drum is ready for reloading, bobbins are inserted through the opening 88 therein into the channel located under the opening. After the row has been filled, the carrier is turned by hand in a clockwise direction to bring the next channel in position before the opening. During the loading of the carrier, a shield 97 carried by the axle is released from a raised position in which it it latched by latch 98 to a lower position in which it closes the exit opening 89 in the casing so as to prevent the bobbins from dropping through the opening as they are moved during the loading of the drum.

After all the channels have been filled, the slide is removed to latched position and the first row of bobbins drops to the shelf to be engaged by the belt. The belt is driven by the rail engaging roller 23 connected to a flexible drive shaft 99. One end of the drive shaft is connected to the roller by an adjustable coupling as shown in FIGS. 16, 17 with the shaft being secured to the vertically adjustable bracket 100 and having a gear 101 cooperating with gear 102 on a sleeve 103 drivingly connected to the wheel 23. A quill 104 is adjustably mounted in the sleeve for adjusting the roller in a horizontal plane. The other end is connected through a friction clutch 106 and gearing 107 to the belt to drive the belt at a speed greater than that which is required by the donning mechanism so that the belt will cause the reservoir to be quickly filled up, and when the reservoir is full, the belt will stop feeding due to the slipping of the clutch in the drive to the belt. As each bobbin is removed from the reservoir for each donning operation, the belt is then freed to supply an additional bobbin to the reservoir.

In order to automatically index the drum, a detector plate 109 is pivotally mounted on the shaft 110 on the cradle to be engaged by the bobbins on the shelf and be held thereby in a detecting position. When the last bobbin moves from the shelf into the reservoir, the plate moves from the position shown in FIG. 10 to the position shown in FIG. 11 wherein it actuates the pawl through linkage 111 to cause the drum to be stepped to the next position in which the channel carrying the next row of bobbins is disposed over the exit opening. As the bobbins drop by gravity to the shelf, the detector member moves to the position of FIG. 10 to be in position to again index the drum when the bobbins in the row have been removed. A stop 112 connected to the plate 109 engages the connector pin on the link belt as shown in FIG. 15 and stops the belt until the bobbins have dropped on the shelf and the deflector plate is moved to the position of FIG. 10.

The bobbin supply means of the preferred form of the invention as shown in FIGS. 31 and 37 to 44 comprises vertically disposed channels 355 formed in a removable housing 356 and adapted to support a plurality of empty bobbins 13. While a single housing may be used, it is preferred for ease in handling to form the housing in a plurality of units 357. As shown in FIG. 31 each has a handle 358 by which the housing can be positioned on a base 359 supported on the top of the frame 301.

The channels 355 in the housing are shaped as shown in FIGS. 43 and 44 and hold columns of bobbins in position to drop by gravity into engagement with the feed means.

Before the housing is placed on the base the bobbins are held in the housing by a removable closure plate **360** slidable in channels **361** formed in the housing. The plates can be removed when the housing is in position on the base to free the bobbins to drop and be picked up by the feeding means. The closure, when removed, is mounted on the side of the housing by clips **362** to be available to reclose the housing when it is removed for filling. The housings are held in position over the base by ribs **363** seated in recessed brackets **364** carried by the side of the base, one of which is resilient and forms a releasable latch **365**.

The bobbin feed means comprises a pair of continuous link belts **366, 367** mounted on the top of the base. The belts are formed of links shaped as shown in FIG. 37 to provide sockets **368** to receive and hold bobbins and convey them to a chute **369** leading to a bobbin reservoir **370** for the donning mechanism. The belts are supported on antifriction surfaces **371** on the base and extend under the housing with their sockets facing upwardly and are located by guides **372** to receive and hold the bobbins, falling from the channels, adjacent the tip **13***a* and butt **13***b* portions thereof as shown in FIG. 42. The links of the belt are connected by pins **373** which project therefrom to cooperate with drive sprockets **374, 375** to drive the belts. The pins **373***a* in the belt **367** adjacent the butt are extended so as to receive the butt **13***b* therebetween with the rings **13***c* contacting the pins to stabilize the bobbins in the sockets.

The loaded belts make an inside turn around the sprockets **374, 375** and move upwardly in the base extension **359***a* with the bobbins disposed between guide plates **376, 377** and then make an outside turn about the idler sprockets **378** with the outer guide plate **376** terminating adjacent an aperture **380** in the wall of the vertical extension through which the bobbins pass into a chute **369** leading to the bobbin reservoir **370** for the donning mechanism. As will be noted in FIG. 37, the end **369***a* of the chute engaging the tip of the bobbins provides a tortuous path to slightly retard the falling bobbins and insure that the butt falls first into the reservoir so that they will be in a vertical position when fed to the doffing mechanism. After the belts have delivered the bobbins they move back under the base as shown in FIG. 37 to again move over the base and under the channels.

The drive sprockets **374, 375** are carried by shaft **382** driven in response to rotation of the rail engaging roller **315**, as the carriage moves along the spinning frame. The roller rotates shaft **383** and drives a sprocket **384** secured thereto for a driving chain **385**. The driving chain drives a sprocket **386** which is connected to a counter shaft **387** through an intermittently operated clutch **388**. The counter shaft has a gear **389** thereon engaging a gear **390** on the feed sprocket shaft. Preferably the gear is connected to drive the feed sprocket shaft through an overload clutch **391** to prevent damage in the event that the bobbins should jam. While various forms of intermittently operated clutches may be used, the one illustrated in FIGS. 38, 39 comprises a sleeve **392** rotatably mounted on the shaft **387** by bearings **393, 394** and connected to the chain sprocket **386** by a key **395** and a second sleeve **396** secured to the shaft **387**. Both sleeves have aligned cylindrical portions **392***a*, **396***a* to receive a torsion spring **397** mounted thereon and having one end **397***a* surrounding the second sleeve and the other end **397***b* secured to a control ratchet wheel **398** mounted by bearings **399** for rotation on the first sleeve. The torsion spring is of the type that normally winds up on the sleeve and drivingly connects the two sleeves, which driving connection is broken when the spring is unwound. Cooperating with the ratchet wheel **398** is a control pawl **400**, which normally holds the ratchet and causes the spring to unwind and break the driving connection. The pawl pivotally mounted on shaft **401** is connected with a gear segment **402** cooperating with a gear segment **403** carried by rock shaft **404**, as shown in FIG. 40, so as to be released by the cooperating gear segments when the rock shaft **404** is actuated by a rocking fork **405** shown in FIG. 41. The fork is slidably carried by the rock shaft to be driven by movable driver element **406** of the donning mechanism as it moves vertically as an incident to the donning of a bobbin by the donning mechanism as will be explained.

Thus it will be seen that the feed belt is actuated to feed one bobbin to the reservoir each time a bobbin is applied to a spindle and another bobbin is removed from the reservoir by the donning mechanism.

Should it be desired to fill the reservoir while the carriage is stationary, the shaft carrying the idler sprockets **378** can be manually rotated causing said sprockets to advance the feed belt and deliver the required bobbins to the chute.

Since the bobbins from the most remote channel in the housing are removed first they extend under and hold the bobbins in the other channels. In order to prevent the weight of the bobbins in the channels from applying a drag on the feed belt, the spacing of the centers of the channels has been changed slightly from the spacing of the centers of the sockets so that the bobbins in the channels engage bobbins in the sockets at points displaced from the vertical axis of the round butt so that they will apply lateral components of force to said butts which will aid in feeding the bobbins by the belt.

Donning Means

In accordance with the present invention the reservoir for the donning means and the donning means are carried by the rear end of the supply means and are movable as a unit from a retracted position to a projected position in which they cooperate with the spindles which have been doffed to apply a new bobbin thereto. The reservoir is so positioned with respect to the donning mechanism that the bobbins are fed butt down to a bobbin applying position in the donning mechanism, in which position the bobbins are supported on a releasable support and, at the time they are being donned, have a pressure applied thereto to rapidly impale them on the spindle when the support is released.

In order to accurately control the impaling of the bobbin on the spindle, means are provided to be actuated by the spindles to coordinate the removal of the support and apply pressure to the bobbin, in response to movement of the machine, when the spindle is in position to receive the new bobbin.

In the form of donning mechanism shown in FIGS. 2, 9 and 18–29, the donning device and the reservoir therefor are mounted on the end of the cradle carrying the bobbin supply means with the input end of the reservoir **93** aligned with a passage **115** in the cradle through which the bobbins are directed by the belt **91**. They enter the reservoir with the butt end down as shown in FIG. 18. In order to keep the bobbins in alignment as they move down the inclined reservoir, a pair of plates **116** is provided for engaging the shanks of the bobbins, as shown in FIG. 21, to properly locate the bobbins with the bobbins resting on the bottom **117** of the reservoir and the tips engaging the top **118** of the reservoir as shown in FIG. 18.

The output end of the reservoir is located adjacent the donning device and feeds bobbins to a bobbin applying position in the donning device. A guide **119** on the donning device having a socket **120** facing the reservoir to receive the tip and a blade **121** for engaging the shank of the bobbin locate the bobbin in position in which it is supported by the bobbin supporting means of the donning device as will be explained.

The donning device and reservoir are moved from a retracted position to a projected position in which the bobbin applying portion of the donning mechanism is positioned in the plane of the row of spindles to cooperate therewith by pivoting the cradle on the post **83**. The end of the cradle carrying the donning means is supported on

rollers 84 engaging the top of the main frame to facilitate the movement of the cradle between retracted and projected positions and adjustable stops 124, 125 carried by the base limit the movement of the cradle in each position.

In order to move the cradle, a piston and cylinder means is connected in the hydraulic system as shown in FIG. 30. The cylinder 126 is secured to the frame and the piston 127 is mounted in the cylinder with its piston rod 127*a* connected to the cradle. A valve 128 normally connects the rod end of the cylinder to the accumulator 42 which receives fluid under pressure from pump P through check valve 129 and urges the cradle to retracted position in which it is held. When the actuator 128*a* of the valve 128 is operated to connect pressure to the head end of the cylinder, it will cause the cradle to move outwardly and be latched in projected position by shoulder 130 engaging a pivoted latch 131 having a roller 132 supported on the top of a cam follower 133 adapted to engage the exit cam 17 on the rail to release the cradle to move the donning mechanism to retracted position before the end of the spinning frame is reached.

In order to control the applying of the bobbin to the spindle quickly and accurately, the donning mechanism is controlled by the spindles as the carriage moves along the frame. As shown in FIG. 26, the bobbin is supported in applying position by bobbin supporting means. The bobbin supporting means as shown in detail in FIGS. 25 to 29 comprises a pair of supporting members 135 having arcuate bobbin engaging portions 136 having tapered upper surfaces 136*a* to engage the rings 13*c* on the butt 13*b* of the bobbin as shown in FIGS. 25 and 26, hold it and center it in proper position on the donning device above the spindles to be released so as to be impaled on the spindles. The supporting members are normally held in supporting position by a latch 137 which is controlled by a feeler 138 engaging the tip of the spindle to release the support as will be explained. In order to rapidly impale the bobbin on the spindle when the support is released, means is provided for applying a pressure to the bobbin. This means includes a feeler member 140 which is rotatably mounted on a shaft 141 projecting from the bottom of the donning unit and, as shown in FIGS. 9 and 24, projects outwardly to engage the spindle adjacent the base thereof. The shaft carries a bevel gear 142 meshing with bevel gear 143 to rotate shaft 144 having the arm 145 thereon. The arm 145 is connected to one end of a pull rod 146. The other end of the pull rod is connected to linkage mechanism 147 secured to a yoke 148 carried by a slide in the form of a sleeve 149 vertically slidable in a bearing 150 carried by the cradle as shown in FIGS. 9, and 18–20.

The yoke 148 is shown in detail in FIG. 19 and has a split clamping member 151 secured to the sleeve and connectors 152 secured to the clamping member and pivotally connecting the link 147*a* of the linkage member thereto.

The linkage mechanism and sleeve are normally urged to a retracted position as shown in FIG. 9 by a spring 153 connected to the frame and a bracket 154 on the push rod as shown in FIG. 9.

The sleeve has a bobbin engaging means slidable thereon. This, as shown in FIG. 20, comprises a shaft 155 having a head 156 at its inner end adapted to engage the end of the bobbin. The shaft is normally urged into projected position by a spring 157 surrounding the shaft and butting the end of the sleeve.

As the feeler engages the bottom of the spindle, it rotates the shaft 141 and moves the arm 145 downwardly. This moves the slide or sleeve 149 down until the bobbin engaging portion or head 156 on the shaft 155 engages the bobbin whereupon further movement of the slide compresses the spring and applies pressure to the bobbin to press it against the support to cause the bobbin to be transferred quickly and be impaled on the spindle as soon as the support means is released.

In the form of the invention shown in FIGS. 9 and 18–28 the control means to release the support is actuated by the tip of the spindle as it passes through a gap carried below the support means.

The gap is formed by a fixed abutment 160 on the donning device having an inclined surface 161 to properly guide any misaligned spindles into proper alignment with the bobbin on the support and a trip member 162 pivoted on the donning device and mounted to cooperate with the other side of the spindle. As the spindle passes through the gap, it will pivot the trip member and the latch release means 163 thereon to move the latter to overcome spring 137*a* and release the latch 137 normally holding the support members in supporting relation. As soon as the latch is released, a pair of springs 164 connected to the support members moves the support members to spread position and releases the bobbin for instant movement toward the spindle to impale the bobbin on the spindle.

As the shaft 141 rotates to charge the bobbin applying mechanism, it causes an arm 165 to rotate and through link 166 move a separator needle or finger 167, as shown in FIG. 29, to a position between the bobbin on the support in bobbin applying position and the next bobbin in the reservoir to prevent the next bobbin in the reservoir from moving to bobbin applying position prior to the full movement of the bobbin onto the spindle until the shaft rotates in a counter-clockwise direction upon the firing of the bobbin to the shaft. The arm has a cam 168 on the end thereof, said cam having a portion 168*a* which normally engages a roller 169 on the bobbin supporting mechanism and blocks its movement to release position. When the arm moves the finger to the dot-dash position of FIG. 29, the cam will move out of engagement with the roller and permit the support to release the bobbin. As the arm moves back, the portion 168*b* of the cam will automatically reset the support to receive the next bobbin in the reservoir as the finger moves to full line position and permits the bobbin to fall by gravity into position thereon.

In the donning means of the present preferred form of the invention shown in FIGS. 31–56, the donning means and its reservoir are carried on a plate 407 slidable on the end face of the vertical extension 359*a* of the base from a retracted position to a projected position in which the donning means holds a bobbin in a bobbin applying position disposed over the spindle to which the bobbin is to be applied.

The plate is normally urged by spring 408 having one end secured to the extension of the base 359*a* and the other end connected to the plate 407 to the projected position, and is held in a retracted position by a rotatable detent 409 engaging a keeper 410 on the top of the plate 407 as shown in FIGS. 47, 54 and 55. The detent is yieldably held in position to interlock with the keeper by a spring 411, which has one end connected to the base and the other end connected to an arm 412 on the detent so that, upon rotating the arm against the action of the spring, the flat 409*a* on the detent can be aligned with the top of the keeper as shown in dotted lines in FIG. 54 and be released therefrom.

The arm 412 can have an extension 412*a* projecting into the path of movement of the handle 346 so that the detent can be released independently or can be released conjointly with the doffing units in response to manipulation of the handle 346 by its engagement with an extension on the arm projecting beyond the handle as shown in FIG. 55. With this construction it will be seen that the operator can release the doffing and donning units individually or simultaneously for movement to projected position.

After the detent has been released, the plate 407 is urged forwardly by spring 408. This movement is controlled however by a roller 413 secured to the plate and riding in a slot 414 in one end of a pivoted arm 415 mounted on shaft 416. A pull rod 417 is connected to the end of an arm 418 mounted on shaft 416 in predetermined angular relation to arm 415. The other end

of pull rod 417 is connected to an arm 419 on shaft 420 rotatably mounted on the frame. The shaft 420 has an arm 421 secured thereto and provided with a roller 421*a* at its other end adapted to engage a shelf 422 on a cam follower 423 for engaging the top of the rail 14 to cooperate with the entrance cam 16 to control the movement of the plate 407 by the cam 16, as the plate moves forwardly, and carries the donning device and reservoir into bobbin applying relation with the spindle after the donning device has been moved by the carriage into adjacent relation with the first spindle. When the donning device moves into projected position, a latch 424 carried on the base of the main frame cooperates with notch 425 to hold it in its projected position and it will remain in its projected position until the carriage is about to leave the spinning frame whereupon the cam follower 423 will engage the exit cam 17 and rotate the shaft 420. This, through the pin and slot connection 425*a*, will cause the latch 424 to be released and the pull rod to move downwardly and cause the connected arm 415 to move rearwardly and move the sliding plate back into its retracted position.

The reservoir includes a fan-shaped casing 426 shaped as shown in FIG. 46 and having its inlet end 426*a* normally disposed under the end of the chute 369 when the plate is in projected position, so that bobbins fed from the bobbin supply to the chute will fall into the reservoir with the bobbins supported therein with their butts down and resting on the bottom strip 426*b* as shown in FIG. 45.

Preferably, a plastic backing plate 427 is provided in the reservoir to overlie the shanks of the bobbins, as shown in FIG. 46, so as to prevent displacement thereof and to maintain the bobbins in proper fan relation with their butts engaging the bottom strip of the reservoir.

As shown in FIGS. 45, 47 and 48, the bobbins are fed down the reservoir by gravity, with the first bobbin in line being delivered into a bobbin applying position in the donning device in which it is supported by a retractable supporting member 428 slidably mounted on the donning device. To provide an impaling force for the bobbin to apply it to the spindle a slide 429 is slidably mounted on a base 430 and is normally urged upwardly to a retracted position by spring 431. The slide has a tip-receiving socket 432 communicating with a bore 433 extending upwardly into the slide as shown in FIG. 47. Within the bore, a member 434 having a bobbin engaging portion 434*a* is slidably mounted and normally urged by a spring 435 in the direction out of the bore and toward the bobbin tip.

The socket is positioned to receive the shank as shown in FIGS. 47 and 50 while the bottom of the bobbin is stopped and located in position by an arcuate portion 436 carried by the base 430. The slide 429 is so arranged that as it is moved down it first causes the bobbin engaging portion 434*a* to engage the tip of the bobbin and continued movement will compress the spring 435, applying a force to the bobbin which will cause it to be quickly impaled on the spindle when the supporting member 428 is retracted.

A feature of this form of the invention resides in the coordinated control of the movement of the slide 429 to charge the impaling spring feeding of new bobbins to the donning device and the releasing of the support 428 by a single drive means, driven by the spindles to be donned as the carriage moves along the frame. This drive means, in the preferred form of the invention, comprises a star wheel 440 mounted on a shaft 441 rotatable in bearings 442, 443 on the donning device to be supported below the device in position to engage the bottom of the spindles to be driven by engagement therewith as the carriage moves along the frame. The star wheel as shown in FIGS. 47 and 49 has secured thereon, in superposed relation, a cam wheel 444, and a trigger wheel 445 for moving the slide to charge the impaling spring and for releasing the support in a fixed time sequence.

In order to move the slide downwardly to charge the spring 431 and provide impaling pressure on the bobbin, a cam roller 446 is mounted on one end of a pivoted bellcrank 447 to be rocked by the cam as the star wheel is rotated. The other end of the bellcrank is connected by a rod 448 to the slide 429 which is normally urged into an upward position, as shown in FIGS. 47 and 48, by the spring 431 having one end connected to the plate and the other end connected to the slide.

Also operated by the bellcrank 447 is a spreading wedge 449 slidably mounted on a bracket 450. A resilient operator 451 is connected to the wedge and to the end of the bellcrank to move it downwardly in unison with the slide 428. The wedge has inclined faces 449*a*, 449*b* adapted to engage a pair of rollers 453, 454 on one end of pivoted arms 455, 456. As shown in FIG. 48, the arms ars normally urged together by spring 459. The pivoted arms 455, 456 carry blocking members 457, 458. The wedge is normally held in upper position with the rollers pressing against the wedge surfaces adjacent the tip of the wedge and the blocking members in retracted position, and the bobbins are free to move out of the reservoir. As the bellcrank moves down, as shown in FIG. 48, it causes the blocking members to rock to the position of FIG. 51 to prevent the next adjacent bobbin in the reservoir from moving to bobbin applying position until after the bobbin in said position has been donned on the spindle.

As shown in FIG. 49, the pivot shaft 460 for the bellcrank 447 carries the actuator 406 for the fork 405 mounted on bracket 461 and slidable on shaft 404 for controlling the pawl and causing the intermittent clutch to be operated one for each operation of the bellcrank so that another bobbin is fed to the reservoir for each one that is donned, thereby maintaining the reservoir full.

In order to release the support 428 at the proper time, a follower roller 465 is connected to the lower end of a lever 466 pivoted on pivot 467 and having its upper end disposed in a recess 468 in the bottom of a slide 469, as shown in FIG. 52. The slide carries the support member 428 extending under the bobbin for reciprocating the same between supporting position and release position.

The slide plate is normally urged to a release or retracted position by a spring 470 which also holds the roller against the trigger wheel so that it moves back at a predetermined time in the movement of the carriage along the frame as determined by the spindle being donned to release the bobbin and permit it to be impaled rapidly on the spindle. If desired, a plate 471 of antifriction material on the lever 466 engages the trigger wheel 445 to reduce the friction thereon to quickly retract the support.

As soon as the support 428 is retracted and the bobbin is released, the spring 435 causes the bobbin to be impaled on the spindle below the donning device. As the bobbin moves down the spindle its base will engage a friction pad 472 which due to the movement of the carriage will impart rotation to the bobbin in a direction to cause the bobbin to, in effect, screw onto the spindle having the usual thread T wound therearound as shown in FIG. 45, thus greatly reducing breakage in the thread and assisting the bobbin to seat properly on the spindle.

From the foregoing it will be seen that by driving the controllers for the release of the bobbin, the impaling of the bobbin, the blocking of the reservoir, and the feeding of the empty bobbins to the reservoir, in accordance with the movement of the carriage along the frame, from a common driver, coordinated action of these elements of the donning means will insure a more accurate and uniform operation thereof permitting a high speed operation.

Variations and modifications may be made within the scope of the claims and portions of the improvements may be used without others.

We claim:

1. A carriage adapted to be mounted for movement on horizontal rails extending along a side of a machine comprising a frame having rail engaging rollers; a subframe having floor engaging wheels; means connecting the frame and subframe, including lift means for relative vertical movement for raising the rail engaging rollers above the height of the horizontal rails; and control means for the lift means including controllers engaging the rail, when the frame is in parallel relation with the rail and the rollers are disposed above the rail, for automatically causing the rail engaging rollers to descend to supporting relation with the rail for mounting the carriage on the rail for movement therealong.

2. A carriage adapted to be mounted for movement on horizontal rails extending along a side of a machine comprising a frame; a subframe having floor engaging wheels mounted thereon, said frame having rail engaging rollers adapted to be positioned in supporting engagement with the rails; piston and cylinder lifting means connecting the frame to the subframe for vertical relative movement with respect thereto; power means including a hydraulic circuit for energizing the lifting means to raise the frame and position the rail engaging rollers above the rail; and control means disposed in spaced relation along the frame to engage the rail, when the carriage is in position to be supported on the rails, to deenergize the lifting means whereby the rail engaging rollers move down into supporting relation with the rail and release the floor engaging wheels from support of the carriage.

3. A carriage adapted to be mounted for movement on horizontal rails extending along a side of a machine comprising a frame having floor engaging wheels mounted thereon for relative vertical movement, said frame having rail engaging rollers adapted to be positioned in supporting engagement with the rails; piston and cylinder means connecting the wheel and frame; hydraulic system means for supplying fluid to the piston and cylinder means to raise the frame and position the rail engaging rollers above the rail; and control means including a pair of valves disposed in spaced relation along the frame and having means to engage the rail when the carriage is in position to be supported on the rails, said valves being connected in series and operated upon concurrent engagement with the rail to deenergize the piston and cylinder means whereby the rail engaging rollers move down into supporting relation with the rail and release the floor engaging wheels from support of the carriage.

4. A carriage adapted to be mounted for movement on horizontal rails extending along a side of a machine comprising a frame having floor engaging wheels mounted thereon for relative vertical movement and having rail engaging rollers adapted to be positioned in supporting engagement with the rails; fluid operated lifting means connecting the wheels and frame; a supply of fluid for energizing the lifting means to raise the frame and position the rail engaging rollers above the rail; and sequencing valve means disposed in spaced relation on the frame and operated when the carriage is in position to be supported on the rails to deenergize the lifting means whereby the rail engaging rollers move down into supporting relation with the rail and release the floor engaging wheels from support of the carriage.

5. A carriage having doffing and donning mechanism thereon adapted to be mounted for movement on horizontal rails extending along a side of a spinning machine for doffing and donning on the spinning machine comprising a frame having an open side through which a receiver for doffed packages can be moved to a receiving position, said frame having a plurality of vertically extending cylinders fixed thereon at the ends thereof; a subframe including a plurality of floor engaging wheels having pistons connected thereto and disposed in the cylinders for mounting on the frame for relative vertical movement with respect to the wheels, said frame having rail engaging rollers adapted to be positioned in supporting engagement with the rails; fluid power means connected to the cylinders for lifting the frame with respect to the floor engaging wheels and positioning the rail engaging rollers above the rail; and control means disposed in spaced relation on the frame to engage the rail when the carriage is in position to be supported on the rails to vent the cylinders whereby the rail engaging rollers move down into supporting relation with the rail and release the floor engaging rollers from support of the carriage.

6. A carriage adapted to be mounted for movement on horizontal rails extending along a side of a machine comprising a base having floor engaging wheels; a frame mounted on the base for relative vertical movement and having rail engaging rollers adapted to be positioned in supporting engagement with the rails; hydraulic lifting means including a main cylinder and slave cylinder connecting the base and frame; power means including a closed hydraulic system having a fluid reservoir for energizing the lifting means to raise the frame and position the rail engaging rollers above the rail; and control means including valve means disposed in spaced relation on the frame and controllers therefor to engage the rail, when the carriage is in position to be supported on the rails, to deenergize the lifting means whereby the rail engaging rollers move down into supporting relation with the rail and release the floor engaging wheels from support of the carriage and the fluid in the slave cylinder returns to said reservoir.

7. A carriage having doffing mechanism thereon adapted to be mounted for movement on horizontal rails extending along a side of a spining machine for doffing packages therefrom comprising an elongate frame having means releasably supporting a receiver for the doffed packages for movement into a receiving position; a subframe having a plurality of floor engaging wheels thereon; means including piston and cylinder means connecting the frame and subframe and disposed below the frame, said frame having rail engaging rollers adapted to be positioned in supporting engagement with the rails; means, including a closed fluid system having a closed fluid reservoir, energizing the cylinders for lifting the frame vertically with respect to the floor engaging wheels and positioning the rail engaging rollers above the rail; and control means in said system for deenergizing the cylinders when the carriage is in position to be supported on the rails whereby the rail engaging rollers move down into supporting relation with the rail and release the floor engaging wheels from support of the carriage.

8. A carriage having doffing and donning mechanism thereon adapted to be mounted for movement or horizontal rails extending along a side of a spinning machine for doffing and donning the machine, comprising an elongate frame having open ends through which a receiver for the doffed packages can be moved to receiving position; a subframe having a plurality of floor engaging wheels thereon, said subframe being pivotally connected to the bottom of the frame; piston and cylinder means disposed below the elongate frame and connecting the frame and subframe, said frame having rail engaging rollers adapted to be positioned in supporting engagement with the rails; fluid power means energizing the cylinders for lifting the frame vertically with respect to the floor engaging wheels and positioning the rail engaging rollers above the rail; and control means adapted to automatically deenergize the cylinders when the carriage is in position to be supported on the rails whereby the rail engaging rollers move down into supporting relation with the rail and release the floor engaging wheels from support of the carriage.

9. A carriage having doffing and donning mechanism thereon adapted to be mounted for movement on horizontal rails extending along a side of a spinning machine for doffing packages therefrom comprising an elongate frame having a receiver for the doffed packages, said

frame having rail engaging rollers adapted to be positioned in supporting engagement with the rails; a subframe having a plurality of floor engaging wheels thereon, said subframe being connected to the frame; a hydraulic system including a fluid reservoir and a pair of cylinders connected by a line in main-slave relation for lifting the frame vertically with respect to the floor engaging wheels and positioning the rail engaging rollers above the rail; and control means including a pair of normally closed valves in said system and disposed adjacent the ends of said carriage and controllers therefor for engaging the rail and opening said valves to automatically vent the cylinders when the carriage is in position to be supported on the rails whereby the rail engaging rollers move down into supporting relation with the rail and release the floor engaging wheels from support of the carriage.

10. A carriage having doffing and donning mechanism thereon adapted to be mounted for movement on horizontal rails extending along a side of a spinning machine for doffing packages therefrom comprising an elongate frame having open ends through which a receiver for the doffed packages can be moved to receiving position, said frame having rail engaging rollers adapted to be positioned in supporting engagement with the rails; a subframe having a plurality of floor engaging wheels thereon, said subframe being pivotally connected to the bottom of the frame; a closed hydraulic system including a fluid reservoir and a pair of cylinders connected by a line in main-slave relation disposed below the frame for lifting the frame vertically with respect to the floor engaging wheels and positioning the rail engaging rollers above the rail; and control means including a pair of normally closed valves in said system and disposed adjacent the ends of said carriage and controllers therefor for engaging the rail and opening said valves to automatically vent the cylinders when the carriage is in position to be supported on the rails whereby the rail engaging rollers move down into supporting relation with the rail and release the floor engaging wheels from support of the carriage; and a normally closed valve in the line between the cylinders adapted to be opened by one of the controllers to vent said line and free the wheels for vertical movement whereby the wheels can raise over obstacles on the floor without lifting the rollers from the rail.

11. A carriage having doffing and donning mechanism thereon adapted to be mounted for movement on horizontal rails extending along a side of a spinning machine for doffing packages therefrom comprising an elongate frame having open ends through which a receiver for the doffed packages can be moved to receiving position, said frame having rail engaging rollers adapted to be positioned in supporting engagement with the rails; a subframe having a plurality of floor engaging wheels thereon, said subframe being pivotally connected to the bottom of the frame; a closed hydraulic system including a fluid reservoir and a pair of cylinders connected by a line in main-slave relation disposed below the frame for lifting the frame vertically with respect to the floor engaging wheels and positioning the rail engaging rollers above the rail; control means including a pair of normally closed valves in said system and disposed adjacent the ends of said carriage and controllers therefor for engaging the rail and opening said valves to automatically vent the cylinders when the carriage is in position to be supported on the rails whereby the rail engaging rollers move down into supporting relation with the rail and release the floor engaging wheels from support of the carriage; a normally closed valve in the line between the cylinders adapted to be opened by one of the controllers to vent said line and free the wheels for vertical movement whereby the wheels can raise over obstacles on the floor without lifting the rollers from the rail; and manually operated valve means for closing the venting system whereby said cylinders can be energized to lift the frame for removal from the machine.

12. A carriage having doffing and donning mechanism thereon adapted to be mounted for movement on horizontal rails extending along a side of a spinning machine for doffing packages therefrom comprising an elongate frame having open ends through which a receiver for the doffed packages can be moved to receiving position, said frame having rail engaging rollers adapted to be positioned in supporting engagement with the rails; a subframe having a plurality of floor engaging wheels thereon, said subframe being pivotally connected to the bottom of the frame; a closed hydraulic system including a fluid reservoir and a pair of cylinders connected by a line in main-slave relation disposed below the frame for lifting the frame vertically with respect to the floor engaging wheels and positioning the rail engaging rollers above the rail; and control means including a pair of normally closed valves in said system and disposed adjacent the ends of said carriage and controllers therefor for engaging the rail and opening said valves to automatically vent the cylinders when the carriage is in position to be supported on the rails whereby the rail engaging rollers move down into supporting relation with the rail and release the floor engaging wheels from support of the carriage.

13. In combination with a machine having a horizontal row of operable elements; a carriage movable along the machine in the direction of said row of operable elements and along said row of operable elements; an operating means mounted on the said carriage movable parallel to itself between an inoperative position and an operative position aligned with said row of elements for performing operations on successive operable elements during carriage movement, said means being normally urged by resilient means toward said operative position; and means automatically effecting movement of said operating means to said operative position during carriage movement before reaching the first operable element, and for effecting movement of said operating means to said inoperative position after passing the last operable element of said row of elements so that said operating means in said inoperative position can pass parts of the machine obstructing the path of movement of said operating means in said operative position.

14. A device for doffing bobbins from a row of spindles supported on a machine comprising a carriage; means mounting the carriage on the machine to move along a path parallel to the spindles; a doffing device having doffing means; and mounting means for mounting said doffing device on the carriage for movement from a retracted position to an operative position in which it is disposed on opposite sides of said spindles, said mounting means including a parallel linkage system for moving the doffing device quickly between said positions and resilient means normally urging the device to operative position, said doffing means including means for breaking the bobbin loose from the spindle and for guiding the bobbin during the passage thereof from the spindle.

15. In combination with a spinning machine having a horizontal row of spindles; a carriage movable along the spinning machine in the direction of said row of operable elements and along the same; a doffing device having doffing means, means mounting said device on said carriage movable parallel to itself between an inoperative position and an operative doffing position aligned with said row of spindles for raising bobbins on successive spindles during carriage movement, said means including spring means normally urging said device to operative position; and means automatically effecting movement of said doffing device to said operative position before said doffing device reaches the first spindle, and for effecting movement of said doffing device to said inoperative position after passing the last spindle of said row of spindles so that said doffing device in said inoperative position can pass parts of the spinning machine obstructing the path of

movement of said doffing device in said operative position.

16. In combination with a spinning machine having a horizontal row of spindles; a carriage movable along the spinning machine in the direction of said row of operable elements and along the same; a doffing device having doffing means including means for raising bobbins on said spindle; parallelogram linkage means for supporting said doffing device on said carriage movable parallel to itself between a retracted inoperative position located transversely spaced from, and above said row of spindles and an operative doffing position aligned with said row of spindles for raising bobbins on successive spindles during carriage movement; means normally urging the doffing device to operative position and means automatically controlling movement of said doffing device to said operative position before said doffing device reaches the first spindle, and for effecting movement of said doffing device to said inoperative position after passing the last spindle of said row of spindles so that said doffing device in said inoperative position can pass parts of the spinning machine obstructing the path of movement of said doffing device in said operative position.

17. In combination with a spinning machine having a horizontal row of spindles; a carriage movable along the spinning machine in the direction of said row of spindles and along the same; a doffing device including means for raising bobbins on said spindles; parallelogram linkage means for supporting said doffing device on said carriage movable parallel to itself between an inoperative position located transversely spaced from, and above said row of spindles and an operative doffing position aligned with said row of spindles for raising bobbins on successive spindles during carriage movement, resilient means connected to said linkage means and tending to move the device to said operative position; means for holding said doffing device in said inoperative position until the same arrives at a region of the spinning machine preceding the first spindle of said row of spindles in the direction of carriage movement so that said doffing device assumes said operative position when arriving at said region; and means automatically effecting movement of said doffing device to said inoperative position after passing the last spindle of said row of spindles so that said doffing device in said inoperative position can pass parts of the spinning machine obstructing the path of movement of said doffing device in said operative position.

18. In combination with a spinning machine having a horizontal row of spindles; a carriage movable along the spinning machine in the direction of said row of operable elements and along the same; a doffing device including means for raising bobbins on said spindles; parallelogram linkage means for supporting said doffing device on said carriage movable parallel to itself between an inoperative position located transversely spaced from, and above said row of spindles and an inoperative doffing position aligned with said row of spindles for raising bobbins on successive spindles during carriage movement, resilient means connected to said linkage means and tending to move the device to said operative position; means on said machine for holding said doffing device in said inoperative position until the same arrives at a region of the spinning machine preceding the first spindle of said row of spindles in the direction of carriage movement so that said doffing device assumes said operative position when arriving at said region; and cam means for effecting movement of said doffing device to said inoperative position after passing the last spindle of said row of spindles so that said doffing device in said inoperative position can pass parts of the spinning machine obstructing the path of movement of said doffing device in said operative position.

19. A device for doffing bobbins from a row of spindles supported on a spinning frame comprising a carriage; means mounting the carriage on the spinning frame to move along a path parallel to the spindles; doffing means; and mounting means for mounting said doffing means on the carriage for movement from a retracted position to an operative position with respect to said spindles, said mounting means including a parallel linkage system for moving the doffing means quickly between said positions, said doffing means including a first unit having a wedge for breaking the drive connection of the bobbin to the spindle and a plurality of lifting units having means thereon for lifting the bobbins from the spindle, the last unit having a deflector for engaging the bobbin as it leaves the spindle to deflect the bobbin into a chute.

20. A device for doffing bobbins from a row of spindles supported on a machine comprising a carriage; means mounting the carriage on the machine to move along a path parallel to the spindles; doffing means; and means mounting the doffing means on the carriage for movement from a retracted position to an operative position with respect to said spindles and the bobbins thereon, said doffing means including two doffing units, the first having a drive breaking cam and the second having a flexible inclined lifting member engaging the bottom of the bobbin, said lifting member being yieldably urged into engagement with the spindle to serpentine therearound as the member moves past the spindle to apply lifting force substantially in the plane of the axes of the spindles whereby turning of the bobbins by the lifting member is held to a minimum.

21. A device for doffing bobbins from a row of spindles supported on a machine comprising a carriage; means mounting the carriage on the machine to move along a path parallel to the spindles; doffing means; and means mounting the doffing means on the carriage for movement from a retracted position to an operative position with respect to said spindles and the bobbins thereon, said doffing means including two doffing units, the first having a drive breaking cam and the second having a flexible inclined lifting member engaging the bottom of the bobbin, said lifting member being yieldably urged into engagement with the spindle by resilient means to serpentine therearound as the member moves past the spindle to apply lifting force substantially in the plane of the axes of the spindles whereby turning of the bobbins by the lifting member is held to a minimum, latch means holding the second unit in projected position against movement by said resilient means, and means on the first unit releasing said latch means as an incident to the movement of the first unit to the retracted position.

22. A device for doffing bobbins from a row of spindles supported on a machine comprising a carriage; means mounting the carriage on the machine to move along a path parallel to the spindles; doffing means for removing bobbins from the spindle; and means mounting the doffing means on the carriage in a position in which the doffing means is operative with respect to said spindles and bobbins thereon, said doffing means including two doffing units, the first having a drive breaking cam and the second having a flexible inclined lifting member to engage the bottom of the bobbin and a channel parallel with the lifting member to engage the top of the bobbin, said lifting member being yieldably urged into engagement with the spindle to serpentine therearound as the member moves past the spindle to apply lifting force substantially in the plane of the axes of the spindles whereby turning of the bobbins by the lifting member is held to a minimum.

23. A device for doffing bobbins from a row of spindles supported on a machine comprising a carriage; means mounting the carriage on the machine to move along a path parallel to the spindles; doffing means for removing bobbins from the spindle; means mounting the doffing means on the carriage for movement from a retracted position to an operative position with respect to said spindles and bobbins thereon, said doffing means including two

doffing units, the first having a drive breaking cam and the second having a flexible inclined lifting member to engage the bottom of the bobbin and a channel parallel with the lifting member to engage the top of the bobbin, said lifting member being yieldably urged into engagement with the spindle to serpentine therearound as the member moves past the spindle to apply lifting force substantially in the plane of the axes of the spindles whereby turning of the bobbins by the lifting member is held to a minimum; and an ejector spring engaging the bobbin adjacent the bottom thereof and applying a lateral pressure thereto as the bobbin leaves the spindle and while its tip is held against lateral movement by the channel to eject the bobbin into a chute.

24. A device for doffing bobbins from a row of spindles supported on a machine comprising a carriage; means mounting the carriage on the machine to move along a path parallel to the spindles; doffing means; means mounting the doffing means on the carriage for movement from a retracted position to an operative position with respect to said spindles, said doffing means including two inverted J-shaped doffing units, the first having a drive breaking cam and the second having a flexible inclined lifting member, resilient means urging said member into engagement with the spindle to serpentine therearound as the member moves past the spindle to apply lifting force substantially in the plane of the axes of the spindles whereby turning of the bobbins by the lifting member is held to a minimum; and a flat polished ejector spring having one end connected to the short leg of the J and the other end curving into the path of movement of bobbins being lifted by the lifting member to be deflected thereby and tensioned to apply a lateral pressure to the bobbin as the bobbin is lifted to eject the bobbin laterally as the bobbin leaves the spindle.

25. A device for doffing bobbins from a row of spindles supported on a machine comprising a carriage; means mounting the carriage on the machine to move along a path parallel to the spindles; doffing means; means mounting the doffing means on the carriage for movement from a retracted position to an operative position with respect to said spindles, said doffing means including two doffing units, the first having a drive breaking cam and the second having an inclined lifting member to engage the bottom of the bobbin and a channel parallel with the lifting member to engage the top of the bobbin as said bobbin is lifted on the spindles by the lifting member; and a flat polished ejector spring having one end connected to the second unit and the other end curving into the path of movement of bobbins being lifted by the lifting member to be deflected thereby and tensioned to apply a lateral pressure to the bobbin as the bobbin is lifted to eject the bobbin laterally as the bobbin leaves the spindle while the top is held by the channel, said spring having friction means on the curved end to rotate the bobbin.

26. A device for doffing bobbins from a row of spindles supported on a machine comprising a carriage; means mounting the carriage on the machine to move along a path parallel to the spindles; a doffing device having doffing means; mounting means for mounting said doffing means on the carriage for movement from a retracted position to an operative position with respect to said spindles, said mounting means including a parallel linkage system for moving the doffing device quickly between said positions and resilient means for moving the doffing device to operative position; and releasable latch means for holding said doffing means in retracted position.

27. A device for donning and doffing bobbins from a spinning frame having a row of spindles supported thereon and having longitudinally extending rails secured to the side of said frame; a carriage mounted on said rails for movement along a path parallel to the spindles; a doffing device carried by the forward end of the carriage; a donning device carried by the rear portion of the carriage, said donning and doffing devices being normally urged to a projected position in which they cooperate with the spindles; latch means for holding said doffing device in retracted position; latch means for holding said donning device in retracted position; control means including means for releasing the latch for the doffing device and means for releasing the latch for the donning device, and means for simultaneously releasing both of said latch means; and means on said rail for controlling the movement of said released doffing and donning devices into operative relation with the spindles when the carriage moves said devices into position on the frame to cooperate with said spindles.

28. A device for supplying empty bobbins to be donned on a row of spindles supported on a spinning frame comprising a carriage; means mounting the carriage on the spinning frame to move along a path parallel to the spindles; supply means for empty bobbins on the carriage comprising an elongate drum rotatably mounted on the carriage, said drum having a plurality of longitudinally extending channels therein, each supporting a plurality of bobbins with the butt portion thereof adjacent the periphery of the drum, a casing enclosing the drum and having an exit opening through which the bobbins drop to a supporting shelf in a discharge position, and indexing means including a ratchet and pawl for stepping the drum to move the channels into alignment with the exit opening; means feeding the bobbins from the shelf to a reservoir for a donning device; and means controlled by the movement of the last bobbin from discharge position to move to step the drum to position a new supply of bobbins in discharge position.

29. A device for donning empty bobbins on a row of spindles supported on a spinning frame comprising a carriage; means, including rollers, mounting the carriage on the spinning frame to move along a path parallel to the spindles; supply means for empty bobbins on the carriage comprising an elongate drum rotatable on the carriage, said drum having a plurality of longitudinally extending channels therein, each supporting a plurality of bobbins with the butt portion thereof adjacent the periphery of the drum, a casing enclosing the drum and having a filling opening and an exit opening through which the bobbins drop to a supporting shelf in a discharge position, a closure shield to close the exit opening during filling of the drum, and indexing means including a ratchet and pawl for stepping the drum to move the channels into alignment with the exit opening; and means feeding the bobbins from the shelf to a reservoir for a donning device including a driven belt having sockets to receive the bobbins on said shelf.

30. A device for supplying empty bobbins to a reservoir for a donning device for applying said bobbins to a row of spindles supported on a spinning frame comprising a carriage movable on the spinning frame along a path parallel to the spindles; a supply of empty bobbins on the carriage comprising an elongate drum having a plurality of longitudinally extending channels therein, each supporting a plurality of bobbins with the butt portion thereof adjacent the periphery of the drum, a casing enclosing the drum and having an exit opening through which the bobbins drop to a discharge position, and indexing means for stepping the drum to move the channels into alignment with the exit opening; means feeding the bobbins from the discharge position to a reservoir for a donning device, said means including a belt having sockets to receive said bobbins; means, including a slip clutch, driving the belt at a speed to feed bobbins to the reservoir at a rate greater than the operation of the doffing means to maintain the reservoir full; and means controlled by the movement of the last bobbin from discharge position by said belt for actuating the index means to step the drum to position another row of bobbins in discharge position.

31. A device for donning empty bobbins on a row of spindles supported on a spinning frame comprising a carriage; means including rollers mounting the carriage on the spinning frame to move along a path parallel to the spindles; supply means for empty bobbins on the carriage comprising an elongate drum rotatably mounted on a cradle carried by the carriage, said drum having a plurality of longitudinally extending channels therein, each supporting a plurality of bobbins with the butt portion thereof adjacent the periphery of the drum, a casing enclosing the drum and having an exit opening through which the bobbins drop to a supporting shelf in a discharge position, and indexing means including a ratchet and pawl for stepping the drum to move the channels into alignment with the exit opening; means feeding the bobbins from the shelf to a reservoir for a donning device, said means including a belt carried by the cradle and having sockets to receive the bobbins on said shelf and means, including one of the rollers and a slip clutch, for driving the belt at a speed to feed bobbins to the reservoir at a rate greater than the operation of the doffing means to maintain the reservoir full; and means controlled by the movement of the last bobbin from discharge position by said belt for actuating the ratchet and pawl means to move to step the drum to position a new supply of bobbins in discharge position.

32. A device for supplying empty bobbins to be donned on a row of spindles supported on a spinning frame comprising a carriage; means including rollers mounting the carriage on the spinning frame to move along a path parallel to the spindles; supply means for empty bobbins on the carriage comprising an elongate drum rotatably mounted on a cradle carried by the carriage, said drum having a plurality of longitudinally extending channels therein, each supporting a plurality of bobbins in side-by-side relation with the butt portion thereof adjacent the periphery of the drum, a casing enclosing the drum and having an exit opening through which the bobbins drop to a supporting shelf in a discharge position, and indexing means including a ratchet and pawl for stepping the drum to move the channels into alignment with the exit opening; means feeding the bobbins from a shelf to a reservoir for a donning device, said means including a belt carried by the cradle and having sockets to receive the bobbins on said shelf and means, including one of the rollers and a slip clutch, for driving the belt at a speed to feed bobbins to the reservoir at a rate greater than the operation of the donning means to maintain the reservoir full; and means controlled by the movement of the last bobbin from discharge position for actuating the ratchet and pawl means to move to step the drum to position a new supply of bobbins in discharge position, said means also stopping the belt until the new supply of bobbins is in position.

33. A device for supplying empty bobbins to be donned on a row of spindles supported on a spinning frame comprising a carriage; means, including rollers, for mounting the carriage on the spinning frame to move along a path parallel to the spindles; supply means for empty bobbins on the carriage, said supply comprising a plurality of housings detachably mounted on the carriage for removal and replacement, each having vertically disposed, parallel channels for holding the bobbins with their butts aligned; means feeding the bobbins from the supply to a reservoir for a donning device adapted to position a bobbin over a spindle, said feeding means including belt means having bobbin receiving sockets disposed below said row of bobbins to receive bobbins from the channels and to elevate the bobbins and deposit said bobbins in a chute leading to said reservoir; and drive means including one of said rollers for driving the belt in response to movement of the carriage for feeding said bobbins to said reservoir, said chute having means to deliver the bobbins butt down to said reservoir.

34. A device for donning empty bobbins on a row of spindles supported on a spinning frame comprising a carriage; means mounting the carriage on the spinning frame to move along a path parallel to the spindles; a supply of empty bobbins on the carriage, said supply comprising a plurality of vertically disposed, parallel bobbin holding channels from which the bobbins drop by gravity; means feeding the bobbins from the supply to a reservoir for a donning device adapted to position a bobbin over a spindle, said feeding means including a pair of belts having bobbin receiving sockets disposed below said rows of bobbins to receive bobbins from the channels, said belts being spaced apart a distance to permit the sockets thereon to simultaneously engage the upper and lower portions of the bobbins and feed said bobbins seriatim to said reservoir; and drive means for driving said belts in response to movement of the carriage for feeding said bobbins to said reservoir.

35. A device for supplying empty bobbins to be donned on a row of spindles supported on a spinning frame comprising a carriage; means, including rollers, for mounting the carriage on the spinning frame to move along a path parallel to the spindles; supply means for holding empty bobbins on the carriage, said supply means comprising a base disposed on the top of the carriage, a plurality of housings detachably mounted on the base for removal and replacement, each having vertically disposed, parallel channels for holding the bobbins with their butts aligned; means feeding the bobbins from the supply to a reservoir for a donning device adapted to position a bobbin over a spindle, said feeding means including a pair of belts each having bobbin receiving sockets, means supporting said belts on said base in parallel relation to receive bobbins from the channels with the sockets engaging the bobbins adjacent each end thereof, said belts passing over elevated sprockets to elevate the bobbins and deliver said bobbins to said reservoir; and drive means including one of said rollers for driving the belt in response to movement of the carriage for feeding said bobbins to said reservoir.

36. A device for supplying empty bobbins to be donned on a row of spindles supported on a spinning frame comprising a carriage; means, including rollers, for mounting the carriage on the spinning frame to move along a path parallel to the spindles; supply means for holding empty bobbins on the carriage, said supply means comprising a plurality of readily handled housings, each having parallel channels open at the bottom for holding the bobbins in proper alignment; removable closure means for closing said open bottoms, said means being removed to permit the bobbins to fall by gravity; a base carried by the top of the carriage and having an elevated front portion, means releasably securing said housings on the base with the channels in vertical position; means feeding the bobbins from the supply means to a reservoir for a donning device adapted to position a bobbin over a spindle, said feeding means including belt means having bobbin receiving sockets disposed on said base below said row of bobbins to receive bobbins from the channels and to elevate the bobbins in the elevated front portion of the base and deliver said bobbins to said reservoir; and drive means including one of said rollers for driving the belt in response to movement of the carriage for feeding said bobbins to said reservoir.

37. A device for supplying empty bobbins to be donned on a row of spindles supported on a spinning frame comprising a carriage; means, including rollers, for mounting the carriage on the spinning frame to move along a path parallel to the spindles; a base carried by the top of said carriage; supply means for holding empty bobbins, said supply means being disposed above said base and having vertically disposed, parallel channels for holding the bobbins in proper side-by-side alignment; means feeding the bobbins from the supply means to a reservoir for a donning device adapted to position a bobbin over a spindle, said feeding means including belt means having bobbin

receiving sockets disposed below said channels to receive bobbins therefrom and deliver said bobbins to said reservoir; and intermittently operated drive means for driving the belt for feeding a bobbin to said reservoir for each bobbin fed to bobbin applying position.

38. A device for supplying empty bobbins to be donned on a row of spindles supported on a spinning frame comprising a carriage; means mounting the carriage on the spinning frame to move along a path parallel to the spindles; a supply of empty bobbins on the carriage, said supply comprising a plurality of vertically disposed, parallel bobbin holding channels; means feeding the bobbins from the supply to a reservoir for a donning device adapted to position a bobbin over a spindle, said feeding means including belt means having bobbin receiving sockets disposed below said rows of bobbins to receive bobbins from the channels and feed said bobbins seriatim to said reservoir, the spacing of said channels being slightly different than the spacing of the sockets whereby the weight of the bobbins in the channels is applied to the bobbins in the sockets at points displaced from the axis thereof and provide a lateral component of the force in the direction of movement of the belt; and means for driving the belt in response to movement of the carriage for feeding said bobbins to said reservoir.

39. A device for supplying empty bobbins to be donned on a row of spindles supported on a spinning frame comprising a carriage; means mounting the carriage on the spinning frame to move along a path parallel to the spindles; a supply of empty bobbins on the carriage, said supply comprising a plurality of vertically disposed, parallel bobbin holding channels from which the bobbins drop by gravity; means feeding the bobbins from the supply to a reservoir for a donning device adapted to position a bobbin over a spindle, said feeding means including link belt means having bobbin receiving sockets disposed below said rows of bobbins to receive bobbins from the channels and feed said bobbins seriatim to said reservoir; means including an intermittently operated clutch for driving the belt in response to movement of the carriage; and actuating means controlled by the donning means for actuating said clutch for each operation of the donning device to feed a bobbin to said reservoir.

40. A device for donning empty bobbins on a row of spindles supported on a spinning frame, comprising a carriage mounted on the spinning frame to move along a path parallel to the spindles; means mounting a reservoir and a bobbin applying means on the carriage for movement from a retracted position to a normal bobbin applying position in which the bobbin applying means is disposed in cooperative relation with said spindles; means holding said bobbin applying means and reservoir in retracted position; and means controlling movement thereof to said normal position.

41. A device for donning empty bobbins on a row of spindles supported on a spinning frame comprising a carriage mounted on the spinning frame to move along a path parallel to the spindles; means mounting a reservoir and a bobbin applying means on the carriage for movement from a retracted position to a bobbin applying position in which the bobbin applying means is disposed in cooperative relation with said spindles, said reservoir having a plurality of bobbins therein for supplying bobbins to said bobbin applying position and said bobbin applying means including means for supporting bobbins in said applying position with the bobbins disposed above the spindles; resilient means for applying pressure to the bobbin supported in bobbin applying position to cause the bobbin to be impaled on an empty spindle when the means supporting the bobbin is withdrawn; and means controlled by said spindles for energizing the resilient means and for withdrawing the support and permitting the resilient means to impale the bobbin on the spindle disposed below the applying position.

42. A device for donning empty bobbins on a row of spindles supported on a spinning frame comprising a carriage mounted on the spinning frame to move along a path parallel to the spindles; means mounting a reservoir and a bobbin applying means on the carriage with the bobbin applying means disposed in cooperative relation with said spindles, said reservoir having a plurality of bobbins therein for supplying bobbins to said bobbin applying position and said bobbin applying means including means for supporting bobbins in said applying position with the bobbins disposed above the spindles; a normally retracted slide having means for engaging the top of the bobbin; resilient means on the slide for applying pressure to the bobbin supported in bobbin applying position when the means engaging the top of the bobbin is moved by the slide into engagement with the bobbin to cause the bobbin to be projected onto an empty spindle when the spindle passes below the applying position and the means supporting the bobbin is withdrawn; means actuated by the spindle for moving the slide and energizing the resilient means; and means actuated by the spindle for withdrawing the support and permitting the resilient means to impale the bobbin on the spindle disposed below the applying position.

43. A device for donning empty bobbins on a row of spindles supported on a spinning frame comprising a carriage mounted on the spinning frame to move along a path parallel to the spindles; means mounting a reservoir and a bobbin applying means on the carriage with the bobbin applying means disposed in cooperative relation with said spindles, said reservoir having a plurality of bobbins therein for supplying bobbins to said bobbin applying position and said bobbin applying means including means for supporting bobbins in said applying position with the bobbins disposed above the spindles; a normally retracted slide having means for engaging the top of the bobbin; resilient means on the slide for applying pressure to the bobbin supported in bobbin applying position when the means engaging the top of the bobbin is moved by the slide into engagement with the bobbin to cause the bobbin to be projected onto an empty spindle when the spindle passes below the applying position and the means supporting the bobbin is withdrawn; means actuated by the spindle for moving the slide and energizing the resilient means; means actuated by the spindle for withdrawing the support and permitting the resilient means to impale the bobbin on the spindle disposed below the applying position; and means engaging the first bobbin in the reservoir as an incident to the movement of the slide from retracted position to prevent said bobbin from moving into bobbin applying position until said slide has returned to normal retracted position.

44. A device for doffing and donning bobbins on a row of spindles supported on a spinning frame comprising a carriage mounted by rollers on the spinning frame to move along a path parallel to the spindles; doffing means on the forward part of the carriage for doffing wound packages from said spindles and depositing said packages in a receptacle therefor on the carriage; means mounting a reservoir and a bobbin applying means on the rear part of the carriage for movement from a retracted position to a bobbin applying position in which the bobbin applying means is disposed in cooperative relation with the spindles from which the packages have been doffed; means on the carriage for feeding empty bobbins to said reservoir to provide a plurality of bobbins therein to be delivered to said bobbin applying position, said bobbin applying means including means for supporting a bobbin in said applying position with the bobbin disposed above one of the spindles; resilient means for applying pressure to the bobbin supported in bobbin applying position to cause the bobbin to be projected onto an empty spindle when the spindle passes below the applying position and the means supporting the bobbin is withdrawn; means actuated by the spindle for energizing the resilient means; and means actuated by said empty spindle for energizing

the resilient means to apply pressure to the bobbin to impale the bobbin, withdrawing the support and actuating means to prevent delivery of a bobbin to said applying position.

45. A device for donning empty bobbins on a row of spindles supported on a spinning frame comprising a carriage mounted on the spinning frame to move along a path parallel to the spindles; a cradle pivotally mounted on the carriage and having a reservoir and a bobbin applying means mounted thereon for movement from a retracted position to a normal bobbin applying position in which the bobbin applying means is disposed in cooperative relation with said spindles; piston and cylinder means for moving the cradle and said bobbin applying means and reservoir to and from said retracted position; and valve means controlling said piston and cylinder means.

46. A device for donning empty bobbins on a row of spindles supported on a spinning frame comprising a carriage mounted on the spinning frame to move along a path parallel to the spindles; a bobbin supply means for feeding bobbins to a reservoir; means mounting the reservoir and a bobbin applying means on the bobbin supply means for movement from a retracted position to a bobbin applying position in which the bobbin applying means is disposed in cooperative relation with said spindles, said reservoir having a plurality of bobbins therein for supplying bobbins to said bobbin applying position and said bobbin applying means including means for supporting bobbins in said applying position with the bobbins disposed above the spindles; resilient means for applying pressure to the bobbin supported in bobbin applying position to cause the bobbin to be projected onto an empty spindle when the spindle passes below the applying position and the means supporting the bobbin is withdrawn; a feeler moved from normal position by the spindle for energizing the resilient means; and means actuated by the tip of the spindle passing through a gap including a trigger member for releasing the support and permitting the resilient means to impale the bobbin on the spindle disposed below the applying position.

47. A device for donning empty bobbins on a row of spindles supported on a spinning frame comprising a carriage mounted on the spinning frame to move along a path parallel to the spindles; means mounting a reservoir and a bobbin applying means on the carriage with the bobbin applying means disposed in cooperative relation with said spindles, said reservoir having a plurality of bobbins therein for supplying bobbins to said bobbin applying position and said bobbin applying means including means for supporting bobbins in said applying position with the bobbins disposed above the spindles, a normally retracted slide having resilient means for applying pressure to the bobbin supported in bobbin applying position to cause the bobbin to be impaled on an empty spindle when the means supporting the bobbin is withdrawn, means actuated by the base of the spindle for moving the slide toward the bobbin and energizing the resilient means, and a trip carried by the donning device and actuated by the tip of the spindle for withdrawing the support and permitting the resilient means to impale the bobbin on the spindle disposed below the applying position.

48. A device for donning empty bobbins on a row of spindles supported on a spinning frame comprising a carriage mounted on the spinning frame to move along a path parallel to the spindles; means mounting a reservoir and a bobbin applying means on the carriage with the bobbin applying means disposed in cooperative relation with said spindles, said reservoir having a plurality of bobbins therein for supplying bobbins to said bobbin applying position and said bobbin applying means including means for supporting bobbins in said applying position with the bobbins disposed above the spindles, a normally retracted slide having resilient means for applying pressure to the bobbin supported in bobbin applying position to cause the bobbin to be impaled on an empty spindle when the means supporting the bobbin is withdrawn, means actuated by the base of the spindle for moving the slide toward the bobbin and energizing the resilient means, a trip carried by the donning device and actuated by the tip of the spindle for withdrawing the support and permitting the resilient means to impale the bobbin on the spindle disposed below the applying position, and means operated as an incident to the movement of the slide from retracted position for blocking movement of the first bobbin in the reservoir to bobbin applying position until the bobbin in applying position has been donned.

49. A device for donning empty bobbins on a row of spindles supported on a spinning frame comprising a carriage; means, including rollers, mounting the carriage on the spinning frame to move along a path parallel to the spindles; bobbin supply means carried by a cradle pivotally mounted on the carriage; a reservoir and donning device mounted on the end of the cradle, said reservoir receiving bobbins from the bobbin supply means and delivering them to the donning device; means moving the cradle from a retracted position to a projected position in which the donning device is positioned over the spindle to be donned, said means including a belt having sockets to receive said bobbins; means, including one of the rollers and a slip clutch, driving the belt at a speed to feed bobbins to the reservoir at a rate greater than the operation of the doffing means to maintain the reservoir full; and means controlled by the movement of the last bobbin from discharge position by said belt for actuating a ratchet and pawl means to move to step the drum to position another row of bobbins in discharge position.

50. A device for donning empty bobbins on a row of spindles supported on a spinning frame comprising a carriage mounted on rails on the spinning frame to move along a path parallel to the spindles, said rails having control entrance and exit cams thereon; plate means slidably mounted on the carriage and having a reservoir and a bobbin applying means secured thereto for movement from a retracted position to a projected bobbin applying position in which the bobbin applying means is disposed in cooperative relation with said spindles; resilient means normally urging the plate means to projected position; detent means holding the plate means in retracted position; and cam follower means cooperating with said entrance cam for controlling movement of the plate means to projected position when the detent is released and with said exit cam to move the plate means into detained retracted position.

51. A device for donning empty bobbins on a row of spindles supported on a spinning frame comprising a carriage mounted on the spinning frame to move along a path parallel to the spindles and having bobbin supply means; a reservoir mounted on the carriage to receive bobbins from the supply means, said reservoir having a plurality of bobbins therein to be supplied to a donning device, said donning device having means for supporting a bobbin in an applying position with the bobbin disposed above one of the spindles, bobbin applying means comprising a slide normally urged to a retracted position and having a bobbin engaging member slidable thereon and normally urged toward the bobbin by resilient means; a star wheel engaging the spindle to be driven thereby in response to movement of the carriage; and means connected to the star wheel to be actuated and controlled thereby for moving the bobbin engaging member into contact with the tip end of the bobbin and energizing the resilient means to cause the bobbin to be projected onto an empty spindle as the spindle passes below the applying position, for withdrawing the support to release the bobbin and permitting the resilient means to impale the bobbin on the spindle disposed below the applying position, for preventing movement of a bobbin from the reservoir to applying position, and for feeding a bobbin to the reservoir for each bobbin donned by the device.

52. A device for donning empty bobbins on a row of spindles supported on a spinning frame comprising a carriage mounted on the spinning frame to move along a path parallel to the spindles and having bobbin supply means; a plate mounted on the carriage for movement from a retracted to a projected position; a reservoir mounted on the plate to receive bobbins from the supply means and deliver said bobbins to a donning device mounted on the plate, said donning device having means thereon for supporting a bobbin in an applying position with the bobbin disposed above a spindle when the plate is in projected position, bobbin applying means comprising a slide on the donning device normally urged to a retracted position and having a bobbin engaging member slidable thereon and normally urged toward the bobbin by resilient means; a star wheel engaging the spindles in said row of spindles to be driven thereby in response to movement of the carriage; and cam means connected to the star wheel to be actuated and controlled thereby for moving the bobbin engaging member into contact with the tip end of the bobbin and energizing the resilient means to cause the bobbin to be projected onto an empty spindle as the spindle passes below the applying position, for withdrawing the support to release the bobbin and permitting the resilient means to impale the bobbin on the spindle disposed below the applying position, for preventing movement of a bobbin from the reservoir to applying position, and for feeding a bobbin to the reservoir from the supply means for each bobbin donned by the device.

53. A device for donning empty bobbins on a row of spindles supported on a spinning frame comprising a carriage mounted on the spinning frame to move along a path parallel to the spindles; a reservoir mounted on the carriage and having a plurality of bobbins therein for supplying bobbins to an applying position; means, including a support member normally urged by spring means to a retracted position, for supporting bobbins in said applying position with the bobbins disposed above the spindles; bobbin applying means comprising a slide normally urged to a retracted position and having a bobbin engaging member slidable thereon and normally urged toward the bobbin by resilient means; a star wheel engaging the spindle to be driven thereby in response to movement of the carriage; cam means connected to the star wheel to be actuated thereby; a pivoted arm moved by said cam means for moving the bobbin engaging member into contact with the tip end of the bobbin and energizing the resilient means to cause the bobbin to be projected onto an empty spindle when the support member is released; and a second cam means connected to the star wheel for holding the support member in supporting position against said spring means and having a portion thereof controlled by the position of the spindle for releasing the supporting member for movement to retracted position by said spring means, withdrawing the means supporting the bobbin and releasing the bobbin and permitting the resilient means to impale the bobbin on the spindle disposed below the applying position.

54. A device for donning empty bobbins on a row of spindles supported on a spinning frame comprising a carriage mounted on the spinning frame to move along a path parallel to the spindles; belt means driven by the carriage for feeding empty bobbins to a reservoir mounted on the carriage, said reservoir having a plurality of bobbins therein for supplying bobbins to an applying position; means for supporting bobbins in said applying position with the bobbins disposed above the spindles; a slide having resilient means for applying pressure to the bobbin in applying position to cause the bobbin to be projected onto an empty spindle as the spindle passes below the applying position; a star wheel engaging the spindle to be driven thereby in response to movement of the carriage; cam means connected to the star wheel to be actuated thereby for moving the slide and energizing the resilient means and for intermittently operating the belt means; and a second cam means connected to the star wheel for withdrawing the support to release the bobbin and permitting the resilient means to impale the bobbin on the spindle disposed below the applying position.

55. A device for donning empty bobbins on a row of spindles supported on a spinning frame comprising a carriage mounted on the spinning frame to move along a path parallel to the spindles; a reservoir mounted on the carriage and having a plurality of bobbins therein for delivery from one end thereof to an applying position; means for supporting bobbins in said applying position with the bobbins disposed above the spindles; bobbin applying means including resilient means for applying pressure to the bobbin in applying position to cause the bobbin to be projected onto an empty spindle as the spindle passes below the applying position; a star wheel engaging the spindle to be driven thereby in response to movement of the carriage; cam means connected to the star wheel to be driven thereby; a pivoted arm actuated by the cam means for energizing the resilient means; and a pair of blocking members pivoted adjacent the delivery end of the support, wedge means connected to said pivoted arm to be actuated thereby to move said blocking members and prevent delivery of bobbins from said reservoir simultaneously with the energizing of said resilient means, whereby delivery of said bobbin is prevented until the resilient means has impaled the bobbin.

56. In a device for moving along a spinning frame having a row of spindles thereon for doffing and donning bobbins thereon, a donning means comprising a bobbin support means normally urged to a release position, a normally retracted slide having a resiliently mounted bobbin engaging member adapted to apply pressure to a bobbin on the support to impale the bobbin on a spindle upon movement of the support to release position, means operated as an incident to the movement of the slide from retracted position for blocking movement of a bobbin to the bobbin support means until the bobbin thereon has been impaled on the spindle, and cam means driven in unison for controlling the retraction of said support means, the applying of pressure to the bobbin to impale the same on the spindle and the blocking of bobbins from the support means until after the bobbin thereon has been impaled on the spindle.

57. In a device for moving along a spinning frame having a row of spindles thereon for doffing and donning bobbins thereon, a donning means comprising a bobbin support means normally urged to a release position, a normally retracted slide having a resiliently mounted bobbin engaging member adapted to apply pressure to a bobbin on the support to impale the bobbin on a spindle upon movement of the support to release position, means operated as an incident to the movement of the slide from retracted position for blocking movement of a bobbin to the bobbin support means until the bobbin thereon has been impaled on the spindle, and a star wheel driven by engagement with said spindles as the device moves along the spinning frame and having a plurality of cams secured thereto for movement in unison therewith for controlling the retraction of said support means, the applying of pressure to the bobbin to impale the same on the spindle and the blocking of bobbins from the support means until after the bobbin thereon has been impaled on the spindle.

58. In a device for moving along a spinning frame having a row of spindles thereon for doffing and donning bobbins thereon, a supply of empty bobbins, means feeding bobbins from said supply to a donning means, said donning means comprising a bobbin support means normally urged to a release position, a normally retracted slide having a resiliently mounted bobbin engaging member adapted to apply pressure to a bobbin on the support to impale the bobbin on a spindle upon movement

of the support to release position, means operated as an incident to the movement of the slide from retracted position for blocking movement of a bobbin to the bobbin support means until the bobbin thereon has been impaled on the spindle, and cam means driven in unison for controlling the retraction of said support means, the applying of pressure to the bobbin to impale the same on the spindle, blocking of bobbins from the support means until after the bobbin thereon has been impaled on the spindle, and operating the feeding means to feed a bobbin to the donning device for each operation thereof.

59. A device for donning empty bobbins on a row of spindles supported on a spinning frame comprising a carriage mounted on the spinning frame to move along a path parallel to the spindles; a donning device mounted on said carriage and having bobbin supporting means for supporting bobbins in an applying position with the bobbins disposed above the spindles and bobbin impaling means for projecting said bobbins and moving the bobbins along the spindles into driving relation therewith when the supporting means is released; and means moving with the carriage and engaging the bobbin at it moves along the spindle to impart rotation to the bobbin in a direction to facilitate its movement into said driving relation.

60. The invention as defined in claim 59 wherein the last means comprises a friction pad carried by the donning device and disposed in the path of movement of the bobbin to engage the bobbin moving under the action of the impaling means.

61. A device for donning empty bobbins on a row of spindles supported on a spinning frame comprising a carriage mounted on the spinning frame to move along a path parallel to the spindles; bobbin supply means mounted on the carriage and having feeding means for feeding a plurality of bobbins to a reservoir for supplying bobbins to an applying position; means for supporting bobbins in said applying position with the bobbins disposed above the spindles; bobbin applying means comprising a sliding member normally urged to a retracted position and having a bobbin engaging member slidable thereon and normally urged toward the bobbin by resilient means; a star wheel engaging the spindle to be driven thereby in response to movement of the carriage; cam means connected to the star wheel to be actuated thereby for moving the bobbin engaging member into contact with the tip end of the bobbin and energizing the resilient means to cause the bobbin to be projected onto an empty spindle when the means supporting the bobbin is withdrawn; a second cam means connected to the star wheel for withdrawing the means supporting the bobbin to release the bobbin and permittng the resilient means to impale the bobbin on the spindle disposed below the applying position; and means operated as an incident to the movement of the slide to retracted position for actuating the feeding means to feed a bobbin from the supply to said reservoir.

62. A device for donning empty bobbins on a row of spindles supported on a spinning frame comprising a carriage; means, including a pair of spaced rollers, mounting the carriage on the spinning frame to move along a path parallel to the spindles; a supply of empty bobbins on the carriage comprising an elongate drum having a plurality of longitudinally extending channels therein, each supporting a plurality of bobbins with the butt portion thereof adjacent the periphery of the drum, a casing enclosing the drum and having an exit opening through which the bobbins drop to a discharge position, and indexing means including a ratchet and pawl means for stepping the drum to move the channels into alignment with the exit opening; means feeding the bobbins from the discharge position to a reservoir for a donning device to position a bobbin over a spindle, said means including a belt having sockets to receive said bobbins; means, including one of the rollers and a slip clutch, driving the belt at a speed to feed bobbins to the reservoir at a rate greater than the operation of the doffing means to maintain the reservoir full; and means controlled by the movement of the last bobbin from discharge position by said belt for actuating the ratchet and pawl means to move to step the drum to position another row of bobbins in discharge position.

63. A device for donning empty bobbins on a row of spindles supported on a spinning frame comprising a carriage; means, including a pair of spaced rollers, mounting the carriage on the spinning frame to move along a path parallel to the spindles; a supply of empty bobbins on the carriage comprising an elongate drum having a plurality of rows of bobbins therein; ratchet and pawl means for stepping said drum to move a row of bobbins to a discharge position; means feeding the bobbins from the discharge position to a reservoir for a donning device to position a bobbin over a spindle, said means including a belt having sockets to receive said bobbins; means, including one of the rollers and a slip clutch, driving the belt at a speed to feed bobbins to the reservoir at a rate greater than the operation of the doffing means to maintain the reservoir full; and means controlled by the movement of the last bobbin from discharge position by said belt for actuating the ratchet and pawl means to move to step the drum to position another row of bobbins in discharge position.

64. A device for donning empty bobbins on a row of spindles supported on a spinning frame comprising a carriage; means mounting the carriage on the spinning frame to move along a path parallel to the spindles; a supply of empty bobbins on the carriage; means feeding the bobbins from the supply to a reservoir for a donning device to position a bobbin over a spindle, said means including a belt having sockets to receive a plurality of bobbins from the supply; and means, including a slip clutch, driving the belt at a speed to feed bobbins to the reservoir at a rate greater than the operation of the doffing means and operated in response to movement of the carriage along the spinning frame, said clutch slipping when the reservoir is full and automatically maintaining the reservoir in full condition.

65. A device for donning empty bobbins on a row of spindles supported on a spinning frame comprising a carriage; means mounting the carriage on the spinning frame to move along a path parallel to the spindles; a supply of empty bobbins on the carriage comprising an elongate rotatable drum having a plurality of rows of bobbins therein; means moving said rows of bobbins sequentially to a discharge position; means feeding the bobbins from the discharge position to a reservoir for a donning device to position a bobbin over a spindle, said means including a belt having sockets to receive a plurality of bobbins from the supply; and means, including a slip clutch, driving the belt at a speed to feed bobbins to the reservoir at a rate greater than the operation of the doffing means and operated in response to movement of the carriage along the spinning frame, said clutch sliping when the reservoir is full and automatically maintaining the reservoir in full condition.

66. A device for donning empty bobbins on a row of spindles supported on a spinning frame comprising a carriage; means mounting the carriage on the spinning frame to move along a path parallel to the spindles; a cradle pivotally mounted on the carriage; a supply of empty bobbins on the cradle; means carried by the cradle feeding the bobbins from the supply to a reservoir for a donning device mounted on the end of the cradle, said cradle pivoting to move the donning device from a retracted position to an applying position in which a bobbin is disposed over a spindle, said feed means including a belt having sockets to receive bobbins from the supply and feed the bobbins to the reservoir.

67. A device for donning empty bobbins on a row of

spindles supported on a spinning frame comprising a carriage; means, including rollers, mounting the carriage on the spinning frame to move along a path parallel to the spindles; a supply of empty bobbins on the carriage comprising a cradle pivotally mounted on the carriage; an elongate drum rotatably mounted on the cradle, said drum having a plurality of longitudinally extending channels therein, each supporting a plurality of bobbins with the butt portion thereof adjacent the periphery of the drum, a casing on the cradle enclosing the drum and having an exit opening through which the bobbins drop to a discharge position, and indexing means for stepping the drum to move the channels into alignment with the exit opening in the casing; and means, including a belt

having sockets to receive said bobbins, for feeding the bobbins from the discharge position to a reservoir for a donning device to position a bobbin over a spindle, said reservoir and donning device being mounted on the end of the cradle for movement by the cradle from a retracted to an operative bobbin applying position.

References Cited in the file of this patent

UNITED STATES PATENTS

1,122,417	Peterson	Dec. 29, 1914
1,127,674	Peterson	Feb. 9, 1915
2,886,940	Urano et al.	May 19, 1959
2,961,822	Prat	Nov. 29, 1960