United States Patent [19]

Sramek

[11] **3,815,603**

[45] **June 11, 1974**

[54] **DEPILATORY METHOD AND MEANS**

[76] Inventor: **Bohumir Sramek,** 19211 Edgehill Dr., Irvine, Calif. 92664

[22] Filed: **Oct. 16, 1972**

[21] Appl. No.: **298,178**

[52] **U.S. Cl.** **128/303.18,** 128/421
[51] **Int. Cl.** **A61b 17/40,** A61n 3/04
[58] **Field of Search** ..... 128/303.18, 419 R, 421

[56] **References Cited**

UNITED STATES PATENTS

2,444,173	6/1948	St. Pierre	128/303.18 X
3,054,405	9/1962	Tapper	128/303.18
3,160,159	12/1964	Howdy et al.	128/1 C X
3,255,753	6/1966	Wing	128/421

FOREIGN PATENTS OR APPLICATIONS

897,961	6/1962	Great Britain	128/303.14

OTHER PUBLICATIONS

Smith et al., "Electronarcosis by a Combination of Direct and Alternating Current", I N Amer. Jour. Med. Electronics, pp. 38–41, Jan.–Mar., 1965.

Primary Examiner—Channing L. Pace
Attorney, Agent, or Firm—Grover A. Frater

[57] **ABSTRACT**

A method by which to accelerate electrolytic destruction of hair. The method involves application to the hair papilla associated with the hair, of current having a unidirectional current component and a radio frequency current component. The unidirectional current produces ions which kill electrochemically. The radio frequency current accomplishes heating less than enough to result in radio frequency burning of the papilla but enough to accelerate the electrochemical processes. An apparatus furnishes unidirectional currents modulated at a radio frequency rate through an impedance changing circuit which constitutes a constant voltage source to the radio frequency generator and which constitutes a high impedance, constant current source to the body thereby to offer protection both to the subject and to the radio frequency generator.

12 Claims, 2 Drawing Figures

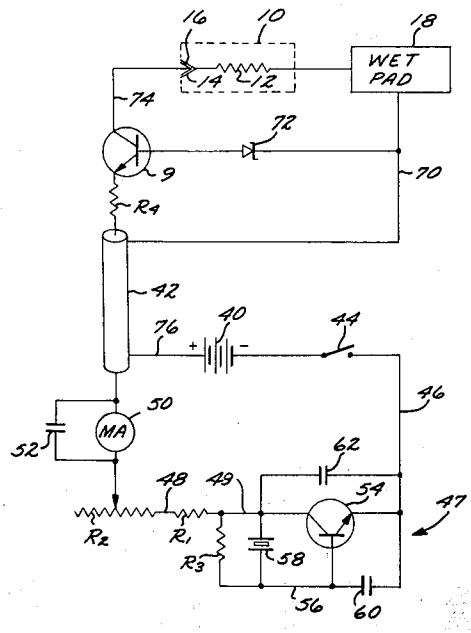

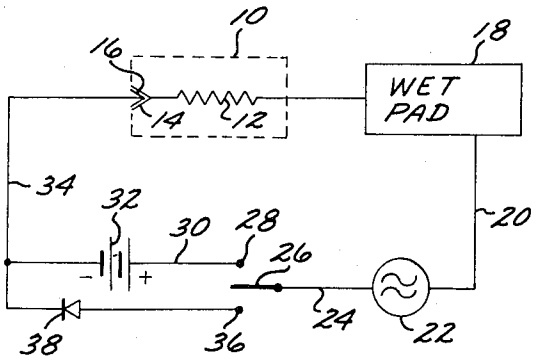
10
16
18
WET PAD
14
12
34
32
30
28
26
20
24
22
38
36

FIG.1

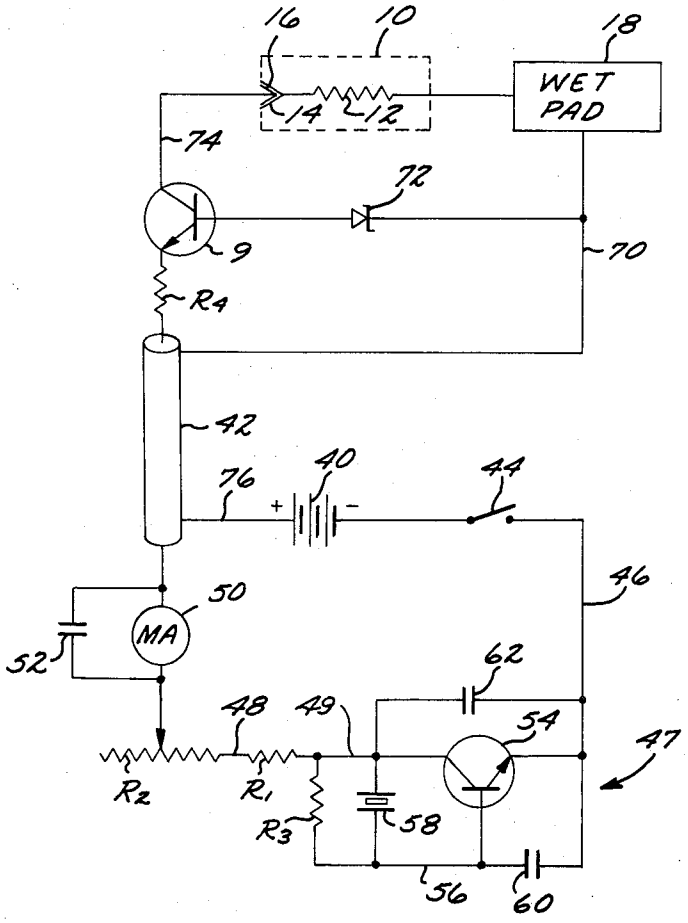
16
10
18
WET PAD
14
12
74
72
9
70
R4
42
76
40
44
46
50
MA
52
62
48
49
54
47
R2
R1
R3
58
56
60

FIG.2

DEPILATORY METHOD AND MEANS

This invention relates to an improved method of depilation and to improved depilatory apparatus.

Permanent removal of hair can be accomplished by destroying the papilla associated with the hair root. Destruction of the papilla can be accomplished chemically and the conditions for that chemical destruction can be established by dissociating water into hydrogen cations and hydroxile anions in the immediate vicinity of the papilla. The dissociation is accomplished by causing electric currents to flow through body liquid which is primarily water. To insure a high concentration of charge, electrolytic depilatory apparatus customarily employs a wet pad as a positive electrode through which electrical contact is made to the body water in the region of the hair to be destroyed but spaced from that hair. A fine wire probe is used as a negative electrode. It is inserted into the hair follicle to a point near the papilla associated with the root of the hair to be destroyed. The chemical killing action is proportional to the degree of water dissociation. The quantity of chemical action available for destroying the papilla is related directly to the number of ions that flow. If flow rate or current is low, then a longer time is required. If the time is to be shortened then current must be increased. However, the chemical action that results in destruction of papilla effects the nervous system to produce pain. It is approximately true that painfulness of the process increases in proportion to the effectiveness in destroying hair.

The papilla can also be destroyed by heating. While that process is not entirely understood, it is well-known that high frequency alternating currents can destroy cells, including those in the papilla. A "radio frequency burn" results. When such currents flow from the end of a needle inserted in a body of tissue, cells in the immediate vicinity of the point where current leaves that needle are burned in the way that they would be burned by the application of heat.

Both electrolysis and radio frequency heating have been employed in removing hair. Both are effective and both are painful. Some degree of success in reducing the pain appears to have been achieved by using those processes on an alternating basis so that unidirectional current is applied to the papilla for a succession of short periods and pulses of radio frequency currents are applied in the periods between them. That kind of alternation is said to make the whole process less painful. Another prior method involves omitting the electrolysis and relying on R. F. burning in a procedure that applies pulses of radio frequency currents such that amplitude and duration is increased in successive pulses. That approach is also said to be less painful. Another approach in the prior art was to combine electrolytic action with what appears to be an attempt to place the papilla within a high frequency electromagnetic field. It is not clear what effect, if any, was produced by the field.

In this invention, heating with radio frequency current is combined with electrolytic action. However, the level of radio frequency heating is maintained at a low value so that no radio frequency burning results. Instead, radio frequency heating is maintained at a lower level where its effect is to accelerate the chemical action between the ions and the cell to be destroyed. An electrically conductive probe is inserted into the subject's skin, advantageously through a hair follicle down to the region of the papilla. A second electrode is placed over a nearby area of the subject's skin. Current is then made to flow between those electrodes. That current has a unidirectional component and a high frequency alternating component which are added according to the electrical law of superposition. The resultant current is effective to produce papilla destruction with less current than would be required if the alternating currents were not superimposed on the unidirectional current. Lesser current means less pain. More importantly, combining the alternating and unidirectional currents makes it possible to accomplish papilla destruction in shorter time than is required when unidirectional current is used alone. That means that papilla destruction can be accomplished with shorter pain periods.

If the peak value of the alternating current exceeds the value of the unidirectional current then polarity will be changed for short periods and current will be reversed for those short intervals. The preferred method is to superimpose alternating currents at radio frequencies upon a unidirectional voltage such that the peak value of the alternating component is less than the DC value. Polarity is not changed when that is done.

One way to supply such a composite voltage is to generate a series of unidirectional pulses at high frequency. Another is to rectify a radio frequency signal. The method of the invention may employ any of these approaches and an apparatus for practicing those different approaches is shown in FIG. **1.** However, a preferred apparatus for generating the voltage, and for use in practicing the method of the invention, is illustrated in FIG. **2.** The circuit and apparatus there shown has the advantage that the unidirectional and radio frequency components may be altered simultaneously without changing the ratio of DC to AC voltage. It is arranged so that the subject's body sees a high impedance current source for increased safety. The apparatus has the added advantage that it can be produced at low cost with a high order of reliability.

An object of the invention is to provide an improved method for removal of hair by destruction of papilla by chemical means. It is an object to accelerate the chemical action by localized heating. A related object is to insure that the means for accelerating heating does not become an instrument for producing R. F. burning. Other objects are to provide an apparatus which is simple to use, is safe and is reliable. A primary object, of course, is to provide an effective hair removal means that gets the job done with little or no pain.

In the drawings:

FIG. **1** is a generalized schematic diagram of apparatus embodying the invention; and

FIG. **2** is a circuit diagram of a preferred embodiment of the invention.

In FIG. **1** the dash-line **10** represents a portion of the subject's body. The resistor **12** represents the impedance presented by that portion of the body to the flow of electric current. The impedance is primarily resistive. The symbol **14** represents a hair follicle which probe **16** enters to make electrical contact with the body in the region of the papilla associated with the root of the hair that extends from follicle **14** and which it is the purpose of the apparatus to destroy. A short distance away from that follicle a wet pad **18** is applied to the subject's body. Moisture in the pad joins with the

moisture at the surface in the subject's skin to complete an electrical circuit from the probe **16** to the pad **18.** The probe and the pad and the manner in which they are associated with the body are old and well-known. But the manner here taught of energizing that circuit with unidirectional and radio frequency currents is novel. The generalized circuit arrangements are shown in FIG. **1.** Pad **18** is connected by line **20** through an adjustable current limiter **21** to one side of a radio frequency alternating voltage generator **22.** The output of the generator is applied by line **24** to a single pole double throw switch **26** which, if thrown to pole **28,** completes a circuit from the generator through conductor **30** and a unidirectional voltage source **32** to line **34** which connects to the probe **16.** Thus connected a current is caused to flow through the patient's body which is described as a unidirectional current on which an alternating current is superimposed.

If the movable contact of switch **26** is thrown instead to pole **36** then a circuit will have been completed from pad **18** through line **20,** alternating radio frequency generator **22,** line **24,** switch **26,** rectifier **38,** and conductor **34** to probe **16.** By that circuit a half wave rectified current in the form of pulses at radio frequency flows through the circuit. The resulting wave has both a DC and an AC component and is not unlike the current that flows through the subject when, in the other switch position, the alternating radio frequency generator **22** and the battery **32** are connected in series. In the preferred method of the invention the peak value of the alternating voltage is no greater than the battery voltage so that current flow is unidirectional notwithstanding its change in amplitude.

The circuit illustrated in FIG. **2** is capable of operation according to that preferred method. In fact, it can only operate according to the preferred method. Several important advantages are attained by this circuit. First it uses few components all of which are relatively inexpensive whereby cost is minimized. Reliability is enhanced because there are fewer parts and fewer connections to fail. It will be apparent from the description of the circuit that transistor **9** serves as a constant current source for the body and a constant voltage source for the oscillator. Its high output impedance serves to protect the body against excessive current flow whereas its low input impedance helps to insure a constant voltage supply to the oscillator and stability in its operation.

Safety is also enhanced by the fact that the body, the constant current source **9,** the crystal controlled oscillator **47,** the current adjuster R2 and the foot switch **44** are all in series so that the system tends to be fail safe in the event of a failure to produce an open circuit. That circuit arrangement makes it possible to turn the current off while the probe is being inserted into the follicle, to turn the current on only after the probe has been inserted, and to turn it off before the probe is withdrawn. Permitting the flow only while the probe is fully inserted is advantageous for several reasons. Having the current turned on while the probe is being inserted or withdrawn results in scarring and may result in pain at a time when no useful purpose is being served by current flow.

Stability is promoted in this circuit by the use of a properly terminated coaxial cable **42** which is used to transfer the direct current and the radio frequency current components to the probe without reflection and without radiation. That is made possible by the use of transistor **9** and resistor R4.

In FIG. **2** the numeral **10** represents the subject's body. The resistor **12,** as in the case of FIG. **1,** represents the impedance offered by the body to flow of current from the probe **16** to the wet pad **18.** Power for the unit is supplied by battery **40** whose positive terminal is connected to the shield of coaxial cable **42** and the wet pad **18** and whose negative terminal is connected through a normally open foot switch **44** to line **46** at one side of crystal oscillator **48.** That crystal oscillator is connected between lines **46** and a line **48** which includes in series the resistor R1 and a rheostat R2. The other side of the rheostat is connected through a milliammeter **50** to the center conductor of the coaxial cable **42.** A bypass capacitor **52** is connected across the milliammeter to bypass the radio frequency component of the current whereby average current values are shown.

The crystal oscillator **47** comprises an NPN transistor **54** whose emitter is connected to line **46.** The collector is connected to line **49.** The base of the transistor is connected by a line **56** to a resistor R3 whose other end is connected to line **49.** A piezoelectric crystal **58** is connected in parallel with that resistor from the base to the collector of the transistor. The base and emitter are connected through a capacitor **60.** Another capacitor **62** is connected between the emitter and the collector of the transistor **54.** Together the two capacitors **60** and **62** form a high frequency voltage divider for controlling the amount of feedback signal applied to the crystal and to the base-emitter junction. The crystal controlled oscillator is effective to generate unidirectional signals varying in amplitude at radio frequencies and more particularly at 13.560 MHz which has been assigned by the Federal Communications Commission for such purposes. The current through the oscillator does not alternate; it undulates without changing direction. The peak amplitude of the alternating component is almost equal to the unidirectional component.

At its output the center conductor of the coaxial cable is connected through a resistor R4 to the emitter of NPN transistor **9.** The shield of the coaxial cable is connected to a line **70.** Tha line connects to the wet pad **18.** The base of transistor **9** is connected to that line **70** through a Zener diode **72.** Finally, the circuit is completed by connection from probe **16** through line **74** to the collector of transistor **9.**

The battery **40** supplies 27 volts to the circuit. The Zener diode **72** is a 22 volt unit. Tracing the DC circuit, the positive terminal of the battery is connected to the outer conductor of shield **42** by conductor **76.** Line **70** connects the shield to one side of the 22 volt Zener diode which is polarized so that the base of the transistor is maintained at a potential of −22 volts. The emitter base junction of transistor **9** is approximately 0.8 volts so that the potential of the emitter is a negative 22.8 volts. That arrangement of battery **40,** Zener diode **72** and the base-emitter junction of transistor **9** serves as a constant voltage source for the application of 4.2 volts to the network consisting of the crystal oscillator, the milliammeter **50,** and the current control resistors R1 and R2 and coaxial cable terminating resistor R4. R4 combines with the impedance of the base-emitter junction of transistor **9** and the impedance across the Zener diode **72** to provide a matching termination for the coaxial cable **42.** In practice, R4 has a

value of 35 ohms in a circuit using a 50 ohm coaxial cable.

The voltage drops across the Zener diode and the emitter base junction of transistor **9** are constant as is the voltage across the battery. Therefore, the average current flow in the generator circuit is affected substantially only by the value of adjustable resistor **R2.** Thus, the current flowing through transistor **9** and the subject is affected only by the adjustment of **R2.** The resistance of the subject may vary greatly from time to time and from place to place on the subject's body depending primarily upon the degree of perspiration and the character of the flesh through which current flows. The body resistance **12** is usually about 10 thousand ohms but may vary from 1 to 20 thousand phms. The circuit arrangement maintains substantially uniform current through the subject despite those changes. That means that the voltage across the subject varies over a ratio of about 20:1. That voltage is in series with, and has polarity opposite to, the 22 volts across the Zener diode. As long as the voltage across the subject is less than 22 volts the collector is properly biased. The collector current is relatively independent of base-collector bias; the combination of Zener diode and transistor **9** constitutes a high impedance source to the subject's resistance **12.**

This feature is important. It means that a milliammeter connected in the circuit at a distance from the probe is a dependable indicator of the quality of current to which the patient is subjected. Since the radio frequency component can't exceed the unidirectional component, only a DC meter is required. Such a meter is also an accurate indicator of radio frequency component because the two components always have the same relative value. Control is easy because current remains essentially the same notwithstanding changes in internal resistance of the subject and changes in contact resistance between the body and the wet pad electrode.

Although I have shown and described certain specific embodiments of my invention, I am fully aware that many modifications thereof are possible. My invention, therefore, is not to be restricted except insofar as is necessitated by the following claims.

I claim:

1. The method of removing hair from a subject by chemical destruction of the papilla associated with the hair root which comprises the steps of:

placing a first electrode in the immediate vicinity of the papilla and a second electrode in direct electrically conductive contact with the subject at a point removed from the hair and its papilla;

causing electric currents to flow through the subject by applying across said first and second electrodes a high frequency alternating voltage super-imposed on a unidirectional voltage.

2. In an electrical depilatory apparatus of the kind in which electric potential is impressed across electrodes to be applied to a subject, one in the vicinity of a papilla to be destroyed and the other nearby, the improvement which comprises:

a first electrode means in the form of a metallic stylet for conducting electric currents below the surface of the skin of a subject in the vicinity of a papilla;

a second electrode means in the form of an electrically conductive pad capable of overlying an area of a subject's skin for conducting currents between said pad and said area; and

potential application means for applying across said first and second electrodes a potential having a unidirectional component and an alternating component at radio frequency.

3. The invention defined in claim **2,** said potential application means comprising the series circuit combination of a unidirectional voltage source, a radio frequency undulating voltage source and a variable resistor whereby adjustment of the resistor controls the flow of both unidirectional and alternating components of current flow simultaneously.

4. The invention defined in claim **3** in which said potential application means further comprises an active element of the kind having a primary flowpath and a control electrode, the primary flowpath being connected in series in said series circuit combination; and means for impressing said alternating voltage and at least a portion of said unidirectional potential on said control electrode.

5. The invention defined in claim **2** in which said potential application means comprises: a transistor having its base to collector junction connected across said electrodes; a fixed voltage means for developing a fixed voltage drop connected in series between the base of said transistor and one electrode; the series circuit combination of a unidirectional voltage source, greater than said fixed voltage drop; and a radio frequency voltage generator connected from said one electrode to the emitter of said transistor.

6. The invention defined in claim **5** in which said series circuit combination further comprises a variable series resistor and a series operating switch.

7. The invention defined in claim **6** in which said fixed voltage source means comprises a Zener diode.

8. The invention defined in claim **6** in which said series circuit further comprises a length of coaxial cable the center conductor of which is connected to the emitter of said transistor and the outer conductor of which is connected to said one electrode.

9. The invention defined in claim **8** in which said series circuit further comprises a current meter.

10. The invention defined in claim **8** in which said radio frequency voltage generator comprises a crystal oscillator of the kind that permits flow of undulating unidirectional current whose alternating component has peak value no greater than its unidirectional component.

11. The invention defined in claim **10** in which the crystal oscillator comprises an oscillator transistor having its collector and emitter connected in series in said series circuit combination, a piezoelectric crystal connected between the base of the oscillator transistor and one of its collector and emitter elements, and a first capacitor connected from the base of the oscillator transistor to the other of its collector and emitter elements, and a second capacitor connected from the collector of the oscillator transistor to its emitter.

12. In combination:

a pad electrode;

a Zener diode;

a length of coaxial cable having its outer conductor connected to said pad electrode and to one side of said diode;

a radio frequency generator comprising an NPN oscillator transistor, a first capacitor connected from

the emitter to the collector of the oscillator transistor, a second capacitor connected from the emitter to the base of the oscillator transistor, a piezoelectric crystal connected from the base to the collector of the oscillator transistor, and a first resistor shunting said crystal;

a source of unidirectional potential connected in series with said radio frequency generator between the outer and inner conductors of the coaxial cable such that the positive side of the source and the emitter of the oscillator transistor are toward the outer conductor of the cable;

a switch and a variable resistor in series with said source of unidirectional potential and said oscillator transistor between said inner and outer conductors of said cable;

a probe electrode; and

an impedance transforming NPN transistor having its collector connected to said probe electrode, having its base connected to the other side of said Zener diode, and having its emitter connected to the center conductor of said coaxial cable.

* * * * *