United States Patent

Baldrich

[15] **3,706,165**

[45] **Dec. 19, 1972**

[54] **SUPPORT ASSEMBLY FOR THE LOUVER OF JALOUSIE WINDOWS**

[72] Inventor: **Manuel Ray Baldrich,** G.P.O. Box 3443, San Juan, P.R.

[22] Filed: **May 20, 1971**

[21] Appl. No.: **145,197**

[52] **U.S. Cl.** **49/403,** 49/371, 49/91

[51] **Int. Cl.** **E06b 7/08**

[58] **Field of Search**.....49/91, 403, 74–78, 49/82, 83, 86, 87

[56] **References Cited**

UNITED STATES PATENTS

3,591,980	7/1971	Cheng	49/91
2,884,848	5/1959	Perlin	49/403
2,375,608	4/1968	Thompson	49/403

Primary Examiner—Kenneth Downey

Attorney—Scrivener, Parker, Scrivener and Clarke

[57] **ABSTRACT**

A louver for a jalousie window is provided with an end clip by which the louver is pivotally supported on the window frame and to which rotary movement is imparted to operate the louvers. The clip is integrally formed from a synthetic plastic material and has two pins with enlarged heads which are transversely compressible providing, respectively, pivotal support means and connection to the louver operating means, allowing the clip to be easily installed by an unskilled person using only manual pressure, and has a washer integrally formed at the base of each pin which separates the clip from its support and reduces friction between them, and has a flexible fin formed on the bottom surface of the clip to seal the joint between the clip and its support. Two elongated strips are provided in the window opening which, respectively, support the pivot pins and provide the operating means for rotating the clips, these strips being flexible to permit them to be coiled for shipment from factory to job.

2 Claims, 10 Drawing Figures

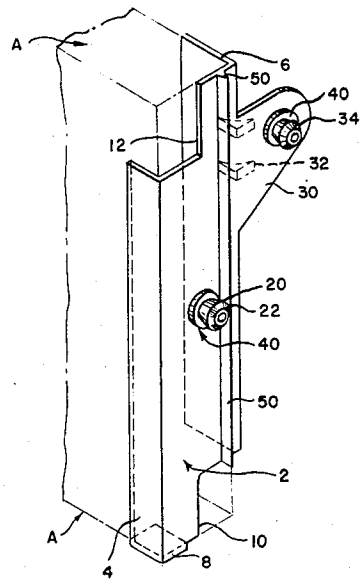

PATENTED DEC 19 1972

3,706,165

SHEET 1 OF 2

Fig. 1

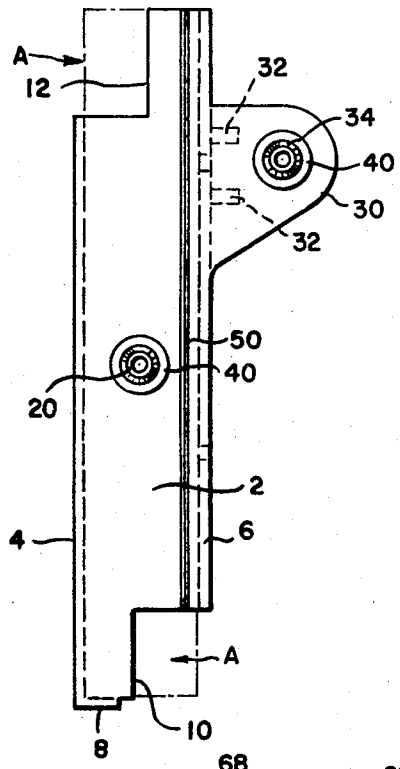

Fig. 2

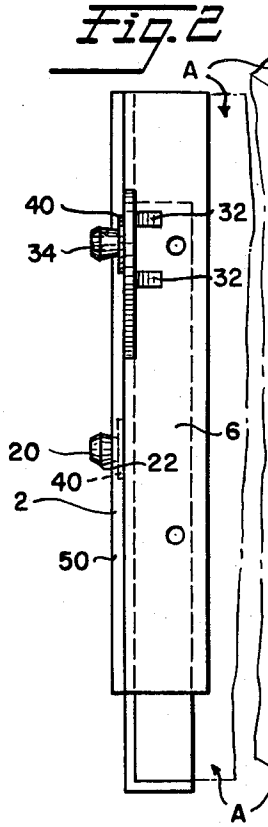

Fig. 3

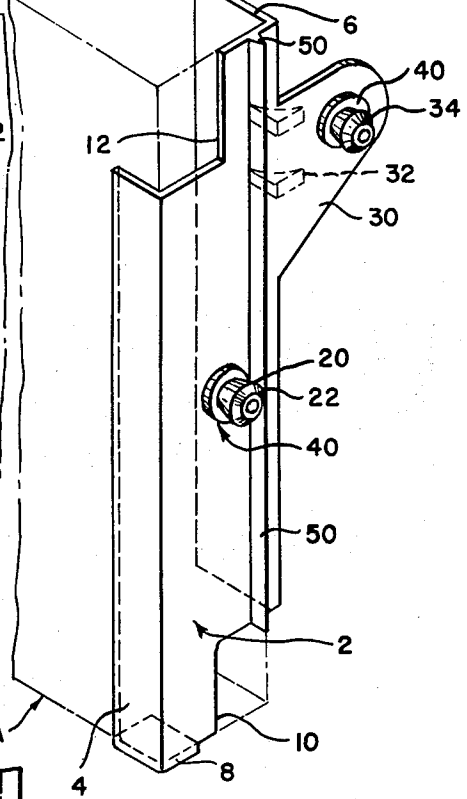

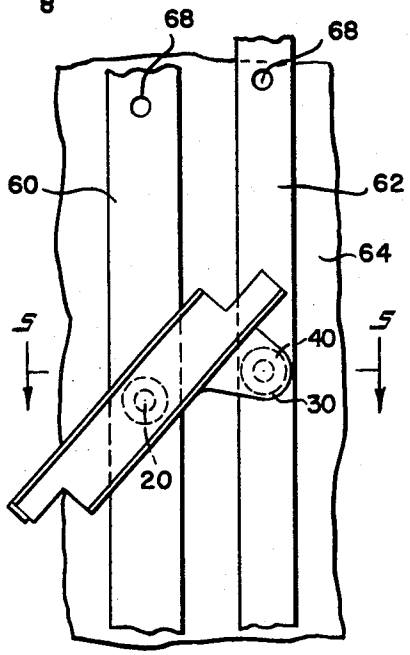

Fig. 4

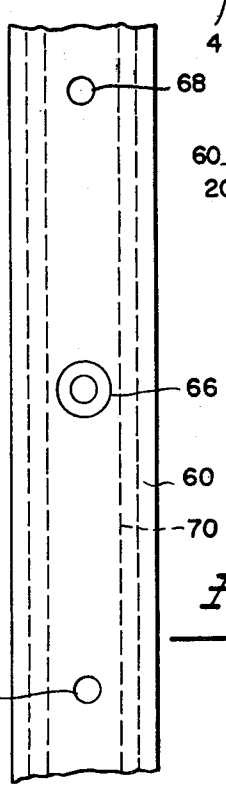

Fig. 6

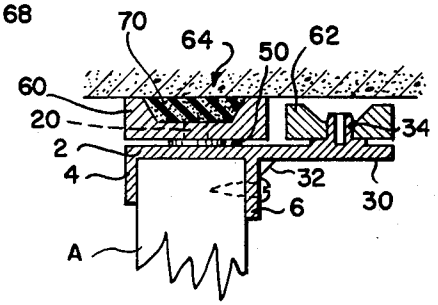

Fig. 5

INVENTOR

MANUEL RAY

BY

Scrivener Parker Scrivener & Clarke

ATTORNEYS

Fig. 7

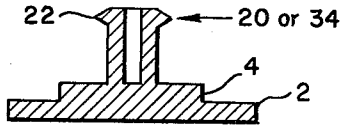

Fig. 8

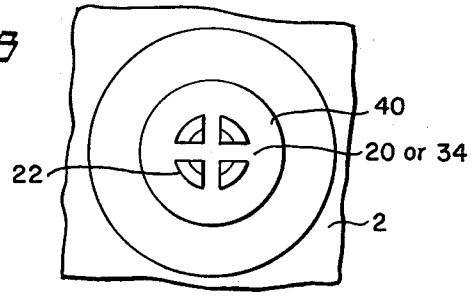

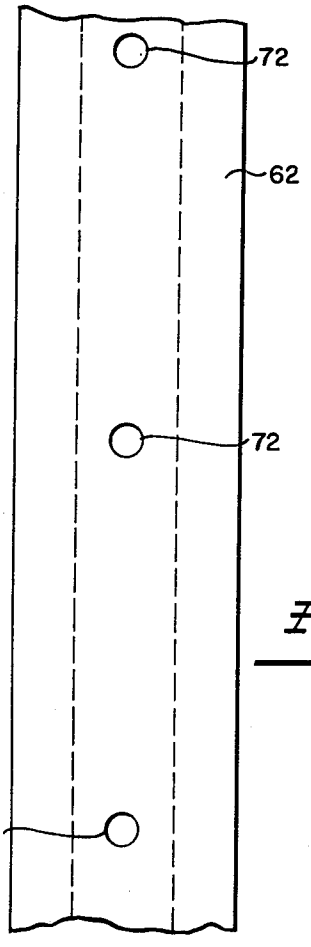

Fig. 10

Fig. 9

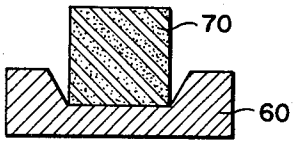

INVENTOR
MANUEL RAY

BY
Scrivener Parker Scrivener & Clarke
ATTORNEYS

SUPPORT ASSEMBLY FOR THE LOUVER OF JALOUSIE WINDOWS

DESCRIPTION OF THE DRAWINGS

FIGS. 1, 2 and 3 are, respectively, end, side and perspective views of the clip, provided by the invention for providing end support and rotary movement to a louver forming part of a jalousie window;

FIG. 4 is a view showing the attachment of a clip to the supporting and operating strips;

FIG. 5 is a sectional view taken on line 5—5 of FIG. 4;

FIG. 6 is an elevational view of the fixed supporting strip;

FIG. 7 is a sectional view of a preferred form of pin having retractable thickness;

FIG. 8 is a plan view of an alternative pin construction;

FIG. 9 is a transverse cross sectional view of the fixed supporting strip with the compressible sealing material attached thereto, and

FIG. 10 is an elevational view of the movable strip.

DESCRIPTION OF THE INVENTION

The invention relates broadly to windows of the well-known jalousie type in which there is provided within the window opening a vertical series of horizontal, elongated, relatively narrow strips, known as louvers, which are usually made of glass, plastic or the like and which are supported at their ends on horizontal pivots whereby they may be simultaneously rotated to open, closed and intermediate positions. It is usual to provide at each end of each louver a clip which is attached to the end of the louver and which is provided with pivotal supporting means and lever means by which the clip and louver may be moved about the pivotal support. In known constructions the pivotal supporting means is mounted for rotational movement in the side wall of the window frame as by being pivotally mounted on a fixed vertical rod or other support, and the lever means is connected to a vertical rod which is mounted for longitudinal movement with respect to the side wall of the window frame whereby rotational movement about their pivotal supports is imparted to all of the louvers. Heretofore, the pivotal connections between the clips and the supporting and the movable vertical rods were made by separate rivets, requiring manufacturing equipment to economically build new windows and skilled mechanics with specialized tools for repairs or replacements. This assembly, consisting of the louver, the end clip and the fixed and movable supporting and operating means, such as the rods of the prior art, constitutes the assembly to which the invention relates and to which it is an improvement.

The first, and possibly the most important, part of the supporting and operating assembly provided by the invention is the new and improved clip which is mounted on each end of a louver. In accordance with the invention this clip and all of its parts is formed integrally of a single piece of a synthetic plastic material which may be molded, hot stamped, or formed in any other suitable manner. Such a clip is illustrated in the drawings and comprises a body having the bottom wall 2 and side walls 4, 6, these parts being of such size and so related that the clip receives the end part of a louver A, with the end surface of the louver engaging the inner surface

of the bottom wall 2 of the clip and the side walls 4, 6 of the clip engaging the end parts of the side walls of the louver. As particularly shown in FIGS. 1 and 3, one of the side walls of the clip may be provided at its lower end with an inturned flange 8 to form a support for the lower surface of the louver. The bottom wall 2 and one or both of the side walls 4, 6 may be cut away, as shown at 10, 12 in order to conform to the contour of the louver and allow lapping between adjacent louvers.

Means are provided on each clip for permitting pivotal support, and such means comprise a first upstanding pin 20 which extends outwardly from the bottom wall 2 between the side edges thereof, within the general plane of the louver, and preferably approximately midway the vertical length of the clip. This pin is so that it has retractable thickness, by which I mean that it may be laterally compressed, and it may therefore be hollow, as shown in FIG. 7, or may be formed with one or more axially extending slits or cuts, as shown in FIG. 8. The pin has a slight enlargement 22 at its outer end, whereby it will be firmly retained in a hole after being snapped into the hole by its retractable thickness. The combination of the formation of this pin from the synthetic plastic material of the entire clip and its hollow, slotted or other construction giving it retractable thickness through lateral compression permits easy lateral deformation of the pin as it is forced into a hole in the supporting means. It will be understood that the pin 20 is received within a hole in a fixed wall strip forming part of the assembly to which the invention relates, thereby to pivotally support the louver.

Means are provided by the invention for causing a turning or rotational movement to be exerted on the pivotally supported louver in the operation of the jalousie window. Such means comprise a lever arm 30 which is formed as an integral part of the unitary clip and which is planar in form and extends from the clip adjacent one end thereof and in the plane of the bottom wall 2. It will be seen that this lever part extends at right angles to the adjacent side wall 6, and corner struts 32 may be formed integrally with lever part 30 and side wall 6 to provide reinforcing. A second pin 34 extends outwardly from lever part 30 in spaced parallel relation to pin 20, and in the same direction, and has the same hollow or slotted construction as that pin, with the same enlarged outer end, and therefore has the same retractable thickness due to lateral compressibility. It will be understood that when the parts of the assembly provided by the invention are in operative positions and relations all of the pins 34 of the louvers at each side of the window are connected to a movable member so that all of the louvers will be operated simultaneously.

Means are provided by the invention for separating the outer faces of the bottom wall 2 and the lever part 30 from the adjacent surfaces of the complete assembly, and such means comprise the two preferably circular washers 40 which, respectively, surround the pins 20, 34 at the base thereof and are formed integrally with the other parts of the clip. When the pins are snapped into holes in the supporting and movable vertical strips these washers are held in contact with the adjacent surfaces of the respective strips by the pressure developed by the bearing of the enlarged heads of the pins on the rear surfaces of the strips.

Means are also provided by the invention for sealing the space between the outer surface of the bottom wall 2 of the clip and the adjacent surface of the fixed part which pivotally supports the louvers in the window assembly, and such means comprise an elongated fin 50 which extends along the length of the outer surface of the bottom wall 2 of the clip between its side edges, being formed integrally with the rest of the clip. This fin is triangular in cross sectional shape and has a very thin outer edge whereby the outer part of the fin is flexible, and the entire fin provides a filler for the space between the outside of the bottom wall 2 and the adjacent supporting strip, as shown in FIG. 5.

The clip provided by the invention and described above may be installed on the louver and in the window opening by an unskilled person without the use of special, or in fact any, tools. Each clip is installed in the window opening merely by snapping the pins 20, 32 into the holes provided in the strips 60 and 62 respectively. In addition, because of the provision of the washer 40 at the base of pin 20 a space is provided between the clip and the fixed supporting strip, and this space permits the provision of the flexible fin 50 which seals this space by bending when the clip is in "closed window" position. This fin, formed integrally with the clip, provides great advantages over the prior art sealing means which utilize a strip of felt or other soft material held in a notch or groove in the lateral supporting device, and these advantages are made possible in great part by the space resulting from the provision of the washer 40 at the base of pin 20.

As described above, in addition to the clip the assembly to which the invention relates includes the fixed and movable strips which, respectively, support and operate the louvers. The strips according to the invention are particularly shown in FIGS. 4, 5, 6, 9 and 10 and comprise the fixed strip 60 and the longitudinally movable strip 62, both of which are associated with the side wall 64 of a window opening. The fixed strip 60 is provided along its length with spaced countersunk openings 66 by which it is attached to the wall, as by countersunk head screws, and with other spaced openings 68 each of which receives the pivot pin 20 of one of the clips. This strip 60 is U-shaped, i.e. channel shaped, in cross section with the open part of the U adjacent the wall, as shown in FIG. 5, and within this opening there is attached, as part of the strip a compressible member 70, which may be formed of sponge rubber and which is thicker than the strip itself, as shown in FIG. 9 so that when the strip 60 is fastened to the wall the member 70 is compressed and spreads, providing a seal between the strip and the wall. Strip 60 and compressible member 70 are attached together in place at the factory and are shipped together to the job.

The movable strip 62 is also provided with spaced openings 72 along its length and each of these receives one of the pins 34, each of which extends from the lever part 30 of a clip. This strip has a greater lateral dimension than thickness because the strip depends only on its own rigidity to prevent lateral buckling when transmitting turning force to the louvers, while in the direction of the louvers the connection to each clip reinforces the strip against buckling in that direction. The minimum dimension of movable strip 62 is a little less than that of strip 60 as shown in FIG. 5, in order to provide a space between the strip and the adjacent wall of the window opening.

Each of the strips 60 and 62 is made of a material which is bendable in the direction of its minimum dimension to permit it to be manufactured in considerable lengths and to be packaged in rolls and shipped to various jobs ready to be cut to the proper length and installed without further processing or preparation. The material used to form strips 60 and 62 is such that when it is unrolled it recovers substantially its straight shape without objectionable permanent deformation.

I claim:

1. A supporting and operating assembly for a louver of a jalousie type window mounted in a window opening, comprising parallel vertical strips mounted on the side wall of the window opening, one of which is fixed to the side wall and the other of which is mounted for movement longitudinally of itself and with respect to the side wall, each of said strips being channel shaped in cross section with the open side thereof adjacent the side wall, each of said strips having openings therein spaced along the length thereof, a clip associated with each louver of the jalousie window and receiving and supporting the end thereof and being integrally formed in one piece from a synthetic plastic material, a first pin extending outwardly from the clip in the direction of the length of the louver and being received in one of the openings in the fixed window strip for pivotally supporting the clip and its associated louver, the clip having a lever arm extending therefrom substantially at right angles to the length of the louver, a second pin extending from the lever arm in parallel spaced relation to the first pin and being received in one of the openings in the movable window strip, both said pins having enlarged heads which are transversely compressible whereby they may be snapped into the openings in the strips, and a flexible fin which is substantially co-extensive with the length of the clip and extends outwardly from the clip in the same direction as the pins and is normally of greater vertical height than the distance between the clip and the adjacent fixed strip whereby it closes the space between the clip and the fixed adjacent strip.

2. As a new article of manufacture, a clip for receiving and pivotally supporting the end of a louver of a jalousie type window and transmitting rotational movement thereto, the clip and all of its parts being integrally formed of a synthetic plastic material and comprising a bottom wall and spaced parallel side walls extending at substantially right angles to the bottom wall, the parts being of such dimensions and so related that the clip receives and holds the end of a louver with the bottom and the side walls of the clip engaging, respectively, the end wall and adjacent side walls of the louver, a lever arm extending from the clip at one side thereof in the plane of the bottom wall of the clip, a first pin extending outwardly from the bottom wall, and a second pin extending outwardly from the lever arm in spaced parallel relation to the first pin, both pins having enlarged transversely compressible heads, an integral washer part surrounding each pin at the base there-of, and an upstanding flexible fin extending along the outside of the bottom of the clip from end to end thereof and being of greater height than either of said washer parts.

* * * * *