C. RICHARDS,

AWNING ATTACHMENT.

APPLICATION FILED APR. 1, 1910.

989,422.

Patented Apr. 11, 1911.

4 SHEETS—SHEET 1.

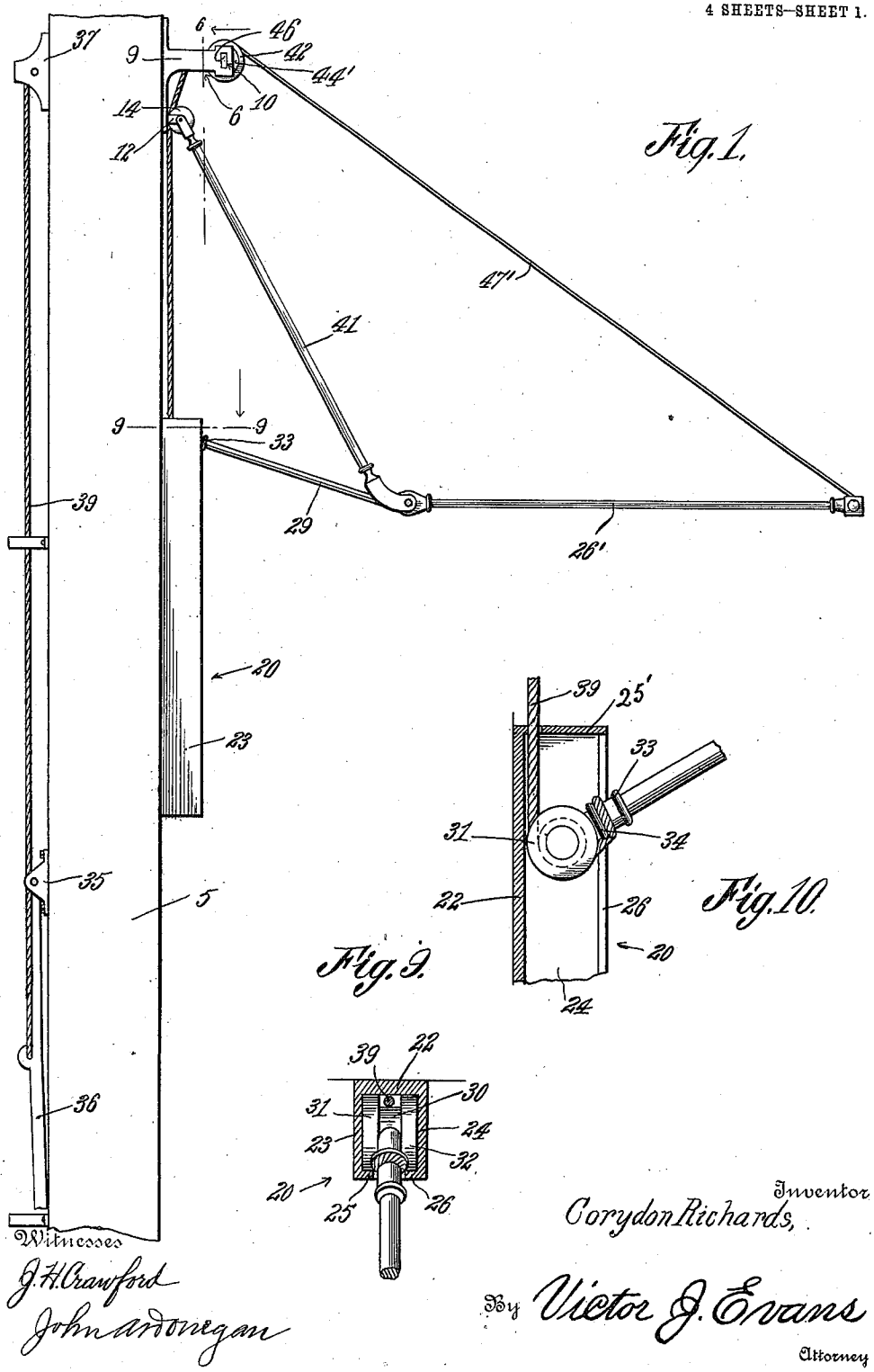

Fig. 1.

Fig. 10.

Fig. 9.

Witnesses

J. H. Crawford

John Donegan

Inventor

Corydon Richards,

By Victor J. Evans

Attorney

THE NORRIS PETERS CO., WASHINGTON, D. C.

C. RICHARDS.

AWNING ATTACHMENT.

APPLICATION FILED APR. 1, 1910.

989,422. Patented Apr. 11, 1911.

4 SHEETS—SHEET 2.

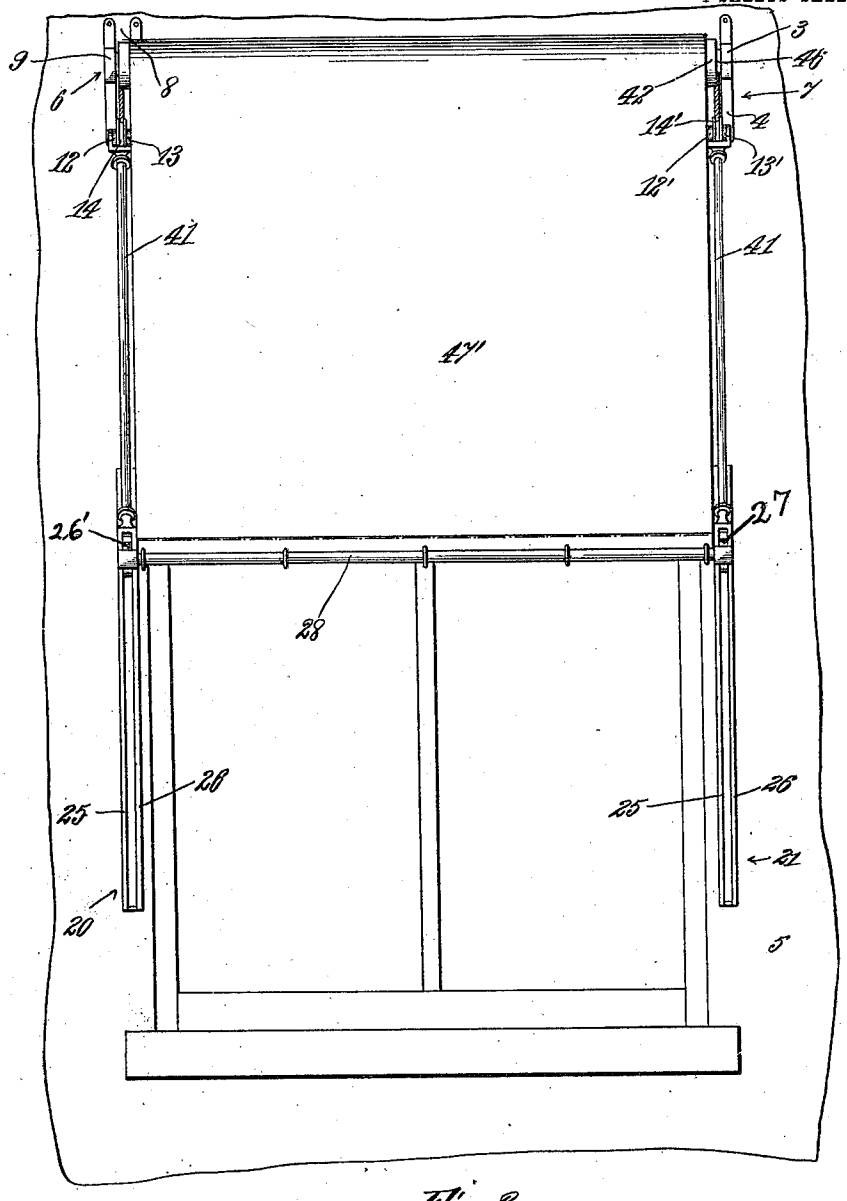

Fig. 2.

Witnesses
J. H. Crawford
John A. Donegan.

Inventor
Corydon Richards,
By Victor J. Evans
Attorney

THE NORRIS PETERS CO., WASHINGTON, D. C.

C. RICHARDS.

AWNING ATTACHMENT.

APPLICATION FILED APR. 1, 1910.

989,422. Patented Apr. 11, 1911.

4 SHEETS—SHEET 3.

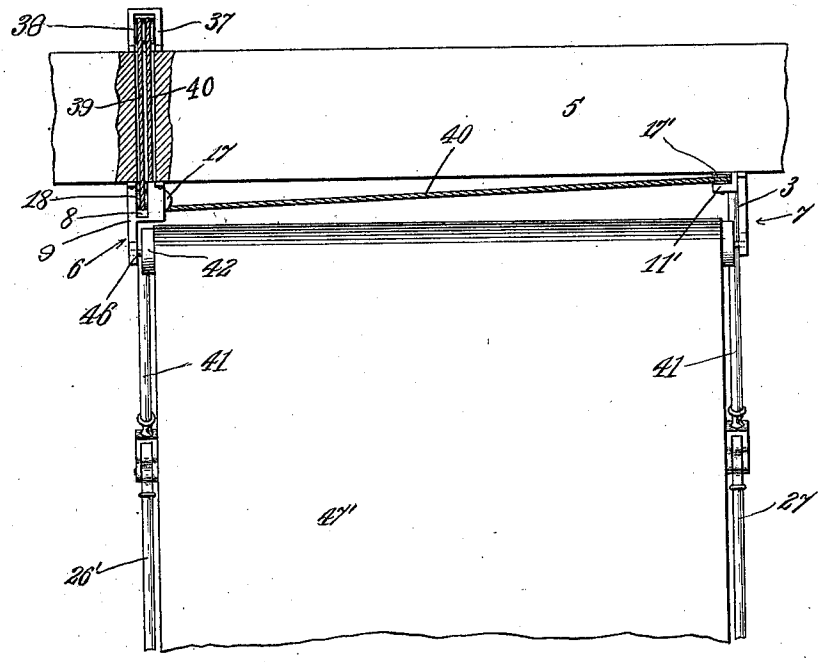

Fig. 3.

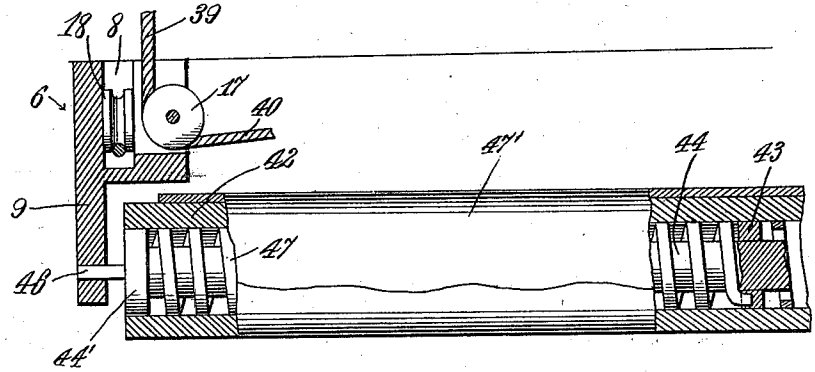

Fig. 4.

Witnesses

J. H. Crawford

John A. Donegan.

Inventor

Corydon Richards,

By Victor J. Evans

Attorney

THE NORRIS PETERS CO., WASHINGTON, D. C.

C. RICHARDS.

AWNING ATTACHMENT.

APPLICATION FILED APR. 1, 1910.

989,422.

Patented Apr. 11, 1911.

4 SHEETS—SHEET 4.

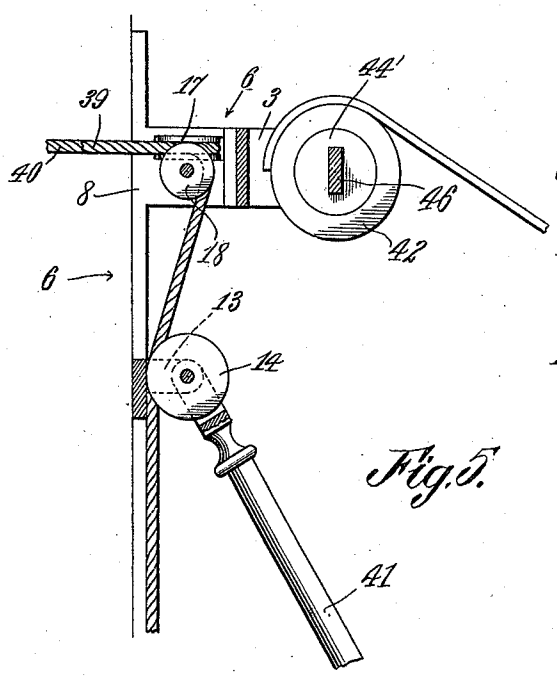

Fig. 5.

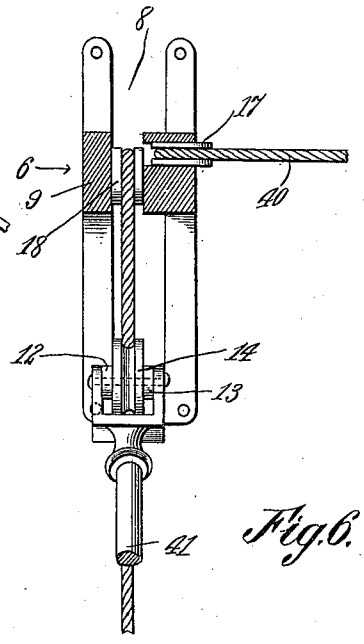

Fig. 6.

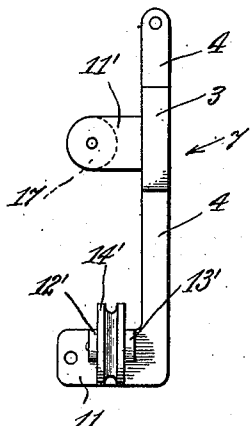

Fig. 7.

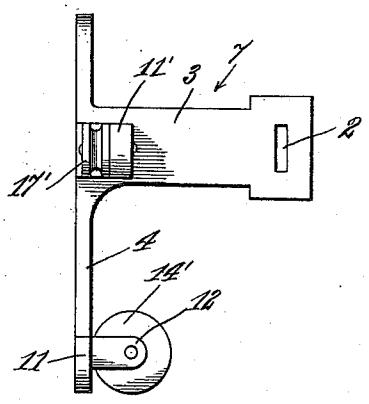

Fig. 8.

Witnesses:
J. H. Crawford
John A. Donegan,

Inventor
Corydon Richards,
By Victor J. Evans
Attorney

THE NORRIS PETERS CO., WASHINGTON, D. C.

UNITED STATES PATENT OFFICE.

CORYDON RICHARDS, OF HARVARD JUNCTION, ILLINOIS.

AWNING ATTACHMENT.

989,422. Specification of Letters Patent. Patented Apr. 11, 1911.

Application filed April 1, 1910. Serial No. 552,891.

To all whom it may concern:

Be it known that I, CORYDON RICHARDS, a citizen of the United States, residing at Harvard Junction, in the county of McHenry and State of Illinois, have invented new and useful Improvements in Awning Attachments, of which the following is a specification.

This invention relates to improvements in awnings, and has for one of its objects the provision of a device of this kind provided with a spring roller adapted to rewind the canopy during the operation of raising the frame.

Another object is the provision of an awning which may be raised and lowered from the interior of the building to which it is applied.

A further object is the provision of a pair of guides and an awning frame provided with rollers to run in said guides, and means for raising the inner end of the frame to which the rollers are applied to the upper ends of the guides and when so raised to be automatically locked against lifting movement produced by high wind.

With these and other objects in view, which will more fully hereinafter appear, the present invention consists in certain novel details of construction and arrangement of parts, hereinafter fully described, illustrated in the accompanying drawings and more particularly pointed out in the appended claims, it being understood that various changes in the form, proportion, size and minor details of the device may be made within the scope of the appended claims without departing from the spirit or sacrificing any of the advantages of the invention.

In the accompanying drawing, forming a part of the specification:—Figure 1 is a side elevation of the device. Fig. 2 is a front elevation of the same. Fig. 3 is a plan view, showing the frame of the window partly in section and with the operating cords passing therethrough. Fig. 4 is a plan view of one end portion of the spring roller, partly in section and also showing in section one of the brackets which supports one end of the spring roller and the pulleys for the operating cords arranged within the bracket. Fig. 5 is a vertical section taken through one of the brackets and also showing the roller in end elevation and a portion of the canopy. Fig. 6 is a sectional, front elevation taken on the line 6—6 of Fig. 1. Fig. 7 is a front view of one of the brackets. Fig. 8 is a side view of the same. Fig. 9 is a sectional plan taken on the line 9—9 of Fig. 1. Fig. 10 is a section taken through the upper end of one of the guides and showing the inner end of one side of the frame in side elevation and also the operating cord attached thereto.

Similar numerals of reference are employed to designate corresponding parts throughout.

The support to which the device is applied is designated by the numeral 5 and may be the frame of a window. Fixedly secured to the upper end of the frame and adjacent the opposite sides thereof are a pair of brackets designated in general by the numerals 6 and 7. Since these brackets are somewhat different in structure, a description of the bracket 6 will be given. By reference now to Figs. 5 and 6, it will be seen that the bracket includes an oblong base plate having a longitudinal slot 8 arranged parallel with the length of the window frame. Extending outwardly from the upper end portion of one side of the slot 8 is an arm 9, the outer end of which is provided with a non-cylindrical socket 10. The lower end portion of the base plate is provided with a pair of forwardly extending spaced lugs 12 and 13 through which extends a shaft on which is journaled a sheave 14 and extending laterally from the inner side of the base plate and adjacent the upper end thereof are a pair of spaced lugs having arranged therebetween a shaft upon which is journaled a sheave 17. The sheave 17 is so arranged that it will rotate in a plane perpendicular to the sheave 14. Journaled in a shaft extending transverse the slot and located adjacent to the upper end of the base plate is a sheave 18 in a vertical plane with the sheave 14. The opposite bracket 7 includes a base plate 4 and extending outwardly from the upper end portion of the

base plate is an arm 3, the outer end of which is provided with a non-cylindrical slot 2. The lower end of the base plate 4 terminates in an inward extension 11, the outer face of which is provided with a pair of spaced lugs 12′ and 13′ through which extends a shaft upon which is journaled a sheave 14′. Extending inwardly from the upper end portion of the base plate 4 is an arm 11′ having a horizontally disposed shaft on which is journaled a sheave 17′ and formed in the inner end of the arm 3 is an opening in a plane with the sheave 17′.

Fixedly secured to the opposite sides of the support 5 and below the brackets 6 and 7, are a pair of vertical guides 20 and 21. These members are channeled and are preferably of metal and as best shown in Fig. 9, each guide consists of a base plate 22 from the opposite sides of which project the side walls 23 and 24. The outer edges of the side walls are provided with inwardly extending flanges 25 and 26, the space therebetween preventing outward movement of the rollers to be presently described. The side walls 23 and 24 of each guide, are connected at their upper ends by means of an end wall 25′, providing a stop, the function of which will appear later.

The awning frame in the present instance is shown to be a substantially U-shaped structure, the opposite sides of which are designated by the numerals 26′ and 27, the outer ends of these sides being connected by the usual cross piece 28. Adjacent the inner ends, the arms are slightly offset, as shown at 29. The inner ends of these arms are of a diameter to slidingly fit between the flanges 25 and 26 at the outer edges of the side walls of the guides, and their inner ends or those within the guides are secured in heads. The heads include a center portion 30 of less length than the distance between the side walls 23 and 24 and extending outwardly from the centers of the portions 30 are shafts upon which are journaled rollers 31 and 32. The rollers 31 and 32 are considerably greater in diameter than the diameter of the central portions 30 of the heads and when in position, as shown in Fig. 9, their peripheries will bear on the inner faces of the flanges 25 and 26. The arms 26′ and 27 are provided with a pair of spaced rings 33 and 34. The ring 33 is arranged in advance of the flanges 25 and 26 while the inner ring 34 is arranged between the flanges 25 and 26 and their function is to prevent the operating cords from excessive outward and inward movements and from bearing on the rollers 31 and 32.

The means for raising and lowering the frame will now be described.

By reference to Fig. 1, it will be seen that arranged on the inner face of the window frame 5 is a bracket 35 on which is fulcrumed one end of a lever 36. The bracket 35 is arranged adjacent the lower end of the frame 5 and arranged adjacent the upper end of the frame 5 and in a plane with the bracket 6 is a bracket 37 in which is journaled a double-grooved pulley 38. Trained over the pulley 38 is a cord or cable 39 one end of which is fixedly secured to the intermediate portion of the lever 36 and the opposite end of which is trained over the pulley 18 and, thence, over the pulley 14 and passed through an opening in one of the stops 25′ and fixedly secured to the side 26′ of the frame and between the rings 33 and 34. Connection between the opposite side of the frame and lever 36 is established by means of a cord or cable 40. This member has one end secured to the opposite side 27 of the frame in a manner similar to the cable 39 and is, thence, directed upwardly and through an opening in the other of the stops 25′ and behind the sheave 14′ as is best shown in Fig. 3, thence, over the sheave 17′ of the bracket 7 and, thence, over the corresponding sheave 17 of the bracket 6 after which it is directed through the opening in the upper end of the window frame and parallel with the cable 39 and, thence, over the double sheave 38 and finally has its inner end fastened to the lever 36. By reference now to Figs. 1 and 6, it will be seen that straddling the lugs 12 and 13 between which the sheave 14 is journaled at the lower end of the brackets 6 and 7 are the bifurcated inner ends of brace rods 41, the outer ends of which are bifurcated and straddle the sides 26′ and 27 of the frame at points substantially intermediate of their middles and inner ends, or at the offset portions, as clearly shown in Fig. 1.

From the foregoing, it will be evident, that, when it is understood that the cables 39 and 40 are of such lengths, that when the frame is parallel with the window frame the free end of the operating lever 36 will extend vertically upward, by moving the said lever downwardly to an opposite position, the inner ends of the frame will be raised within the guides and by virtue of the brace rods 41 the outer ends of the frame will move downwardly so that by the time the lever has completed its downward movement the awning frame will be at right angles to the window frame, as shown in Fig. 1, it being understood that the lengths of the brace rods 41 will be sufficient to permit the said awning frame to move outwardly thus far.

It will be observed when the awning frame is at right angles to the window frame the inner end portions of the awning frame will bear against the stops 25′, whereby further downward and outward movement of

the outer end portion of the awning frame will be prevented.

The canopy and the method of attaching the same to the frame so that during the lifting of the latter the canopy will be automatically wound upon a roller will now be described.

By reference now to Fig. 4, it will be seen that the roller 42 is a hollow cylindrical structure and less in length than the distance between the brackets 6 and 7. Fixedly secured in the middle of the roller is a ring 43 and extending through the roller and through the ring 43 is a shaft 44. The opposite ends of the shaft terminate in circular heads 44′ one of which is shown in Fig. 4 and extending in advance of the heads 44′ are non-cylindrical studs 46 of a size to nicely fit within the sockets 10 and 2 of the arms 9 and 3 of the brackets 6 and 7. Encircling the shaft 44 with their opposite terminals anchored in the heads 44′ and opposite sides of the ring 43 are a pair of helical springs 47 which are adapted to rewind the roller after the latter has been turned by the outward movement of the canopy and frame. The canopy is designated by the numeral 47′ and one end is fixedly secured to the roller 42 and its opposite end to the cross bar 28 of the frame. The canopy is of sufficient length to permit the frame to move outwardly and at right angles, as shown in Fig. 1. In positioning the roller, the springs 47 are tensioned sufficient to turn the roller after the frame and canopy have moved outward, as shown in Fig. 1. Thus, it will be seen when the parts are in the position as shown in Fig. 1, and it is desired to raise the awning, the operating lever 36 is moved upwardly whereby the inner ends of the sides 27 and 26′ of the frame will, by their own weight descend within the guides. This descending movement of the inner ends of the frame will, owing to the pivotal connection between the levers 41 and sides 27 and 26′, move the outer ends of the said sides upwardly and it must be remembered that the springs will be sufficiently tensioned to rewind the roller and that it will be evident that when the roller rotates the canopy will be wound thereon and the frame moved to a position substantially parallel with the awning frame. It will be evident that when the parts are in position shown in Fig. 1 that the awning frame will be securely locked against movement due to the fact that the inner ends of the sides 27 and 26′ will bear on the upper ends of the guides and be held against downward movement by the cables 39 and 40 so that during high wind the awning will be held against lifting movement.

From the foregoing, it is evident that I have provided a device which is comparatively simple in structure and inexpensive in manufacture, which may be applied to most forms of windows now in use.

Having thus described the invention, what is claimed, is:—

1. In an awning, the combination with a support, of a pair of oppositely positioned guides carried by said support, an awning frame having its inner ends slidably fitted in said guides, brace bars having their opposite ends pivoted to said support and to the opposite sides of said frame, operating cords passing through said support and having their outer ends secured to said awning frame, and a lever connected to the inner ends of said cords and adapted when moved to one position to raise the inner ends of said awning frame to the tops of said guides, whereby upward movement of the outer ends of said awning frame will be positively prevented.

2. In an awning, the combination with a support, of a pair of oppositely positioned brackets carried by said support, sheaves rotatably mounted in said brackets, a pair of oppositely positioned guides carried by the support and located below the brackets, an awning frame having its inner ends slidably fitted in said guides, brace bars having their opposite ends pivoted to said support and to the opposite sides of said frame, operating cords passing through said support and having their outer ends secured to the sides of the frame, and a lever secured to the inner ends of said operating cords and adapted when moved to one position to raise the inner ends of the said sides of the awning frame to the upper ends of the guides whereby lifting movement of the outer end of said awning frame will be prevented.

3. In an awning, the combination with a support; of a pair of vertically disposed and oppositely positioned guides carried by said support and having their upper ends provided with stops, an awning frame having its inner ends slidably fitted in said guides, operating cords passing through said support and having their outer ends secured to the sides of the frame, and a lever secured to the inner ends of said operating cords and adapted when moved to one position to raise the inner ends of the said sides of the awning frame into engagement with said stops.

4. In an awning, the combination with a support; of a pair of vertically disposed and oppositely positioned guides carried by the said support and provided at their upper ends with stops, an awning frame having its inner ends slidably fitted in said guides, brace rods having their opposite ends pivoted to the said support and to the opposite sides of said frame, operating cords passing through said support and having their outer ends secured to the inner ends of said awning frame, and a lever fulcrumed on the sup-

port and secured to the inner ends of the operating cords and adapted when moved to one position to raise the inner ends of the said sides of the awning frame into engagement with said stops whereby the brace rods will prevent lifting movement of the outer end of said awning frame.

In testimony whereof I affix my signature in presence of two witnesses.

CORYDON RICHARDS.

Witnesses:
B. F. MANLEY,
ELMER E. HAMMOND.

Copies of this patent may be obtained for five cents each, by addressing the "Commissioner of Patents, Washington, D. C."