W. D. HUFF.

ELECTRIC HEATER.

APPLICATION FILED MAY 27, 1915.

1,169,262. Patented Jan. 25, 1916.

Fig. 1.

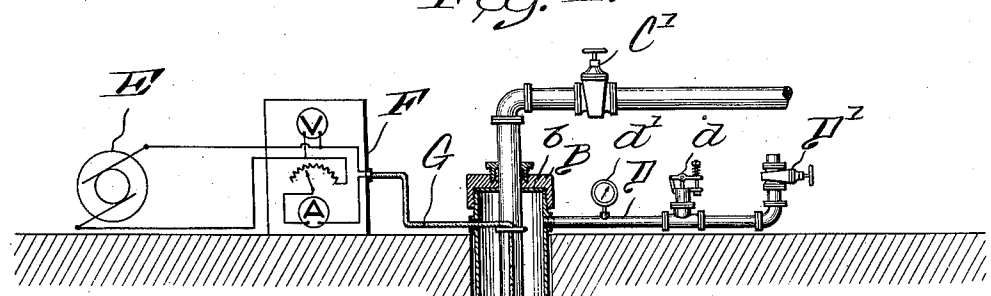

Fig. 2.

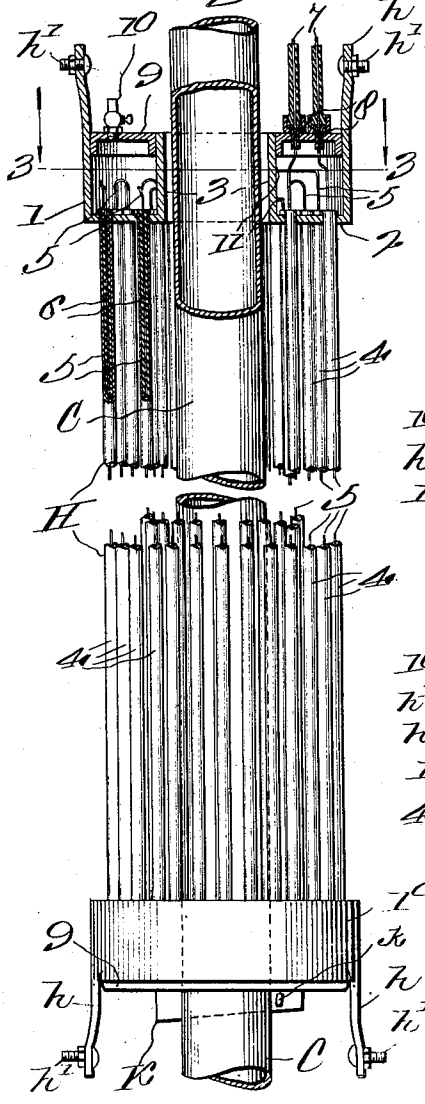

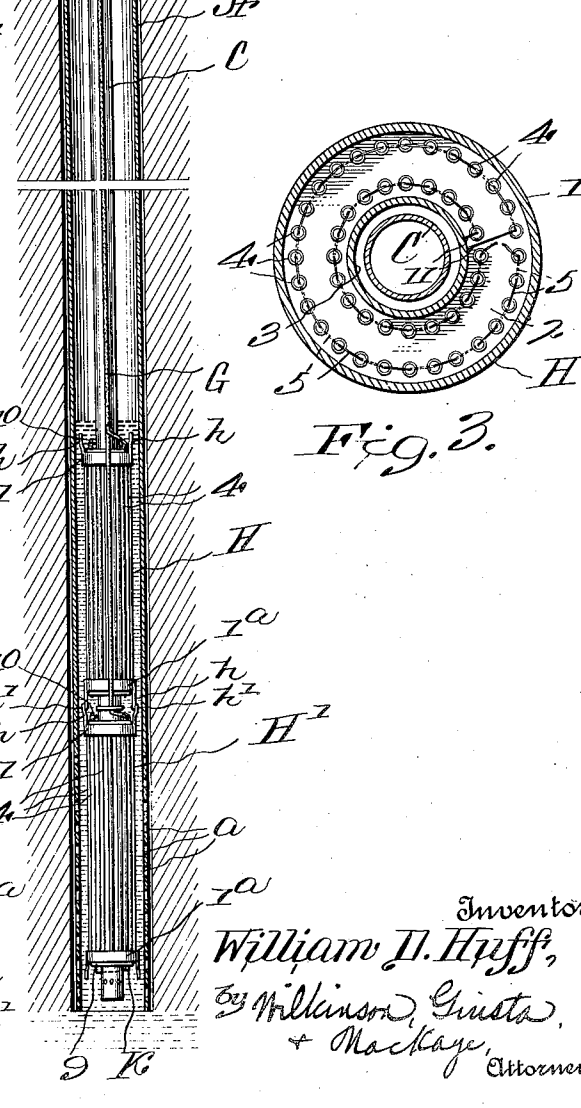

Fig. 3.

Inventor

William D. Huff,

By Williamson, Giusta & MacKaye,

Attorneys.

UNITED STATES PATENT OFFICE.

WILLIAM DANIEL HUFF, OF LA FAYETTE, LOUISIANA.

ELECTRIC HEATER.

1,169,262. Specification of Letters Patent. Patented Jan. 25, 1916.

Application filed May 27, 1915. Serial No. 30,784.

To all whom it may concern:

Be it known that I, WILLIAM DANIEL HUFF, a citizen of the United States, residing at La Fayette, in the parish of Lafayette and State of Louisiana, have invented certain new and useful Improvements in Electric Heaters; and I do hereby declare the following to be a full, clear, and exact description of the invention, such as will enable others skilled in the art to which it appertains to make and use the same.

My present invention relates to improvements in electric heaters, and is especially intended to apply to electric heaters adapted for use submerged in liquids, such as crude oil, water, or the like.

My invention is especially intended to relate to electric heaters adapted for use in oil or sulfur wells, in which it is desired to heat the liquid contained in the well. This heating is frequently desired for the purpose of generating pressure in the well, either for pumping the contents thereof out of the well, or for forcing the heated liquid in the well back into the strata of earth for the purpose of cleaning the same and increasing the flow of the well, as fully described in my applications entitled Operating oil wells, Serial No. 19607, filed April 6, 1915; Operating sulfur wells, Serial No. 22874, filed April 20, 1915; and Cleaning oil wells, Serial No. 24463, filed April 28, 1915.

According to my invention I intend to use the heaters either singly or in groups, as may be desired, and the same are preferably applied to the central pipe or delivery tube mounted in wells of the character described in my applications aforesaid. I do not intend to limit my invention, however, to use in wells alone, but it may be used in a great variety of ways.

Reference is had to the accompanying drawings, in which I have shown one embodiment of the invention as applied to use in wells, and in which:—

Figure 1 shows a central vertical section through the well casing, the heaters and inner pipe of the well being shown in elevation, and parts being broken away; Fig. 2 is an enlarged view of the heater as mounted in the well, parts being broken away; and Fig. 3 shows a section along the line 3—3 of Fig. 2, and looking down.

A represents the outer casing of the well which is perforated at the bottom, as at *a*, or is provided with a suitable screen well known in the art. The top of the well is closed by a cap B, with suitable packing *b* and projecting down into the center of the well is a delivery pipe C, for delivering the fluid contents of the well, which pipe is controlled by the valve C′.

D represents a pressure pipe having a safety valve *d*, a pressure gage *d′*, and a valve D′ to open or close said pipe when desired.

Electricity is supplied from any suitable source, as from the electric generator E, and passes through the switchboard F and the cable G to the heaters H and H′, which are slipped over the inner pipe C and suspended in the well, as shown in Fig. 1. These heaters are arranged to be used singly or in groups, and when used in groups are connected together in any suitable way, as by means of the straps *h* and the bolts *h′*.

The heaters are constructed as shown in Figs. 2 and 3, in which there are two annular heads 1 and 1ª, preferably in the form of hollow cylinders closed at the inner ends 2 and open at the outer ends, and provided with an inner cylindrical wall 3. These two heads 1 and 1ª are reversely disposed, and the diaphragms 2 are connected together by the tubes 4 which are of copper, or other suitable metal, secured tight in said diaphragms 2, as by swaging, brazing, or otherwise. Rove through these tubes 4 are the heating wires 5, which wires are spaced from said tube by mica, glass beads, or other suitable insulating material, shown at 6 in Fig. 2, and the leading-in wires 7 to each heater pass through insulated plugs 8 in the cap 9 and are connected to the armored cable G. The cap 9 is in the form of a flanged ring, and is made to close the top of the annular chamber in the head 1, and the joint between the two is made air and water tight as by soldering, brazing, or in any other convenient way; and this cap 9 is provided with an air cock 10 as shown in Fig. 2. The heater thus formed is air and water tight, and its efficiency is increased by pumping the air out of the two heads 1 and 1ª and of the connecting tubes 4 by an air pump connected to the cock 10, and then filling

the vacuum in the heater with nitrogen gas. The vacuum is a poor conductor of heat, but the nitrogen gas serves as a conductor by the convection currents generated therein; and moreover being an inert gas it prevents the inclosed parts from becoming oxidized, as would be the case if exposed to the imprisoned air when highly heated, as would ordinarily occur in heaters of this kind.

It will be evident that if the gas be forced in under pressure, and a heater be submerged, if there are any leaky spots the bubbles of gas will indicate same, and the defects can be readily cured. Moreover, by having the gas contained in the heater under suitable pressure, when the heater is submerged the gas will tend to prevent the inflow of any liquid through such minute openings as might be occasioned by the inequalities in expansion or contraction of the various parts.

By using nitrogen gas, the heating wires and other parts contained on the inside of the heater are protected from oxidation, which is a very serious difficulty with electric heaters where these parts are exposed to the oxygen of the atmosphere. Moreover, the heating wires may be heated to a higher temperature without injury. As is well known, the resistance to the electric current increases with the temperature, and the economical efficiency of an electric heater increases with the temperature of the heating wires.

The heater may be supported in the inner pipe C in any convenient way, as by the wedge K passing through a slot in the inner pipe C, and held in place by the cotter pin *k*.

The electric current may be carried both ways, through the cable G, but it will ordinarily be preferable to have the current supplied through the leading-in wire from said cable, and the other wire grounded as by connection with the inner pipe C, or the well casing A, or both.

While I have shown my invention as applied to use in wells, it will be obvious that it may be applied in various other relations, whether submerged or mounted in the air, or wherever located, and I do not mean to limit my invention to any particular use.

It will be obvious that various modifications might be made in the herein described apparatus, and in the construction, combination and arrangement of parts which could be used without departing from the spirit of my invention.

Having thus described my invention, what I claim and desire to secure by Letters Patent of the United States is:—

1. An electric heater comprising two hollow annular heads adapted to be placed around a central pipe, tubes connecting said heads, the joints in said heads and tubes being substantially air-tight, heating wires rove through said tubes, and means for conveying an electric current to said wires, substantially as described.

2. An electric heater comprising two hollow annular heads, tubes connecting said heads, the joints in said heads and tubes being substantially air-tight, heating wires rove through said tubes, a cock opening into one of said heads and adapted to exhaust the air from the interior of said heads and said tubes, and to charge same with an inert gas, and means for conveying an electric current to said wires, substantially as described.

3. An electric heater comprising two hollow annular heads adapted to be placed around a central pipe, tubes connecting said heads, the joints in said heads and tubes being substantially air-tight, heating wires rove through said tubes, and means for conveying an electric current to said wires, with nitrogen gas filling the hollow portions of said heads and said tubes, substantially as and for the purposes described.

4. An electric heater comprising two hollow annular heads, tubes connecting said heads, the joints in said heads and tubes being substantially air-tight, heating wires rove through said tubes, a cock opening into one of said heads and adapted to exhaust the air from the interior of said heads and said tubes, and to charge same with an inert gas, and means for conveying an electric current to said wires, with nitrogen gas filling the hollow portions of said heads and said tubes, substantially as and for the purposes described.

5. An electric heater comprising two hollow heads, tubes connecting said heads, the joints in said heads and tubes being substantially air-tight, heating wires rove through said tubes and spaced therefrom by insulating material, a cock opening into one of said heads and adapted to exhaust the air from the interior of said heads and said tubes, and to charge same with an inert gas, and means for conveying an electric current to said wires, substantially as described.

6. An electric heater comprising two hollow heads, tubes connecting said heads, the joints in said heads and tubes being substantially air-tight, heating wires rove through said tubes and spaced therefrom by insulating material, a cock opening into one of said heads and adapted to exhaust the air from the interior of said heads and said tubes, and to charge same with an inert gas, and means for conveying an electric current to said wires, with nitrogen gas filling the hollow portions of said heads and said tubes, substantially as and for the purposes described.

7. An electric heater comprising two hollow heads, tubes connecting said heads, the

joints in said heads and tubes being substantially air-tight, heating wires rove through said tubes, a cock opening into one of said heads and adapted to exhaust the air from the interior of said heads and said tubes, and to charge same with an inert gas, and means for conveying an electric current to said wires, with an inert gas filling the hollow portions of said heads and said tubes, substantially as and for the purposes described.

In testimony whereof, I affix my signature.

WILLIAM DANIEL HUFF.