April 1, 1924. 1,488,567

T. L. TALIAFERRO

HERMETIC CLOSURE FOR JARS

Filed June 19, 1922

Fig. 1.

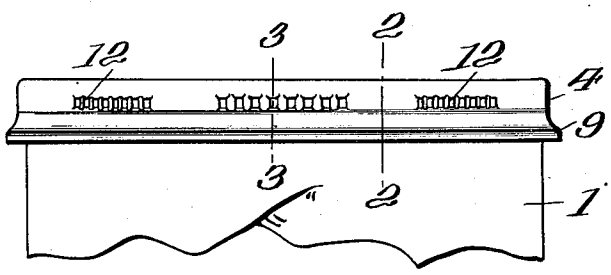

Fig. 2.

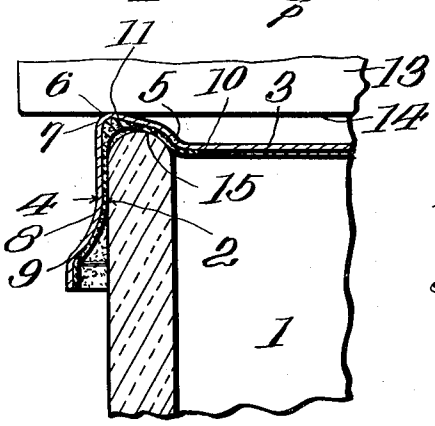

Fig. 3.

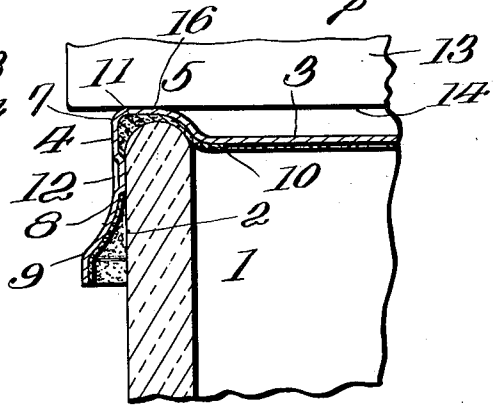

Fig. 4.

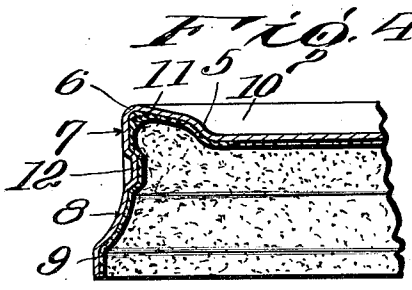

Inventor

Thomas Lucien Taliaferro

By Sturtevant & Mason

Attorneys

Patented Apr. 1, 1924. 1,488,567

UNITED STATES PATENT OFFICE.

THOMAS L. TALIAFERRO, OF CHICAGO, ILLINOIS.

HERMETIC CLOSURE FOR JARS.

Application filed June 19, 1922. Serial No. 569,453.

To all whom it may concern:

Be it known that I, THOMAS L. TALIAFERRO, a citizen of the United States, residing at Chicago, in the county of Cook, State of Illinois, have invented certain new and useful Improvements in Hermetic Closures for Jars, of which the following is a description, reference being had to the accompanying drawing and to the figures of reference marked thereon.

The invention relates to new and useful improvements in hermetic closures for jars, and more particularly to a closure for a jar having the outer wall thereof substantially straight and vertical.

An object of the invention is to provide a closure which, when seated on the jar, may be slightly re-formed so as to aid in the sealing of the closure on the jar.

A further object of the invention is to provide a closure having a depending flange coated with a plastic sealing material, with groups of gripping projections which are adapted to engage the wall of the jar for holding the closure on the jar.

These and other objects will in part be obvious and will in part be hereinafter more fully disclosed.

In the drawings which show by way of illustration one embodiment of the invention—

Figure 1 is a side view of a portion of a jar having my improved closure applied thereto;

Fig. 2 is a sectional view on the line 2—2, and showing the closure on the jar ready for the seating head to re-form the same for applying the seal;

Fig. 3 is a sectional view on the line 3—3 of Fig. 1, and showing the closure or cover fully seated on the jar, and

Fig. 4 is a vertical sectional view through a portion of the cover or closure before the same is applied to the jar.

In carrying out the invention, I have provided a closure having a top portion which is provided with a depending flange. Adjacent the upper end of the flange, said top portion is provided with a channel and the entire inner surface of the flange and channel is coated with a plastic sealing material. The depending flange is substantially vertical and the bottom of the channel forms a rounded acute angle therein, and this acute angle serves the double function of forming the pocket in which the sealing material accumulates to a greater extent than at other places on the flange and it also permits a re-shaping of the closure after the same has been placed on the jar for increasing the efficiency of the seal. The flange is of uniform diameter, and is of a diameter slightly larger than the jar to which the closure is to be applied. The lower portion of the flange flares outwardly so as to receive the mouth of the jar and facilitate the placing of the closure on the jar. The extreme lower edge of the flange is bent downwardly so as to avoid an outwardly projecting raw edge of metal. The flange above the flared portion is provided with a series of groups of indentations, and these indentations are so formed that when the closure is placed on the jar, they will firmly grip the side wall of the jar and hold the closure thereon.

Referring more in detail to the drawings, I have shown the invention as applied to a jar 1, the outer wall 2 of which is substantially straight and vertical. The closure consists of a top portion 3 and a depending flange 4. Said top portion adjacent the upper edge of the flange is provided with a channel 5. The metal forming the channel 5 meets the upper portion of the flange 4 in a rounded acute angle 6. The flange from the point 7 is substantially straight and vertical to the point 8. From the point 8 to the point 9, said flange flares outwardly and thus forms a wide open mouth to receive the mouth of the jar. From the point 9 said flange extends downwardly so that there is no outstanding raw edge of metal. Said flange and top are coated with a plastic sealing material from the extreme lower edge to the point 10 on said top. The coating is preferably scraped on to the closure and as a result, the coating will be of greater thickness at 11 than at other points on the flange and top. The inner diameter of the flange is greater than the outer diameter of the jar mouth, and said flange is provided with a series of indentations 12

These indentations are arranged in groups as clearly shown in Fig. 1. The diameter of the can from the inner surface of one indentation to another on the opposite side of the closure is slightly less than the outer diameter of the jar so that when said indentations engage the rounded upper portion of the jar, there is a tendency to cause the flange to flare outwardly and this causes the indentations to firmly grip the wall of the jar. As a matter of fact, the sealing material will be scraped from these indentations and carried up into the channel and the metal of the indentations will contact directly with the glass of the jar. My improved closure may be put on to a jar by the use of a closing head 13 having a flat surface 14. In Fig. 2 of the drawings, it will be noted that the closure has been moved out on to the jar until the point 15 on the closure engages the curved wall at the upper portion of the mouth of the jar. Further pressure of the closing head on the closure will cause the metal from the point 15 or thereabouts to the point 16 to assume a horizontal position and to this extent, the closure is re-shaped. Several advantages are accomplished by my particular form of closure. In the first place, the closing head engages the closure at a point substantially over the vertical depending flange and therefore, the closure may be pressed down on to the jar without requiring the use of a chuck which fits within the depression in the closure. When the pressure is directly over the vertical flange, it may be forced down on to the chuck without causing undue flaring and releasing its grip on the jar.

Then again, where the cover or closure is re-shaped, the sealing material will be reformed and packed firmly against the mouth of the jar, filling the pocket which remains after the re-shaping and efficiently sealing the closure to the jar clear across the upper edge of the jar.

By the use of the indentations placed in groups, my improved closure is especially adapted to firmly grip a jar which may be slightly out-of-round, and the projections all the way around the closure will make gripping contact with the jar.

While I prefer to use a closure having indentations, it will be obvious that so far as the particular shape of the closure is concerned, and the re-shaping of the same after it is applied to the jar, said indentations may be grouped or omitted. On the other hand, so far as the indentations are concerned, it will be understood that the cover may be of different shape so as not to require a re-shaping after the same is placed on the jar.

The scope of the invention is set forth in the appended claims.

Having thus described the invention, what I claim as new and desire to secure by Letters-Patent, is—

1. A hermetic closure for a jar having the outer wall thereof straight, comprising a top portion having an integral flange depending therefrom and provided on its inner face with a plastic coating, the upper portion of said flange being substantially vertical, and the lower portion being flared outwardly to receive the jar mouth, said vertical portion adjacent the flared portion having a plurality of spaced groups of indentations adapted to be stripped of the coating when the closure is placed on the jar and to directly contact with and grip the outer wall of the jar for holding the closure firmly thereon.

2. A hermetic closure for a jar having the outer wall thereof straight, comprising a top portion having an integral depending flange, said top portion having a channel formed therein adjacent the flange to receive the edge of the mouth of the jar, said flange and channel having a coating of plastic sealing material thereon, the upper portion of said flange being substantially vertical, the lower portion of the flange being flared outwardly to receive the mouth of said jar, said extreme lower edge of the flange being substantially vertical, the vertical portion of the flange adjacent the flared portion having a series of groups of spaced indentations arranged at intervals about the flange, said indentations being adapted to be stripped of the coating when the closure is upon the jar and to directly contact with and grip the outer wall of the jar for holding the closure firmly thereon.

3. A hermetic closure for a jar having the outer wall thereof straight, comprising a top portion having an integral flange depending therefrom and provided on its inner face with a plastic coating, the upper portion of said flange being substantially vertical and the lower portion being flared outwardly to receive the jar mouth, the top of said closure being formed so that the extreme outer portion thereof, where it is joined to the depending flange, is the highest portion of the closure, whereby when a flat head is placed against the closure to force it on the jar the pressure will be substantially directly over the vertical portion of the depending flange.

4. A hermetic closure for a jar having the outer wall thereof straight, comprising a top portion having an integral flange depending therefrom and provided on its inner face with a plastic coating, the upper portion of said flange being substantially vertical and the lower portion being flared outwardly to receive the jar mouth, the top of said closure being formed so that the extreme outer portion thereof, where it is joined to the de-

pending flange, is the highest portion of the closure, whereby when a flat head is placed against the closure to force it on the jar, the pressure will be substantially directly over the vertical portion of the depending flange, said vertical portion adjacent the flared portion having a plurality of spaced groups of indentations adapted to be stripped of the coating when the closure is placed on the jar and to directly contact with and grip the outer wall of the jar for holding the closure firmly thereon.

In testimony whereof, I affix my signature.

THOMAS L. TALIAFERRO.