Dec. 15, 1964 E. B. BAHNSEN 3,161,391

BAG STAND

Filed July 24, 1961

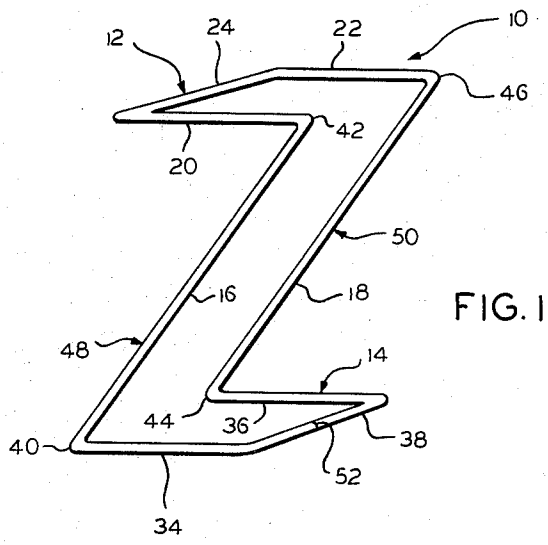

FIG. 1

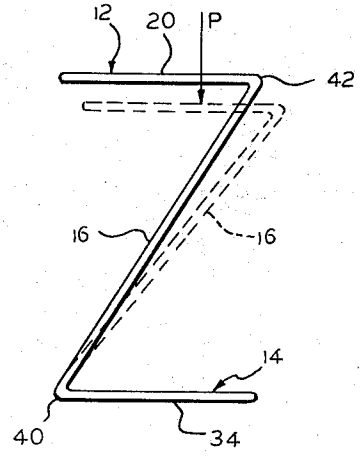

FIG. 3

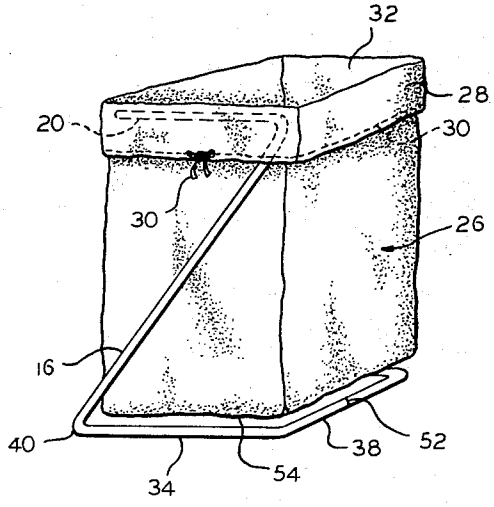

FIG. 2

INVENTOR.
ERWIN B. BAHNSEN

BY
Bradley, Baird, Clayton, Miller & Vogel

ATTORNEYS

United States Patent Office 3,161,391 Patented Dec. 15, 1964

3,161,391

BAG STAND

Erwin B. Bahnsen, Hinsdale, Ill., assignor to Steiner American Corporation, Salt Lake City, Utah, a corporation of Nevada

Filed July 24, 1961, Ser. No. 126,180
1 Claim. (Cl. 248—99)

This invention relates to a bag stand or holder and particularly to a device adapted to support a laundry bag in an open suspended position.

The linen supply industry supplies fresh table cloths, napkins, aprons, towels, etc. to commercial enterprises such as hotels, restaurants, office buildings and the like. After the linens have been soiled in use, they are picked up from the customer by the supplying company for laundering. Inasmuch as a variety of liners may be used by a single customer, it is advantageous to segregate the soiled linens at the customer's place of business. This procedure saves time for the linen supplier's route man and for the laundry that washes the linens. To facilitate segregating aprons from napkins and towels from tablecloths etc. an individual laundry bag is supplied to the customer for each type of linen. To insure that the customer's employees will regularly use the laundry bags as intended each bag is suspended in an open condition on an individual bag stand. Heretofore, the laundry bag stands provided for this purpose were expensive to manufacture and cumbersome. More specifically, prior art bag stands used clips, lugs, spikes and so forth to fasten the bag to the stand. This feature promoted tearing of the bag in removing it from the stand.

Many prior laundry bag stands obtained the requisite lateral stability for supporting the heavily loaded laundry bags by having a plurality of vertically disposed legs rigidly secured to a circular hoop frame. These stands occupied valuable storage space when not in use because they did not lend themselves to stacking. A shortcoming of prior art stands designed to circumvent the awkward storage problem by having collapsible provisions, is that lateral stability was sacrificed and the stands were easily upset if a passerby's foot caught around a leg of the stand.

An important object of my invention is to provide an improved bag stand which overcomes prior problems and is simple in design and construction, highly practical in use, economical to manufacture, and adapted to support a heavy load of soiled linen in a stable manner.

Another object of the invention is to provide a bag stand and a laundry receptacle incorporating the stand, the latter being adapted to maintain a laundry bag in an open end suspended condition by receiving a cuff around the top of the bag over an upper element of the stand.

Still another object is to provide a stand of the type set forth which is formed from a single length of bent metal rod.

Yet another object is to provide a stand of the type set forth from which a heavy bag of soiled linen may be removed by sliding either the bag or the stand horizontally with no requirement for lifting the bag.

A further object of the invention is to provide an improved laundry bag stand that may be used indiscriminately "upside down" or "right side up."

Additional features of the invention pertain to the particular arrangement of the elements whereby the above-outlined and other operating features thereof are attained.

The invention, both as to its organization and method of operation, together with further objects and advantages thereof will best be understood by reference to the following specification taken in connection with the accompanying drawing in which like numerals are used to designate like parts throughout and in which:

FIGURE 1 is a perspective view of a preferred embodiment of a bag stand made in accordance with and embodying the principles of the present invention;

FIG. 2 is a perspective view of a laundry receptacle which includes the bag stand and a laundry bag supported thereby;

FIG. 3 is a side elevational view of the laundry stand of FIG. 1 diagrammatically illustrating its resilient change under load.

There is shown in FIG. 1 of the drawing a bag stand generally designated by the numeral 10 made in accordance with and embodying the principles of the invention. The stand 10 comprises a supporting yoke or frame 12, a base frame 14 and two struts 16 and 18.

The yoke 12 is horizontally disposed and generally U-shaped in plan, providing an enclosure having spaced apart ends. More particularly, the yoke 12 is a bent rod section having a pair of longitudinally extending and laterally spaced parallel aligned arms 20 and 22. The arms are connected at corresponding ends thereof to a crossbar 24 which is perpendicular to the arms.

An important function of the yoke 12 is to support a laundry bag 26 so that soiled linens may be deposited therein. Specifically, a cuff 28 having a draw string 30, arranged around the upper perimeter of the laundry bag 26 is folded downwardly over the arms 20–22 and the bar 24, which are received within the cuff. A snug fit is effected when the draw string 30 is pulled tight. The top of the laundry bag 26 is thereby distended to form a mouth 32 into which the soiled linen is thrown.

The base 14 is horizontally disposed below the yoke 12 in a spaced parallel plane, and it is also generally U-shaped in plan. The base 14, however, is reversed from or oriented to extend in a direction opposite to the yoke 12. The base 14 is a bent rod section having a pair of longitudinally extending and laterally spaced parallel aligned arms 34 and 36 connected at the corresponding end thereof to a crossbar 38 perpendicular thereto.

The end of the arm 34 not connected to the lower crossbar 38 is joined to the lower end of the obliquely vertically disposed strut 16, to form an elbow joint 40. The end of the arm 20 of the yoke 12 not connected to the upper crossbar 24 is joined to the opposite upper end of the strut 16, to form an oppositely directed elbow joint 42. On the opposite side of the stand 10, the end of the arm 36 not connected to the lower crossbar 38 is joined to a lower end of the obliquely disposed strut 18, to form an elbow joint 44. The end of the arm 22 of the yoke 12 not connected to the crossbar 24 is joined to the opposite upper end of the strut 18 to form an elbow joint 46. The struts 16 and 18 preferably are in spaced parallel aligned relation, and they extend obliquely outwardly over the base frame 14 and under the supporting frame 12.

The upper arms 20 and 22 preferably are parallel to and lie in vertical planes with the respective lower arms 34 and 36, together with the respective connecting struts 16 and 18. The sides 48 and 50 of the stand thus preferably are aligned in spaced parallel vertical planes, and have a generally sinuous configuration, more particularly, a Z-shaped or zig-zag configuration. The yoke 12 preferably is superimposed on the base 14 in vertical alignment, the planes thereof being substantially parallel. As illustrated by the two positions in FIG. 3, the yoke resiliently moves slightly rearwardly of the base as it is loaded. Alternatively, the yoke may be disposed slightly forwardly of the base so that the two approach vertical alignment when loaded. In the illustrative embodiment, the yoke and the base have the same dimensions. However, the base may be extended to increase the stability, or it may be smaller than the yoke.

The sides 48 and 50 of the stand are bent rod sections

forming zig-zag springs which are resiliently compressible under load. They bend for the most part at the strut and arm elbow joints **40**, **42**, **44** and **46**. Some bending of the struts and arms may also take place. This construction affords a strong yet lightweight stand which does not incur permanent deformation under a heavy load, but yields under load and subsequently returns to its initial shape. A representative force P (FIG. 3) as would be applied by a loaded laundry bag **26**, thus will cause the angularity between the struts **16–18**, and the yoke **12** and base **14** to decrease as the load P is increased, bringing the base and yoke closer together. The center of gravity of the load is kept within the boundaries of the base, near the center of the base.

The laundry bag stand **10** preferably has a one-piece bent-rod construction. For example, it may be made from a single length of ⅜" diameter cold rolled steel rod, or from a tubular rod, it may have an overall height adapted for suspending a laundry bag above the floor of about 30". The rod is bent to provide the interconnected Z-shaped sides and the ends of the rods may be secured together as by a weld indicated at **52** in FIGS. 1 and 2. The bends produced preferably have smooth ample radii for bending and to eliminate sharp projections and obviate the possibility of tearing the laundry bag during installation or removal thereof.

Although the illustrative configurations of the yoke **12** and the base **14** are generally rectangular, it is also contemplated that the yoke **12** and base **14** may be made semi-circular or in other configurations to accommodate variously designed laundry bags. The struts **16–18** may be formed in shapes other than those shown in the drawings; for example, S-shaped strut elements provide the desired resilient support.

When the laundry bag **26** is installed on the stand **10** as previously described, the bag is suspended with its bottom **54** above the base **14** and a few inches off of the floor, with the top held in an open position to receive laundry. The stand is also constructed for supporting the laundry bag off of the floor when full, to allow air circulation below the bag. To remove the laundry bag **26** from the stand **10**, the draw string **30** is untied and the cuff **28** slipped off the yoke **12**. The laundry bag **26** then drops to the floor and can be removed from the stand by pulling either the bag or the stand horizontally, in the direction in which the arms extend, with no vertical lifting of either being required.

Several bag equipped stands **10** may be placed conveniently in an aligned row to receive soiled linens of different varieties, e.g., one for tablecloths, a second for napkins, and a third for towels. The illustrative stand **10** is generally rectangular in plan, and it may be aligned with others in compact side-by-side relation. When the bag stand **10** is not in use and is to be stored along with other stands of the same type, the several stands may be nested together so as to take up little storage space.

Another feature of the stand **10** in use is that no clips, lugs, fasteners, etc. are needed to secure the conventional commercial laundry bag to the stand. Also, the yoke **12** and the base **14** may be substantially the same size, so that their functions are interchangeable at will. Thus the bag stand **10** may be used either "upside down" or "rightside up."

It is apparent that there has been provided a laundry bag stand that is simple and economical in design and construction, and adapted to resiliently support a heavily loaded bag of soiled linen in a stable manner, which accomplishes the objects and advantages set forth above.

While a preferred embodiment of the invention has been described, it will be understood that various changes and modifications may be made therein, and it is intended to cover in the appended claim all such changes and modifications as fall within the true spirit and scope of the invention.

What is claimed is:

A bag stand of single-piece, resilient rod construction, comprising: a pair of spaced parallel aligned upright Z-shaped sides, each side including a substantially horizontal upper arm and a substantially horizontal lower arm of equal length, with said upper arm disposed directly above said lower arm, each said upper and lower arms of each said side being respectively joined at their opposite ends by a strut integral therewith; a first crossbar interconnecting the free ends of said upper arms and integral therewith; and a second crossbar interconnecting the free ends of said lower arms and integral therewith; said lower arms and said second crossbar providing a base for said stand, and said upper arms and said first crossbar providing a horizontally disposed yoke for receiving and supporting the upper marginal portion of a laundry bag or the like, the resilience of said arms and said struts permitting said yoke to be resiliently displaced directly toward said base when subjected to a load, the right-side-up and upside-down positions of said stand being indistinguishable, and said stand being adapted to be closely nested with like stands in storage.

References Cited by the Examiner

UNITED STATES PATENTS

822,277	6/06	Hotchkiss	248—175 X
945,520	1/10	Greenwood	248—175
1,052,379	2/13	Ranken	248—97 X

FOREIGN PATENTS

527,100	7/21	France.
68,229	10/29	Sweden.
94,734	2/39	Sweden.
13,656	11/96	Switzerland.

CLAUDE A. LE ROY, *Primary Examiner.*

FRANK L. ABBOTT, *Examiner.*