(No Model.) 2 Sheets—Sheet 1.

R. H. COON.

ROTARY ENGINE.

No. 590,453. Patented Sept. 21, 1897.

Fig. 2

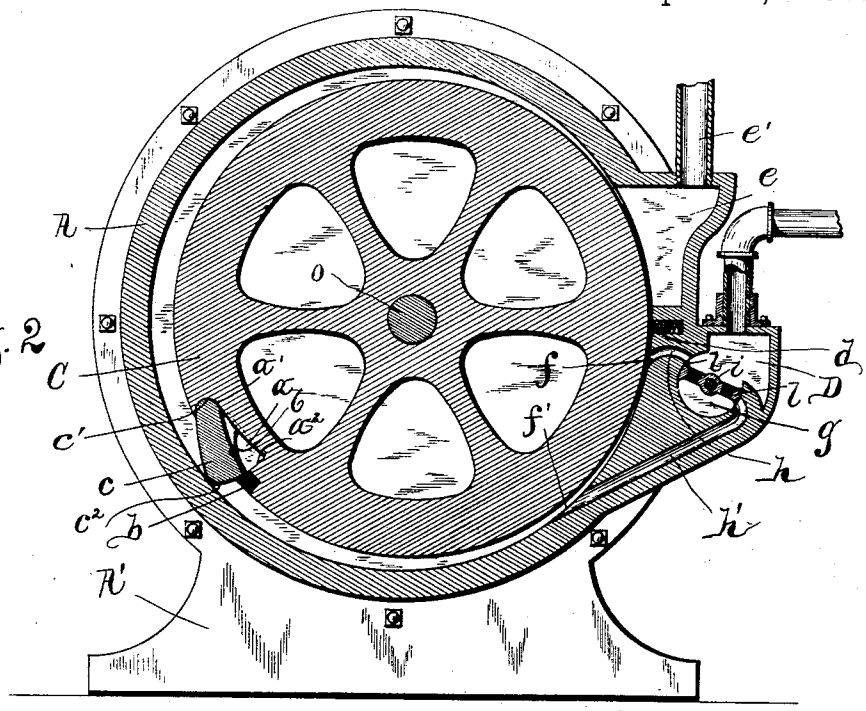

Fig. 1

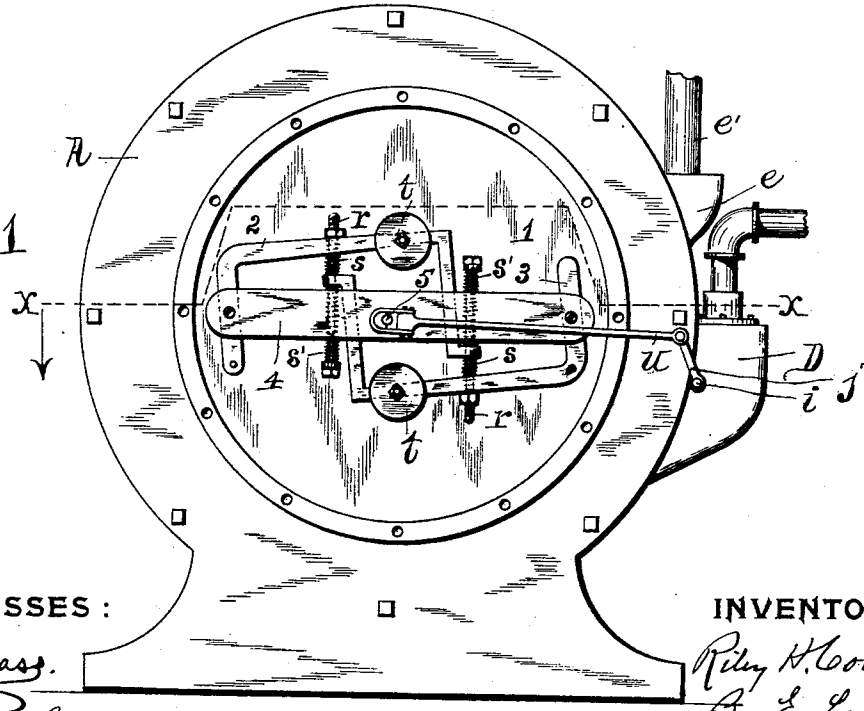

WITNESSES:

J. J. Laas.

M. A. Leydon.

INVENTOR

Riley H. Coon

By E. Laas

his ATTORNEY

THE NORRIS PETERS CO., PHOTO-LITHO., WASHINGTON, D. C.

(No Model.) 2 Sheets—Sheet 2.

R. H. COON.

ROTARY ENGINE.

No. 590,453. Patented Sept. 21, 1897.

Fig. 3

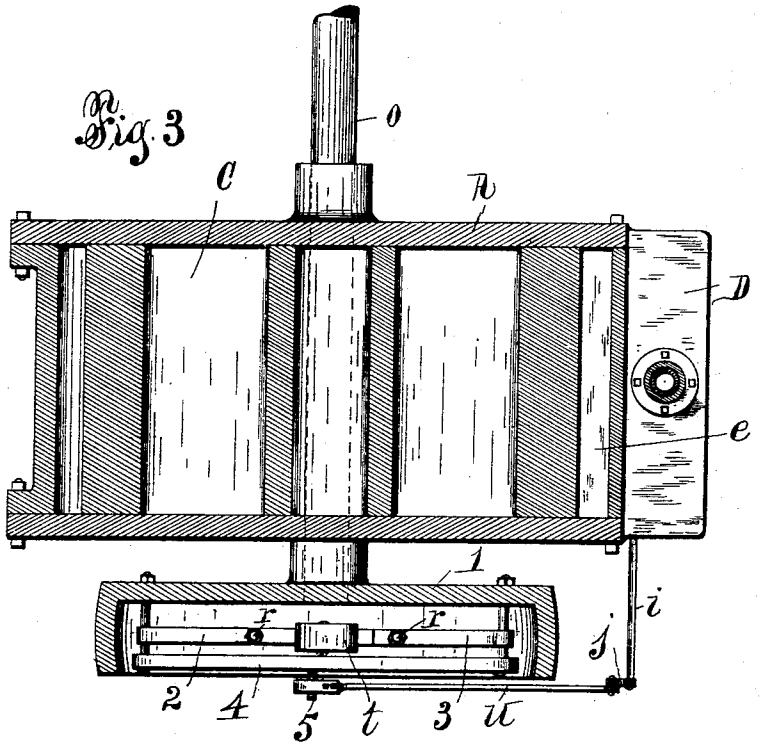

Fig. 4

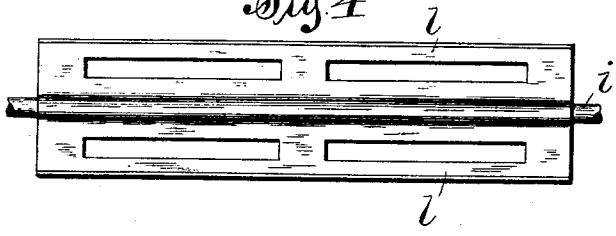

WITNESSES:

J. J. Laass.

M. A. Leyden

INVENTOR

Riley H. Coon

By E. Laass

his ATTORNEY

THE NORRIS PETERS CO., PHOTO-LITHO., WASHINGTON, D. C.

UNITED STATES PATENT OFFICE.

RILEY H. COON, OF CANASTOTA, NEW YORK.

ROTARY ENGINE.

SPECIFICATION forming part of Letters Patent No. 590,453, dated September 21, 1897.

Application filed February 8, 1897. Serial No. 622,480. (No model.)

To all whom it may concern:

Be it known that I, RILEY H. COON, of Canastota, in the county of Madison, in the State of New York, have invented new and useful Improvements in Rotary Engines, of which the following, taken in connection with the accompanying drawings, is a full, clear, and exact description.

This invention relates to the class of rotary engines in which a piston-cylinder is pivoted eccentric in a steam-cylinder and has the piston proper pivoted to the periphery of said piston-cylinder.

The object of the invention is to simplify the construction of the engine and at the same time increase its efficiency of operation; and to that end the invention consists in the improved construction and combination of the component parts of the engine, as hereinafter described, and set forth in the claims.

In the annexed drawings, Figure 1 is a side elevation of a rotary engine embodying my invention. Fig. 2 is a transverse section taken in a plane at right angles to the axis of the engine. Fig. 3 is a transverse section taken in a plane indicated by the dotted line X X in Fig. 1, viewed in the direction of the arrow; and Fig. 4 is an enlarged detail view of the cut-off valve.

Similar letters and figures of reference indicate corresponding parts.

A represents the outer or steam cylinder, which is provided with a suitable base A′, by which it is rigidly secured in position.

C denotes the inner or piston cylinder, which is pivoted at its center eccentric in the cylinder A and is of a diameter to bring the two cylinders in contact with each other at one point of the peripheries, at which point the steam-cylinder is provided with an adjustable packing *d*, which serves to prevent passage of steam thereat.

The periphery of the piston-cylinder C is provided with a recess *a*, one end of which is terminated with a segmental concaved socket *a′* and the opposite end is formed with a concaved face a^2, in which is placed a metallic packing-strip *b*. In said recess is placed the oscillatory piston *c*, which is seated at one end directly on the concave face of the socket *a′*, with which it is caused to form a steam-tight joint by the pressure of the steam against the opposite end of the piston. The free end of the piston is formed with the convex face c^2, by which it is in constant close contact with the packing-strip *b* to prevent the steam from passing between the face of the piston and face of the recess. The pressure of the steam on the free end of the piston forces the latter into the socket *a′*, and thereby renders the same self-tightening, which effect is not assured by pivoting the piston to the cylinder by means of a pin passing through the piston.

e represents the exhaust-port, which is in the periphery of the steam-cylinder at a point at one side of or back of the packing *d* or point of contact between the two cylinders.

e′ is the exhaust-pipe, which communicates with said port. At the opposite side of said point of contact the steam-cylinder A receives steam, preferably through ports *f* and *f′*, located different distances from said point of contact. Over this part of the steam-cylinder is the steam-chest D, which is provided with an annular valve-chamber *g*, from which extend the two channels *h* and *h′*, which communicate, respectively, with the ports *f f′*. Central through the valve-chamber passes a shaft *i*, which is journaled in the ends of said chamber and has one end protruding therefrom and provided with a crank *j* thereon for turning the shaft. To this shaft are affixed two valves *l l*, which traverse the steam-ports in the valve-chamber and are so arranged as to cause the port adjacent to the packing *d* or point of contact between the two cylinders to be opened in advance of the other port, and thus admit steam into the steam-cylinder A first at the narrowest part of the space between the two cylinders A and C and subsequently an additional amount of steam into the wider part of the aforesaid space, and thus increase the application of the power commensurate with the space for the expansion of the steam in the steam-cylinder.

I preferably employ only one piston *c* and arrange the valves *l l* and their actuating mechanism so as to cut off the steam at the time when said piston has traveled about one-third of the circumference of the steam-cylinder and employ the remainder of the

steam-space from thence to the exhaust-port for expansion of the steam, whereby I increase the efficiency of the engine.

For operating the valve-shaft *i* I employ a centrifugal governor, actuated by the shaft *o* of the piston-cylinder. The construction of said governor is the subject-matter of another application for Letters Patent contemplated by me. This governor I prefer to form as follows: To the shaft *o* is fastened a plate 1 at the center thereof. Two elbow-levers 2 and 3 are disposed reverse from each other, and one of said levers, 2, is pivoted at the end of its short arm to the face of the plate 1 at a point remote from the shaft *o*. The other of said levers, 3, is pivoted at the junction of its two arms to the face of the aforesaid plate at a point located at the same side and same distance from the shaft *o* as the pivot of the lever 2. The long arms of said levers extend along opposite sides of and beyond the shaft *o*, and each of said arms is coupled at its free end to the other of said arms by means of a rod *r*, provided with nuts on opposite ends and of sufficient length to permit a spiral spring *s* to be interposed between the two arms and another spiral spring *s'* to be interposed between the free end of one of the arms and nut on the end of the rod. The governor is thus effectually cushioned in its action. To each of said long arms is attached a weight *t*, which by centrifugal force received during the rotation of the engine imparts oscillatory motion to the two levers 2 and 3.

A bar 4 is pivotally connected at opposite ends to the short arms of the aforesaid levers, and to said bar is fastened the eccentric or wrist-pin 5, which is concentric with the shaft *o* when the engine is at rest and is caused to move to and from concentricity by the oscillations of the levers 2 and 3, imparted to them during the operation of the engine or rotation of the piston-cylinder C. Said eccentric or wrist-pin is connected with the crank on the valve-shaft *i* by a rod U, and thus operates the said shaft.

The hereinbefore-described piston *c* is forced at its free outward end into contact with the inner periphery of the steam-cylinder A by means of a suitable spring 6.

What I claim as my invention is—

1. The combination of the steam-cylinder and the piston-cylinder pivoted at its center eccentric in said steam-cylinder and disposed with one point of the peripheries of said cylinders in contact with each other, a piston pivoted to the periphery of the piston-cylinder, the exhaust-port at one side of the point of contact of the cylinders, a steam-chest provided with an annular valve-chamber having two steam-ports communicating with the steam-cylinder at different distances from the opposite side of the aforesaid point of contact, a shaft pivoted central in said valve-chamber, two valves fixed to said shaft and traversing respectively the two steam-ports, the steam-pipe communicating with the aforesaid valve-chamber, a crank on the end of the valve-shaft, an eccentric receiving motion from the piston-cylinder, and a rod transmitting motion from said eccentric to the aforesaid crank as set forth.

2. The combination of the steam-cylinder, piston-cylinder pivoted at its center eccentric in said steam-cylinder and disposed with one point of the peripheries of the two cylinders in contact with each other, and the piston pivoted to the periphery of the piston-cylinder, the exhaust-port at one side of the point of contact of the two cylinders, a steam-chest provided with an annular valve-chamber having two steam-ports in different parts of the periphery thereof and communicating with the steam-cylinder at different distances from the opposite side of the aforesaid point of contact, a shaft pivoted in opposite ends and central of the said valve-chamber, the steam-pipe leading to said chamber, two valves attached to said shaft and in positions to cause the steam-port adjacent to the point of contact of the two cylinders to be opened in advance of the other of said ports, a centrifugal governor actuated by the shaft of the piston-cylinder, and mechanism transmitting motion from said governor to the aforesaid valve-shaft as set forth.

In testimony whereof I have hereunto signed my name this 30th day of January, 1897.

RILEY H. COON. [L. S.]

Witnesses:
J. J. LAASS,
H. B. SMITH.