July 3, 1951 J. KLIEGL 2,558,964

IRIS PROTECTION APPARATUS FOR HIGH-INTENSITY SPOTLIGHTS

Filed Dec. 16, 1948 3 Sheets-Sheet 1

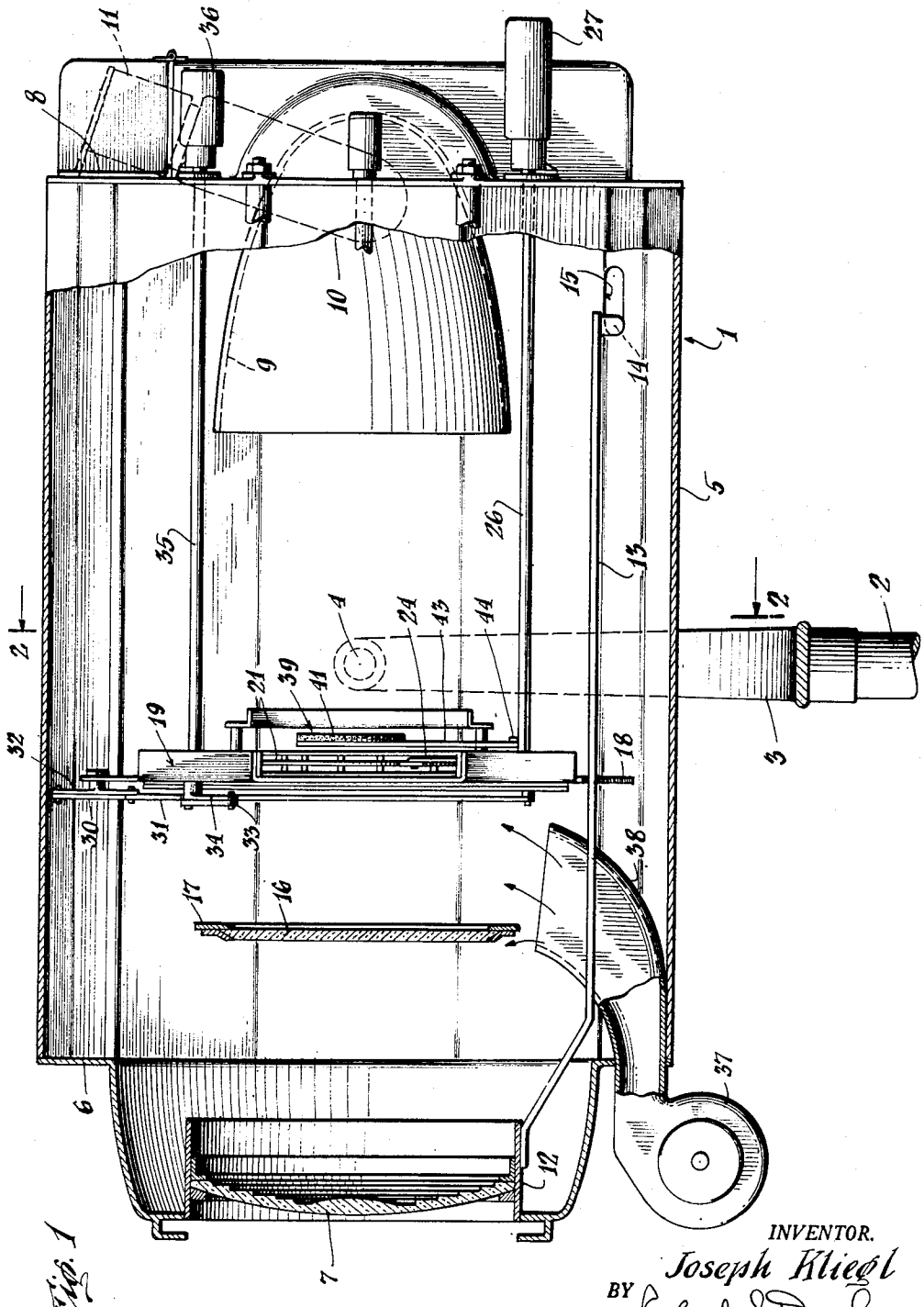

Fig. 1

INVENTOR.
Joseph Kliegl
BY Robert S. Dunham
ATTORNEY

July 3, 1951 J. KLIEGL 2,558,964

IRIS PROTECTION APPARATUS FOR HIGH-INTENSITY SPOTLIGHTS

Filed Dec. 16, 1948 3 Sheets-Sheet 2

Fig. 2

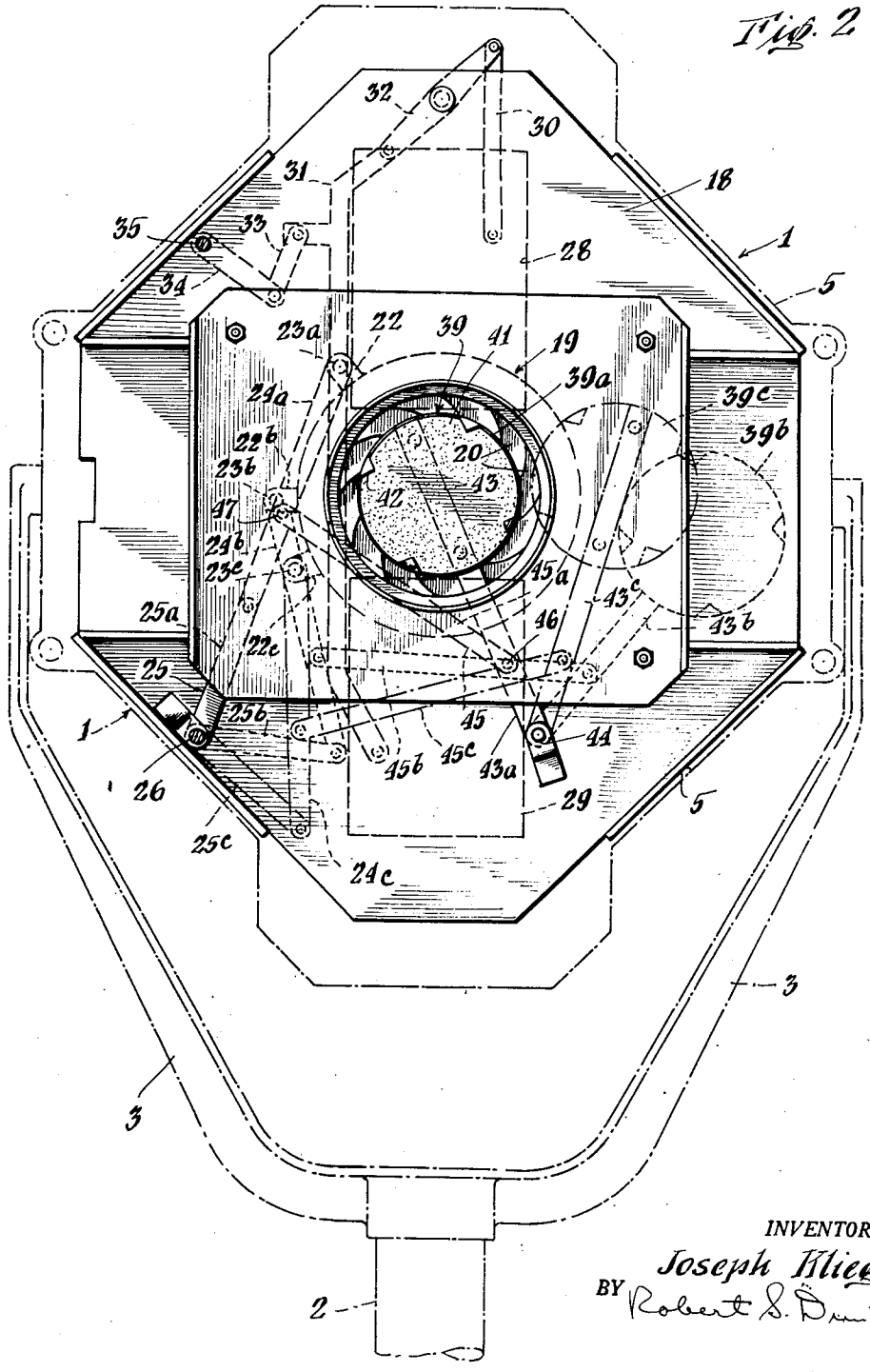

INVENTOR.
Joseph Kliegl
BY Robert S. Duncan
ATTORNEY

July 3, 1951 J. KLIEGL 2,558,964

IRIS PROTECTION APPARATUS FOR HIGH-INTENSITY SPOTLIGHTS

Filed Dec. 16, 1948 3 Sheets-Sheet 3

Fig. 3

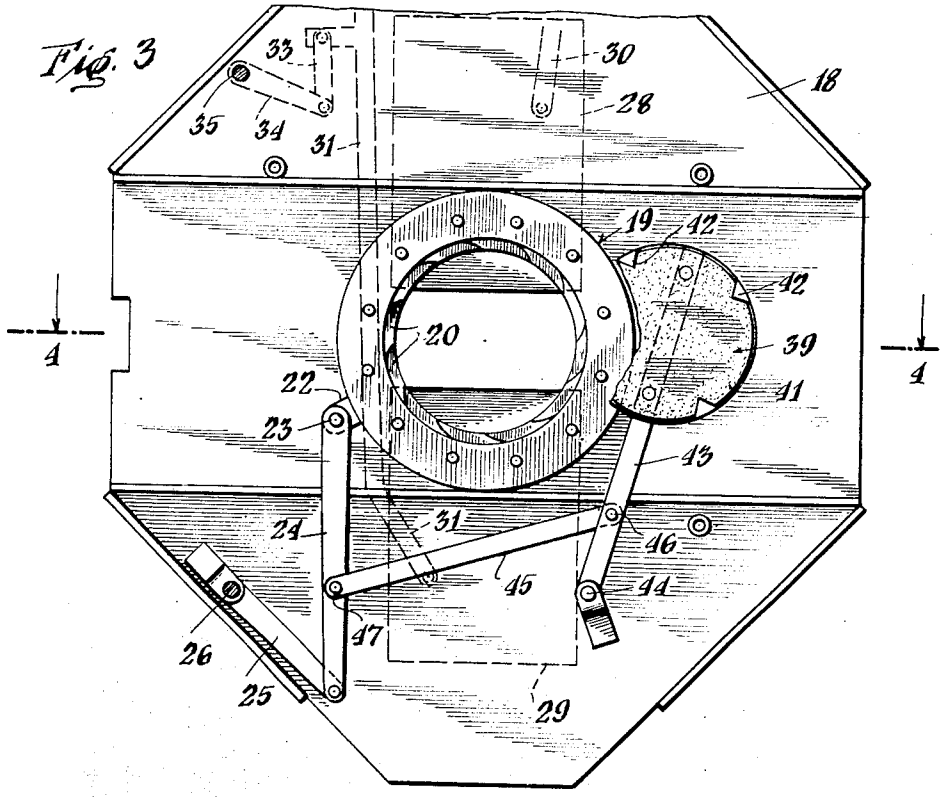

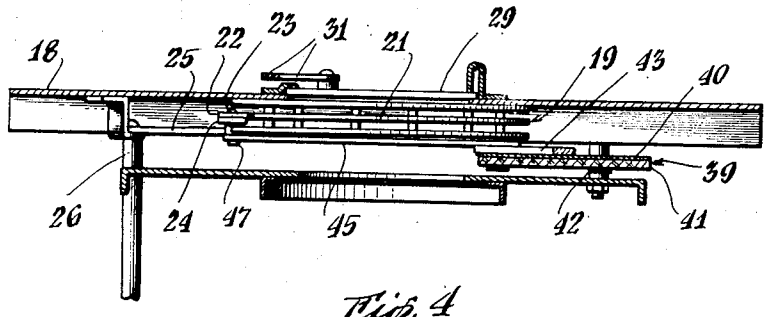

Fig. 4

INVENTOR.
Joseph Kliegl
BY Robert S. Dunham

ATTORNEY

Patented July 3, 1951 2,558,964

UNITED STATES PATENT OFFICE

2,558,964

IRIS PROTECTION APPARATUS FOR HIGH-INTENSITY SPOTLIGHTS

Joseph Kliegl, Queens Village, N. Y., assignor to Kliegl Bros. Universal Electric Stage Lighting Co., Inc., New York, N. Y., a corporation of New York

Application December 16, 1948, Serial No. 65,594

4 Claims. (Cl. 240—47)

1

This invention relates to iris protection apparatus for a high intensity spotlight, and more particularly to such apparatus, applicable to spotlight equipment having a high powered light source, which generates great heat in the form of radiant heat energy, for protecting the iris apparatus conventionally used with such spotlights from damage by radiant heat.

In modern types of spotlights of the type conventionally known as "Klieglights," such as are in common use in the larger theaters and in moving picture and television studios, it has become common to use higher and higher powered sources of illumination. Even if conventional means be resorted to for ventilating such apparatus by fans or other equipment of a similar nature, the light sources transmit large amounts of heat by radiant energy alone, which cannot be diminished in intensity by any ventilation or air circulation means. It is necessary, therefore, that all the portions of the spotlight apparatus which is subject to such intense heat radiation be constructed in a manner and from material which will be proof against substantial damage by radiant heat energy in order that the apparatus as a whole have a reasonable life. This is a relatively simple matter as to stationary walls and other parts not required for the transmission of light and particularly as to parts which are not in the direct focused beam of the radiant energy. It is common, however, to use iris shutter apparatus in conjunction with such spotlights which include a plurality of simultaneously movable segments adjustable by a suitable manually operated means for predetermining the diameter of the spot of light produced by the apparatus as a whole. It is further conventional in such apparatus that the iris shutter means shall be adjusted within certain limits, one of which is a completely closed position, thus shutting off the spot by adjustably reducing its diameter to zero. Inasmuch as the means normally used for making the segments of the iris shutter apparatus are relatively sensitive to heat, and as such apparatus is and must be in the direct focused beam of the light and heat energy, these shutters or segments of the iris shutter apparatus are particularly vulnerable to radiant heat.

It is, of course, possible to direct a blast of cooling air onto such apparatus so as to tend to keep it sufficiently cool to prevent damage thereto. However, such means, which may be classed broadly as ventilation means, are often inadequate to protect the iris shutter apparatus. This is particularly true where the source of light may be a high intensity incandescent bulb having a rating of the order of magnitude of 3,000 watts or more. Under such circumstances, further and particular protection means must be povided in

2

order that the iris shutter apparatus shall have an appreciable normal life. The provision of such a protection means is therefore a primary object of the present invention.

A further and more detailed object of the present invention is to provide a heat absorbing shutter mounted in the spotlight apparatus between the light source and the iris shutter apparatus, along the path of radiant heat energy from the light source and movable into and out of a position to intercept radiant energy from this light source, so as to protect the iris shutter apparatus when it is adjusted to its closed position aforesaid.

It is necessary, of course, that the heat absorbing shutter be movable out of a position in which it will intercept any part of a beam of light which may pass through the iris shutter apparatus at any of the practical or usable open positions of the latter. For this reason, means are preferably provided in accordance with the present invention to prevent movement of the heat absorbing shutter into a light beam intercepting position during the time the iris shutter apparatus is open at any one of its adjusted positions. The provision of such means is a further object of the present invention.

A further and detailed object of the present invention is to provide a common means for adjusting the iris shutter apparatus between its several operative positions and preferably to and including a fully closed position, and also for moving the heat absorbing shutter to and from a position in which it will protect the iris shutter apparatus during the time the latter is closed.

Other and more detailed objects of the present invention will appear from the following particular description of a preferred embodiment thereof and will be pointed out in the appended claims, all when considered in connection with the accompanying drawings, in which:

Figure 1 is a view substantially in longitudinal vertical section of a spotlight apparatus embodying the present invention;

Fig. 2 is a view substantially in transverse vertical section, taken on the line 2—2 of Fig. 1 illustrating the operation of the apparatus in several positions;

Fig. 3 is a fragmentary view, similar to that of Fig. 2, showing some of the operating mechanism and showing the parts in a position in which the iris shutter apparatus is fully opened; and

Fig. 4 is a fragmentary detailed view substantially in horizontal section on the line 4—4 of Fig. 3.

There is first described the spotlight apparatus as a whole and the portions thereof which are essentially similar to prior and known types of such apparatus with the possible exception of

the size of the parts. The spotlight apparatus is generally indicated at 1, and is supported upon a suitable standard 2 having a two-armed bracket 3 in which are pivoted trunnions 4 carried by the apparatus 1. Suitable means (not shown) may be provided for securing an adjustment of the angular position of the apparatus 1 in respect to the standard 2 and bracket 3 about the axis of the trunnions 4.

The spotlight appartus 1 may be built up in any suitable form and be of any desired construction, usually sheet metal. As shown, it comprises a substantially octagonal casing 5 having a front end wall structure 6 containing a suitable lens 7 such as a Fresnel lens and also having a rear wall structure 8. Mounted in the rear wall structure 8 is a suitable ellipsoidal reflector 9 associated with which is a high intensity light source, here shown as an incandescent bulb 10. The bulb 10 is conventionally removably mounted in a suitable socket means 11 appropriate for the type of bulb used. It will be understood that conventional type conductors may be supplied in a manner not shown and one or more switches may be provided for controlling the operation of the bulb 10. While the light source is herein shown as an incandescent bulb, it will be understood that other types of light sources, including an electric arc, could be used if desired. Means are provided as shown for moving the lens 7 in a direction axial of the spotlight apparatus 1 for changing the focus in a conventional manner. As shown the lens 7 is held in an annular mounting means 12, which is slidably mounted in a suitable portion of the front end wall 6 and is connected through a bar 13 to a suitable operating handle (not shown) through a portion 14 rigid with the bar 13 and extending through an elongate slot 15 in the casing 5.

Disposed within the casing 5 is a suitable spread lens means shown conventionally at 16 and held in a suitable mounting generally indicated at 17 to the frame of the apparatus, i. e. the casing 5.

Intermediate the ends of the casing 5 there is disposed a transverse wall generally indicated at 18, this wall being suitably secured to the casing 5 in a manner not particularly illustrated and serving to support the iris shutter apparatus, horizontal cut off shutter apparatus of a substantially conventional nature, both as hereinafter described, and the iris shutter protecting means, which latter forms the particular subject matter of the present invention.

The iris shutter apparatus is indicated generally at 19 and per se may be of a conventional type. As such, it includes a plurality of individually adjustable segments 20, which are suitably shaped, mounted and pivoted, so that they may be all simultaneously adjusted and in effect define a substantially circular opening, the diameter of which is adjustably variable between a zero or fully closed position and a maximum diameter provided by the apparatus, all by a single adjustment. This adjustment in practice is effected by means of an annular member 21, Fig. 4, concentric with the iris shutter apparatus and having a radially outwardly extending tab 22 thereon, Figs. 2 and 3, to which may be connected a suitable operating and adjusting means hereinafter described. It will be understood that by moving the tab 22, so that a pintle 23 secured therein and designated in its three positions shown in Fig. 2, 23*a*, 23*b* and 23*c*, the iris shutter

apparatus will be moved from its fully closed position corresponding to position 23*a*, through an intermediate position corresponding to 23*b*, to a fully open position corresponding to 23*c*.

Conventional means may be employed for moving the iris shutter apparatus between its several positions aforesaid and also many intermediate positions not particularly illustrated, in any desired manner. Such means in the present instance includes a link 24 shown at the fully closed position of the iris at 24*a*, Fig. 2, at an intermediate position at 24*b*, and at the fully open position of the iris at 24*c*. This link 24 is pivoted to the tab 22 at the pintle 23 aforesaid and is pivoted at its other end to a crank arm 25, which is shown in the three positions aforesaid at 25*a*, 25*b* and 25*c*, respectively. The crank arm 25 may be suitably secured to the inner end of a rotatable shaft 26, which is pivoted in the transverse wall 18 and also in a part of the rear wall structure 8. The shaft 26 carries at its outer end a suitable handle 27 by which the iris may be adjusted in a conventional manner.

Means may also be provided in a substantially conventional manner for providing a horizontal cut-off, so as to provide a light spot having substantially horizontal upper and lower boundaries, rather than a circular or oval spot. This means as shown comprises a pair of upper and lower shutters 28 and 29 respectively, mounted for substantially vertical simultaneous movement in suitable guides in the front (left as seen in Fig. 1) side of the transverse wall 18. These shutters may be of any suitable heat resistant material such as stainless steel. The guides in which the shutters are mounted are shown in Fig. 4 and may be considered as conventional in character.

For operating the horizontal cut-off shutters 28 and 29, these shutters are respectively connected to the lower ends of the links 30 and 31, the upper ends of these links being respectively pivoted to the opposite ends of a rocking beam 32, which is pivoted at its center to a suitable fixed part of the apparatus such as the transverse wall 18. For actuating this linkage, the link 31 is shown provided with a laterally extending projection, which is connected by a link 33 to the outer end of a crank arm 34. This crank arm is carried by an actuating shaft 35, which is suitably pivoted in the wall 18 and in the rear wall structure 8 and is provided with an actuating handle 36 at its rear end, accessible to the operator of the apparatus as in the case of the handle 27.

The apparatus thus far described in detail may be assumed to be entirely conventional as to type and novel only as to the particular size and possibly certain special arrangements thereof as will hereinafter be more particularly pointed out.

In devices of this kind, wherein an iris shutter is provided, it is substantially essential as aforesaid to protect the adjustable segments of the iris from damage by radiant heat generated by the light source. This is especially true when using a high intensity light source such as a 3,000 watt incandescent bulb. The iris shutter segments are constructed of material which will be to a maximum extent heat resistant, both as to melting down, and also as to warping or any other manner in which this material could be substantially damaged. Conventionally, these adjustable segments may be made of stainless steel, although the particular construction material is not a part of the present invention.

It may and often is desirable to provide venti-

lation means tending as far as possible to protect the iris shutter apparatus, and particularly the adjustable segments thereof, from damage by heat and by dissipating to a maximum extent the heat transmitted to it in any way. For this purpose there is shown a fan or blower apparatus 37 having an outlet duct 38 directed generally toward the front side of the iris apparatus as particularly shown in Fig. 1. It will be understood that the casing 5 will be provided with suitable ventilation ports, permitting the escape of the heated air.

It is contemplated, however, in accordance with the present invention that the blower 38 or any blower means which can reasonably be provided will be inadequate completely to protect the iris shutter apparatus and particularly the adjustable segments thereof from heat damage, especially when the iris shutter is completely closed and while the source of light remains in full operation. This is due to the fact that much of the heat is transmitted from the light source to the iris shutter apparatus, and particularly to the adjustable segments thereof, in the form of radiant heat energy, the rays of which are focused upon these segments by the ellipsoidal reflector 9. It will further be understood that any ventilation provided cannot in any way interfere with the transmission of radiant heat to the iris shutter apparatus, even though such ventilation may be effective in tending to cool the iris shutter apparatus once it has been heated, or to dissipate heat which has first been received by such apparatus by radiation or otherwise.

In order adequately to protect the iris shutter apparatus, particularly when the iris is completely closed, there is provided in accordance with the present invention a heat absorbing shutter indicated generally at 39. This heat absorbing shutter is preferably movable to and from a position to intercept radiant heat flow from the light source to the sensitive portions at least of the iris shutter apparatus, i. e. the adjustable segments thereof. As such, the shutter 39 may be substantially circular in shape, conforming in its diameter to the maximum dimensions of the segments of the iris shutter apparatus when the latter are closed, or being slightly larger, so as to protect some of the outwardly disposed portions of the iris shutter apparatus.

This shutter 39 may be formed as a metallic disc 40, coated or covered with a suitable heat absorbing medium or composition 41, which may be an asbestos sheet or some equivalent heat resistant material. As particularly shown herein, tab portions 42 extend integrally from the metallic plate 40 and may be bent over portions of the periphery of the composition 41 to hold it in place.

While it is conceivable that the heat absorbing shutter generally indicated at 39 may be mounted for movement into and out of an iris protecting position in any suitable way, there is provided as particularly disclosed herein a mounting in which this heat absorbing shutter is carried rigidly by an arm 43 pivoted at 44 on a fixed axis parallel to the light axis of the apparatus, i. e. parallel to the rods 13 and 35. As such the shutter is movable between the three positions 39*a*, 39*b* and 39*c* shown in Fig. 2.

It is important in an apparatus of this kind that the shutter 39 be prevented from interfering with the flow or path of light through the iris when the latter is open at any one of its open adjusted positions. For this reason it is preferable to provide some interlocking means, preferably mechanical in nature, between the iris adjustment means hereinabove described and the means for operating the shutter 39. A preferred arrangement is that shown in the drawings, wherein the shutter 39 is mechanically and manually operated by the same means by which the iris is adjusted, so that the operation of the iris and of the shutter 39 are necessarily coordinated at all times. As shown a link 45 is provided connecting a point 46 on the arm 43 with a point 47 on the link 24 as shown.

The arrangement and geometry of the linkage is best shown in Fig. 2, wherein the link 45 is shown in three positions at 45*a*, 45*b* and 45*c* respectively, these positions corresponding to the positions of other parts having the letters *a*, *b* and *c* respectively associated therewith. Thus when the iris is completely closed with the parts in the "*a*" position shown in Fig. 2, the shutter 39 will occupy a position substantially concentric with the iris and will protect it completely from damage by radiant heat from the light source. As the handle 27 is rotated clockwise as seen from the right in Fig. 1, so as to rotate the rod 26 clockwise as seen in Fig. 2, the shutter 39 is first moved rapidly to the right as seen in Fig. 2, so as to displace it from alignment with a path of light through the iris even when the latter is open to a minimum operative extent. As a practical matter at the time the iris is opened to an inside diameter of approximately ¼'' or somewhat less, the shutter 39 is completely out of alignment with the path of light through the iris opening and is moving toward the position 39*c*, i. e. intermediate the positions 39*a* and 39*c* shown in the drawings, Fig. 2. As the iris is further opened, and at the time it is opened at the "*b*" position shown in the drawings, the shutter 39 has been moved to its extreme right-hand position shown at 39*b*. As the iris is further opened, to its extreme open position shown for example in Fig. 3, the shutter 39 is moved to the left (as seen in Figs. 2 and 3) from its extreme right hand position and to the position 39*c* shown in full lines in Fig. 3 and in dotted lines in Fig. 2. Even at this intermediate position in the extreme amplitude of movement of the shutter 39, it is completely out of alignment with all light passing through the fully opened iris shutter. The reverse operation occurs upon the closing of the iris, so that upon the initial closing movement of the crank arm 25, for example from the position 25*c* to the position 25*b*, the shutter 39 moves from position 39*c* to the right as seen in Fig. 2 to positon 39*b*. Further movement of the crank arm 25 from position 25*b* to position 25*a* results in movement of the shutter 39 from position 39*b*, to the left as seen in Fig. 2, to position 39*a*, thus protecting the iris, or at least the sensitive parts thereof, to a maximum extent consistent with the use of the device with various diameters of the iris openings.

While there is herein shown and described but one preferred embodiment of the present invention, the principles have been pointed out in a manner from which it will be apparent to those skilled in the art how many equivalent constructions could be made embodying the present invention and attaining the objects thereof. I do not wish to be limited, therefore, except by the scope of the appended claims, which are to be construed validly as broadly as the state of the prior art permits.

What is claimed is:

1. In a spotlight apparatus having a high powered light source which generates great heat in the form of radiant heat energy, and including a manually adjustable iris shutter apparatus spaced a predetermined distance from said light source for determining the diameter of the light spot and for cutting off the spot altogether when the iris shutter apparatus is in a closed position, and manual means for adjusting said iris shutter between its closed position and positions in which a substantial spot of light of adjustably variable diameter is transmitted through the iris shutter apparatus, in combination, a heat absorbing shutter mounted in said spotlight apparatus between said light source and said iris shutter apparatus along the path of light and radiant heat energy from said light source, and movable into and out of a position to intercept radiant energy from said light source, so as to protect said iris shutter apparatus when it is adjusted to its closed position aforesaid, means for moving said heat absorbing shutter to a position to protect said iris shutter apparatus from damage by radiant heat from said light source at the closed position of said iris shutter apparatus, and mechanical means interconnecting said means for adjusting said iris shutter and said means for moving said heat absorbing shutter for preventing movement of said heat absorbing shutter to a position such that it will intercept light through the iris when the iris is at any one of its open positions at which a substantial spot of light is provided by the spotlight apparatus.

2. In a spotlight apparatus having a high powered light source which generates great heat in the form of radiant heat energy, and including a manually adjustable iris shutter apparatus spaced a predetermined distance from said light source for determining the diameter of the light spot and for cutting off the spot altogether when the iris shutter apparatus is in a closed position, in combination, a heat absorbing shutter mounted in said spotlight apparatus along the path of light and radiant heat energy from said light source, and movable into and out of a position to intercept radiant energy from said light source, so as to protect said iris shutter apparatus when it is adjusted to its closed position aforesaid, and a single common control means accessible to an operator of the spotlight apparatus mechanically connected to adjust said iris shutter apparatus between its closed position and any of its open adjusted positions and also mechanically connected to move said heat absorbing shutter to and from a position to protect said iris shutter apparatus from damage by radiant heat from said light source at the closed position of said iris shutter apparatus.

3. In a spotlight apparatus having a high powered light source which generates great heat in the form of radiant heat energy, and including a manually adjustable iris shutter apparatus spaced a predetermined distance from said light source for determining the diameter of the light spot and for cutting off the spot altogether when the iris shutter apparatus is in a closed position, in combination, a heat absorbing shutter mounted in said spotlight apparatus between said light source and said iris shutter apparatus along the path of light and radiant heat energy from said light source, and movable into and out of a position to intercept radiant energy from said light source, so as to protect said iris shutter apparatus when it is adjusted to its closed position aforesaid, a rotatable handle accessible from outside said spotlight apparatus, a mechanical linkage between said rotatable handle and said iris shutter apparatus so constructed and arranged that rotation of said handle will be effective to adjust said iris shutter apparatus between the closed position thereof and its several open adjusted positions, means mounting said heat absorbing shutter for movement about a fixed axis, and a second linkage connected to and actuated by the first named linkage for rotating said heat absorbing shutter about its axis to move it as aforesaid, the second named linkage being so constructed and arranged that said heat absorbing shutter will be moved to a position to protect said iris shutter apparatus from damage by radiant heat from said light source at the closed position of said iris shutter apparatus.

4. In a spotlight apparatus having a high powered light source, which generates great heat in the form of radiant heat energy, reflecting means for directing radiant energy from said light source along a predetermined light axis, and including a manually adjustable iris shutter apparatus spaced a predetermined distance from said light source along said axis for determining the diameter of a light spot and for cutting off the spot altogether when the iris shutter apparatus is in a closed position, in combination, a heat absorbing shutter mounted in said spotlight apparatus for movement about an axis eccentric of the first named axis and parallel therewith and movable between said light source and said iris shutter appratus along the axis of the path of light from said source to intercept radiant energy from said light source, so as to protect said iris shutter apparatus when it is in its closed position aforesaid, an adjusting rod arranged for rotation about an axis substantially parallel to said light axis and having a handle means secured thereto outside said spotlight apparatus accessible to an operator thereof, crank means secured to said adjusting rod, a link extending between said crank means and a point on said iris shutter apparatus for adjusting the iris shutter apparatus between its closed position aforesaid and positions at which it determines the diameter of a light spot, and a link connecting a point on the first named link with a point fixed in respect to said heat absorbing shutter so as to move said heat absorbing shutter in a manner which is a function of the adjusted movement of the adjustment of said iris shutter apparatus, said links being so proportioned, constructed and arranged that said heat absorbing shutter will always be maintained out of the path of light through said iris shutter apparatus when the latter is open at any position at which a usable spot of light is provided, and so that said heat absorbing shutter will be moved to a position to protect said iris shutter apparatus from damage by radiant heat from said light source at the closed position of said iris shutter apparatus.

JOSEPH KLIEGL.

REFERENCES CITED

The following references are of record in the file of this patent:

UNITED STATES PATENTS

Number	Name	Date
1,937,379	Berg	Nov. 28, 1933
2,076,240	Levy	Apr. 6, 1937