Jan. 2, 1945. F. OSTLING 2,366,350

WORK-HOLDING CLAMP

Filed Aug. 14, 1942

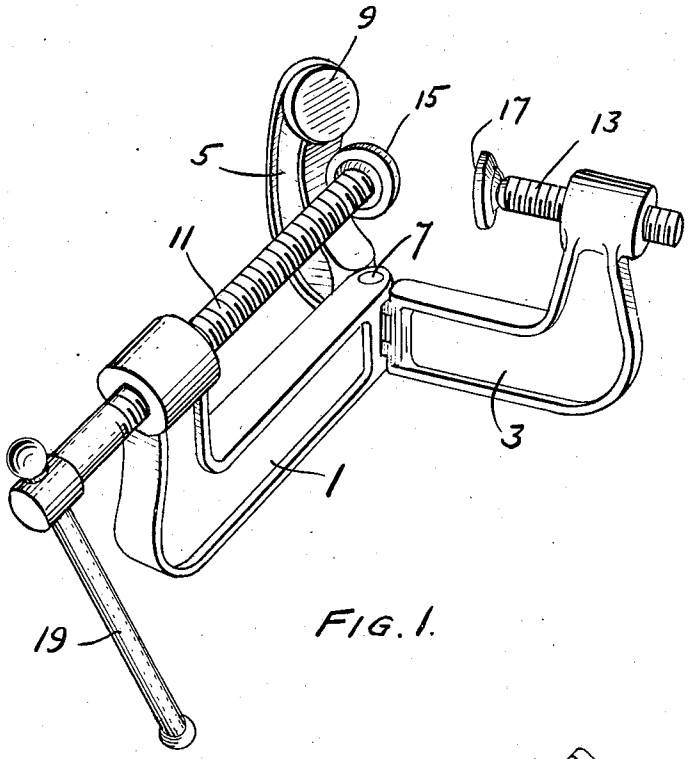

FIG. 1.

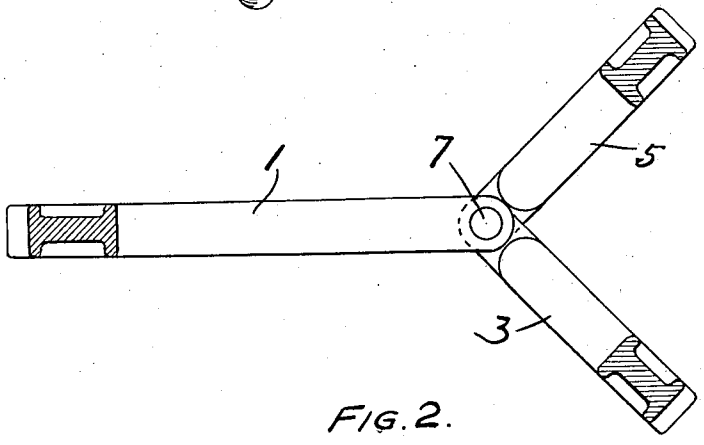

FIG. 2.

INVENTOR

Felix Ostling

BY

Busser & Harding

ATTORNEYS.

WITNESS:

Robt. R. Kitchel

Patented Jan. 2, 1945 2,366,350

UNITED STATES PATENT OFFICE

2,366,350

WORK-HOLDING CLAMP

Felix Ostling, Bristol, Tenn., assignor to Universal Moulded Products Corporation, Bristol, Va., a corporation of Delaware

Application August 14, 1942, Serial No. 454,783

1 Claim. (Cl. 144—304)

This invention relates to an improved work-holding clamp, more particularly to a clamp for holding strips of wood together until the glue used for uniting them has set.

The improved clamp in accordance with my invention is especially designed for use in gluing a T-joint, as where a transverse strut or other reinforcing member is glued to a longitudinal stiffener or other member.

In the accompanying drawing, which illustrates a preferred embodiment of my invention:

Figure 1 is a perspective view of one form of my improved clamp; and

Figure 2 is a sectional view through the same.

The clamp shown in the drawing is formed from three metal arms 1, 3 and 5, respectively generally of L shape and I-cross section, which are pivotally secured to one another by a pivot pin 7 passing through ears or lugs formed at one end of each of the arms. The arm 5 is provided at its opposite end with a fixed bearing plate or abutment 9; while arms 1 and 3 end in hubs threaded to receive screws 11 and 13. The screws 11, 13 are provided with bearing plates 15, 17, connected to the screws by ball and socket joints; and screw 11 is also provided with a handle 19 of conventional type.

The clamp is thus so constructed that the bearing plates 9, 15, 17 are all in one plane, but may be positioned at any angle to one another in that plane.

It will be appreciated that the bearing plates 9, 15, 17 need not have flat surfaces, but one or more may be provided with angular or rounded bearing surfaces to facilitate use of the clamp.

If desired additional arms may be provided.

What I claim and desire to protect by Letters Patent is:

A clamp of the character described comprising three L shaped arms pivotally connected at one end to one another about a common axis, an abutment support mounted at the other end of each of said L shaped arms, an abutment at the end of each support, the longitudinal axes of the supports for all of said abutments being substantially in a common plane extending at right angles to the axis of the pivotal connection and spaced above the locus of the pivotal connection, and at least two of said abutment supports being externally threaded shafts journaled in internally threaded bearings with which the corresponding other ends of said L shaped arms are provided for movement toward and from the common axis.

FELIX OSTLING.