Oct. 11, 1932. H. PARKER 1,881,911

CORE FOR TEXTILES

Filed March 28, 1930

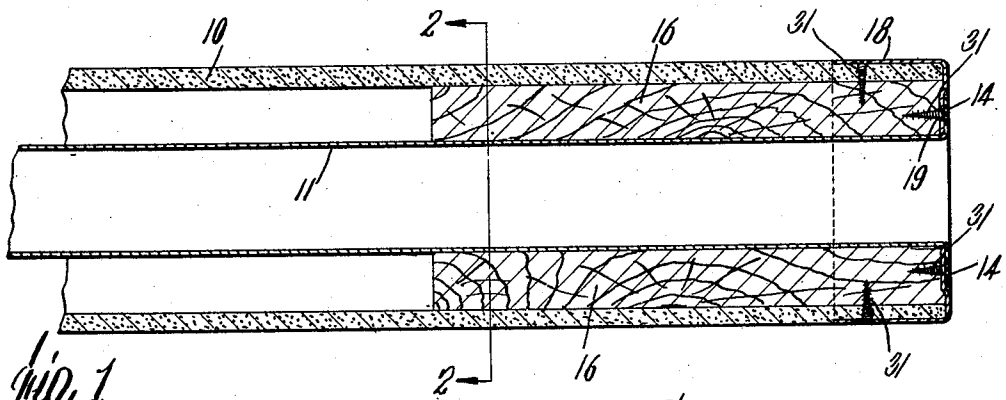

Fig. 1

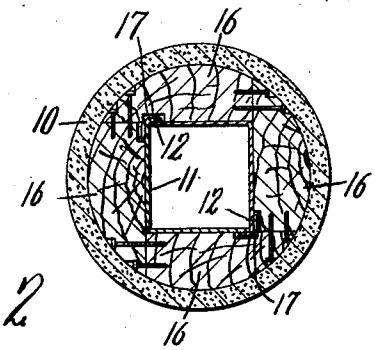

Fig. 2

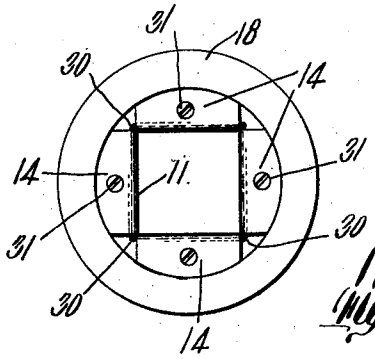

Fig. 3

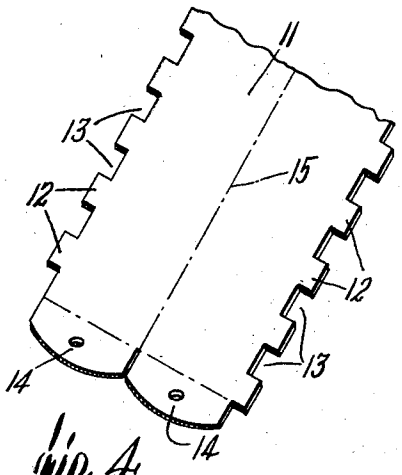

Fig. 4

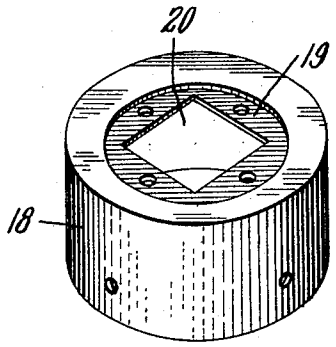

Fig. 5

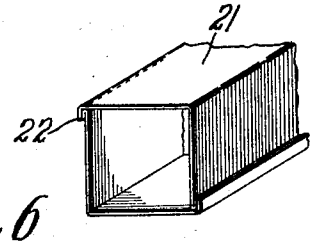

Fig. 6

Inventor:
Howard Parker.
by Wright Brown Quinby & May
Attys.

Patented Oct. 11, 1932

1,881,911

UNITED STATES PATENT OFFICE

HOWARD PARKER, OF BERLIN, NEW HAMPSHIRE, ASSIGNOR TO BROWN COMPANY, OF BERLIN, NEW HAMPSHIRE, A CORPORATION OF MAINE

CORE FOR TEXTILES

Application filed March 28, 1930. Serial No. 439,681.

This invention relates to a core or mandrel suitable for winding up textile materials such as cloth or the like. According to previous practice, textile manufacturers are accustomed to cores of a definite standard size and shape, such cores having a polygonal, commonly square, hollow therethrough to receive a winding shaft or mandrel, a portion of which is correspondingly shaped. According to the present invention a core of standard size and shape is provided, this core being fabricated of various materials by which the core itself is lighter in weight, stronger and cheaper than the ordinary core.

For a more complete understanding of the invention, reference may be had to the description thereof which follows and to the illustration thereof on the drawing, of which,—

Figure 1 represents in section a portion of a core embodying the invention.

Figure 2 is a transverse section on the line 2—2 of Figure 1.

Figure 3 is an end view of the core illustrated in Figure 1.

Figure 4 is a fragmentary perspective view of an element of the interior of the core.

Figure 5 is a perspective view of a metal cap used on the end of the core.

Figure 6 is a fragmentary perspective view of a modified form of inner member for the core.

Referring to the drawing in detail, 10 represents a fibrous tube such as may be made, for example, by winding strips of paper spirally on a mandrel with suitable adhesives between the plies. Or the tube can be made by winding a web of wet pulp upon itself on a mandrel under pressure until the desired wall thickness is obtained. The successive turns of the web are interfelted by pressure applied during the winding so that the resultant tube has a compact wall of interfelted fiber which possesses considerable mechanical strength after being properly dried. Such a tube may be further strengthened by suitable treatment, such as saturation with sulphur, asphalt, or other suitable material. The resulting tube is light but strong and is capable of considerable abuse, since it has tough, strong walls.

According to the invention I may make such a tube having its external diameter equal to the standard diameter of textile cores. A tube of the material described needs only a relatively small wall thickness for the mechanical strength required for such purposes. In order to adapt such a tube for mounting on a square driving shaft, I may contruct a polygonal central member to be carried therein. This member may be formed in any suitable way, as by fastening together a pair of sheet metal blanks 11. As shown in Figure 4, each of the tube blanks may be stamped with lugs 12 and recesses 13 along the longitudinal edges, suitable flaps or ears 14 being provided at the ends for purposes hereinafter explained. The blank illustrated in Figure 4 is bent at right angles on the line of fold indicated at 15, two such members being brought together with the lugs 12 of one extending through the recesses 13 of the other. The lugs 12 may then be bent around the face of the opposite member so as to clinch the two blanks together, as indicated in Figure 2. This structure may be further strengthened, if desired, by spot welding, soldering or otherwise securing the lugs.

In the ends of the tube 10 suitable hollow blocks may be formed, as indicated in Figure 2. Such blocks or bearing members may be conveniently formed of four pieces of wood 16, these pieces being nailed or otherwise secured together so that their outer surface is cylindrical to fit tightly within the end of the tube 10, the inner surface of the wooden bearing member being square to receive the central member formed by the blanks 11. Suitable recesses may be formed in the wooden bearing block 16 to allow room for the lugs 12 of the metal piece.

In assembling the core, the central member may be inserted in the tube 10, then the bearing blocks may be forced into the ends of the tube so as to hold the central metal member suitably centered. If desired, the blocks 16 may be secured in place by an adhesive or by fastening elements driven through the tube wall. After the blocks have been inserted,

I may place a ferrule or cap 18 over the end of the tube, this cap having a skirt of sufficient diameter to fit tightly on the outer wall of the tube 10. As shown in Figure 5, the end of the cap has a central depressed or inwardly offset portion 19 with a square aperture 20 therein. When the cap is placed on the tube, the ears 14 of the central member project through the aperture 20. These may then be bent outwardly to lie against the depressed face 19, as shown in Figure 3, the outer surfaces of the ears being then flush with the end surface of the cap. These parts may then be secured, if desired, by spot welding to strengthen the entire structure, as at 30. Suitable additional fastening elements such as wood screws 31 may be provided to keep the blocks 16 in place. These screws may extend through the end or skirt of the cap 18, or both.

Instead of providing lugs 12 to bend around the edges of the opposite member 11, I may provide a pair of sheet metal members 21, as shown in Figure 6, the edges of these members being bent together as at 22 and secured by spot welding or other equivalent means to form a square central member for the core.

I claim:

1. A core for textiles or the like, comprising a fibrous tube having a relatively thin wall, a tubular sheet metal central member with a substantially square cross-section within said tube and extending from one end to the other thereof, a pair of spacing blocks fitted within the ends of said tube and engaging the inner surface of the tube and an outer surface of the central member, a pair of metal caps on the ends of said tube, each of said caps having a square opening therein registering with the central member, and ears on the ends of the central member passing through said openings and folded outwardly against the outer face of said caps.

2. In combination with a fiber tube and an inner metal tube of square cross-section having ears on the ends thereof, a metal cap fitted tightly over an end of said fiber tube, said cap having a circular portion of its face offset inwardly a distance substantially equal to the thickness of said ears, said cap also having a square aperture in said offset portion registering with said inner tube, said ears extending through said aperture and being bent outwardly against said offset portion so as to lie substantially flush with the remaining portion of the end face of the cap.

In testimony whereof I have affixed my signature.

HOWARD PARKER.