(No Model.) 5 Sheets—Sheet 1.

H. M. WHITNEY.

FLOURING MACHINE.

No. 590,939. Patented Sept. 28, 1897.

Fig. 1.

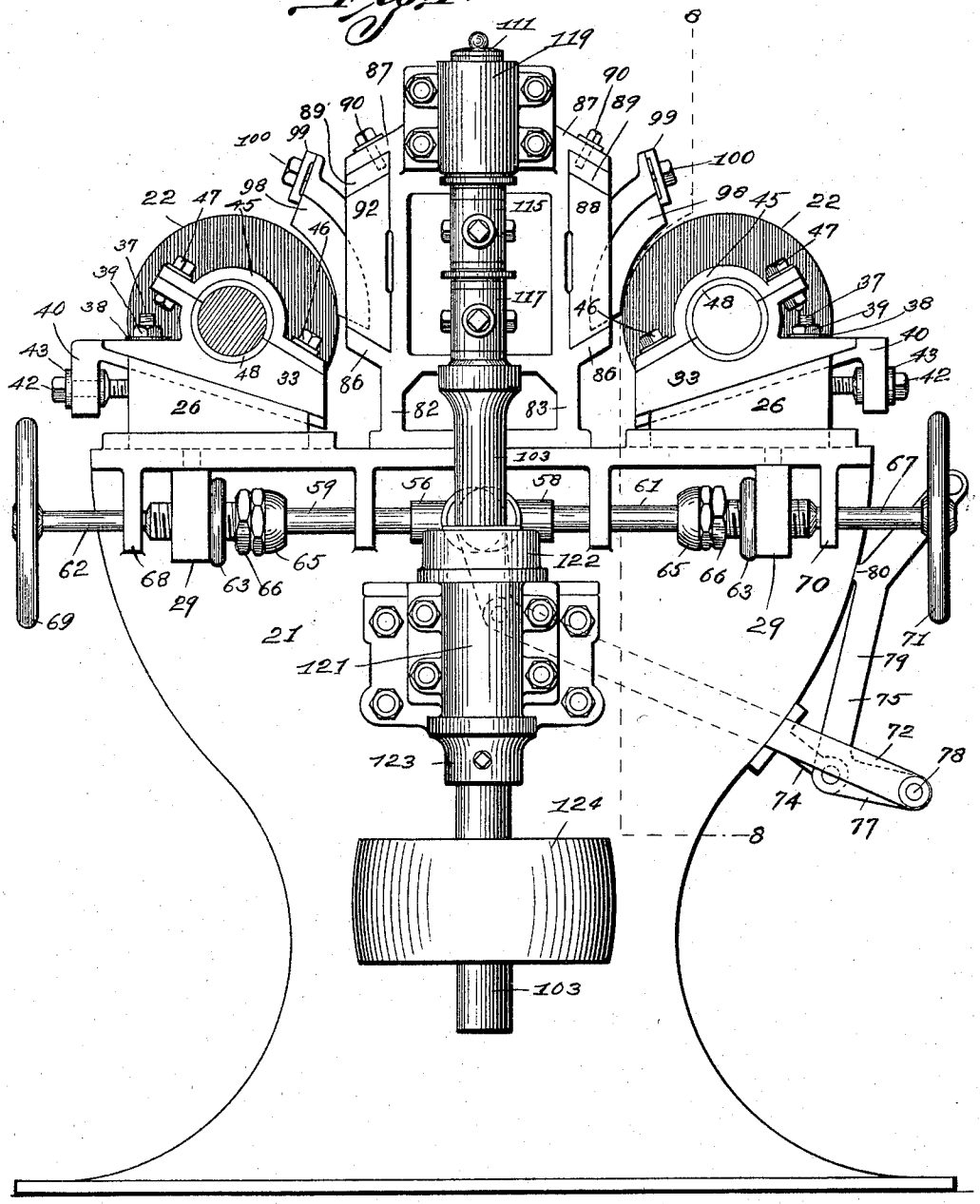

Attest
W. P. Smith
S. G. Wells.

Inventor:-
Hugh M. Whitney:-
By Higdon, Longan & Higdon
Atty's.

THE NORRIS PETERS CO., PHOTO-LITHO., WASHINGTON, D. C.

(No Model.) 5 Sheets—Sheet 2.

H. M. WHITNEY.

FLOURING MACHINE.

No. 590,939. Patented Sept. 28, 1897.

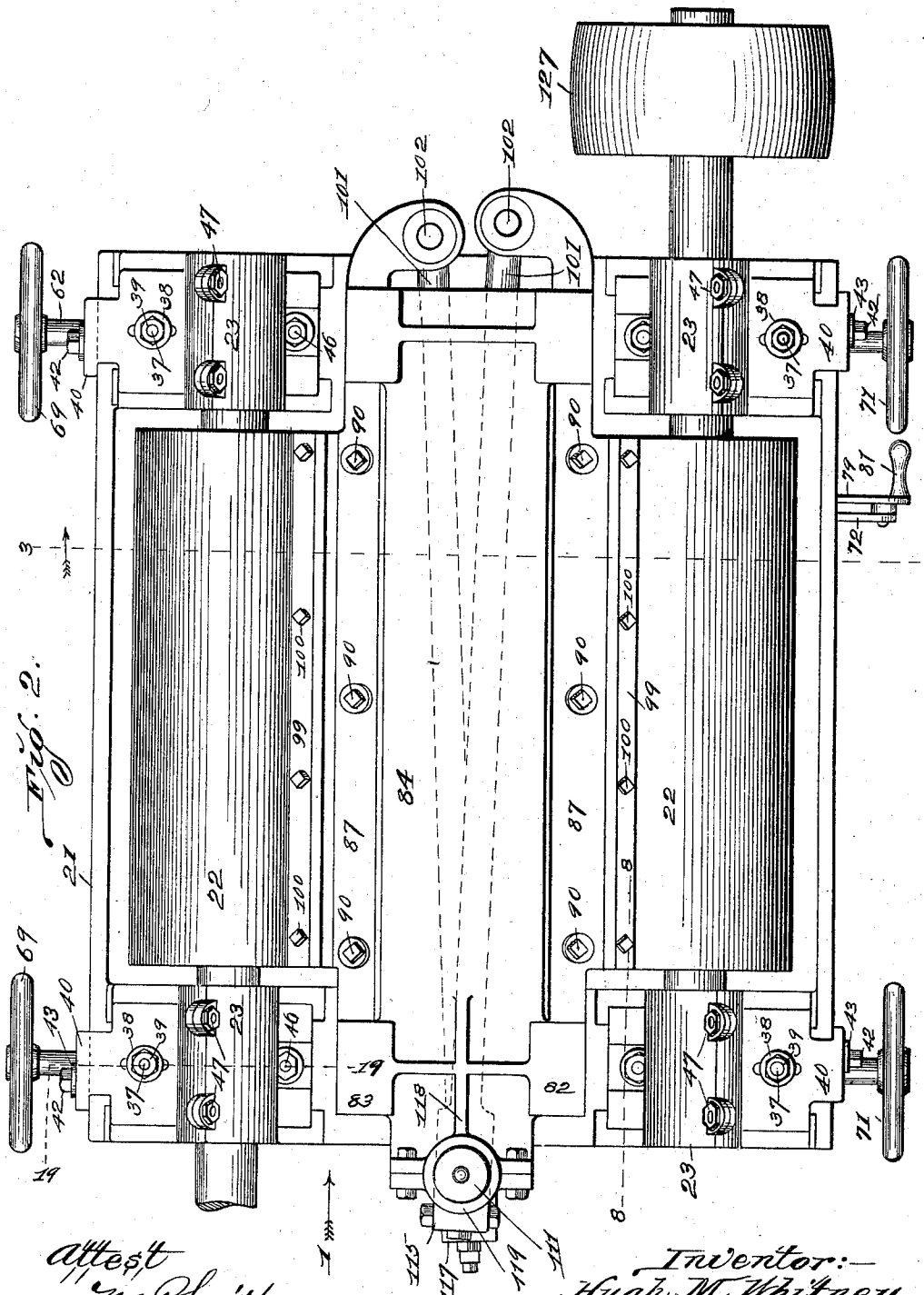

Fig. 2.

Attest
W. P. Smith
S. G. Wells.

Inventor:—
Hugh M. Whitney
By Higdon Lougan & Higdon
Attys

THE NORRIS PETERS CO., PHOTO-LITHO., WASHINGTON, D. C.

(No Model.)

5 Sheets—Sheet 3.

H. M. WHITNEY.

FLOURING MACHINE.

No. 590,939. Patented Sept. 28, 1897.

Fig. 3

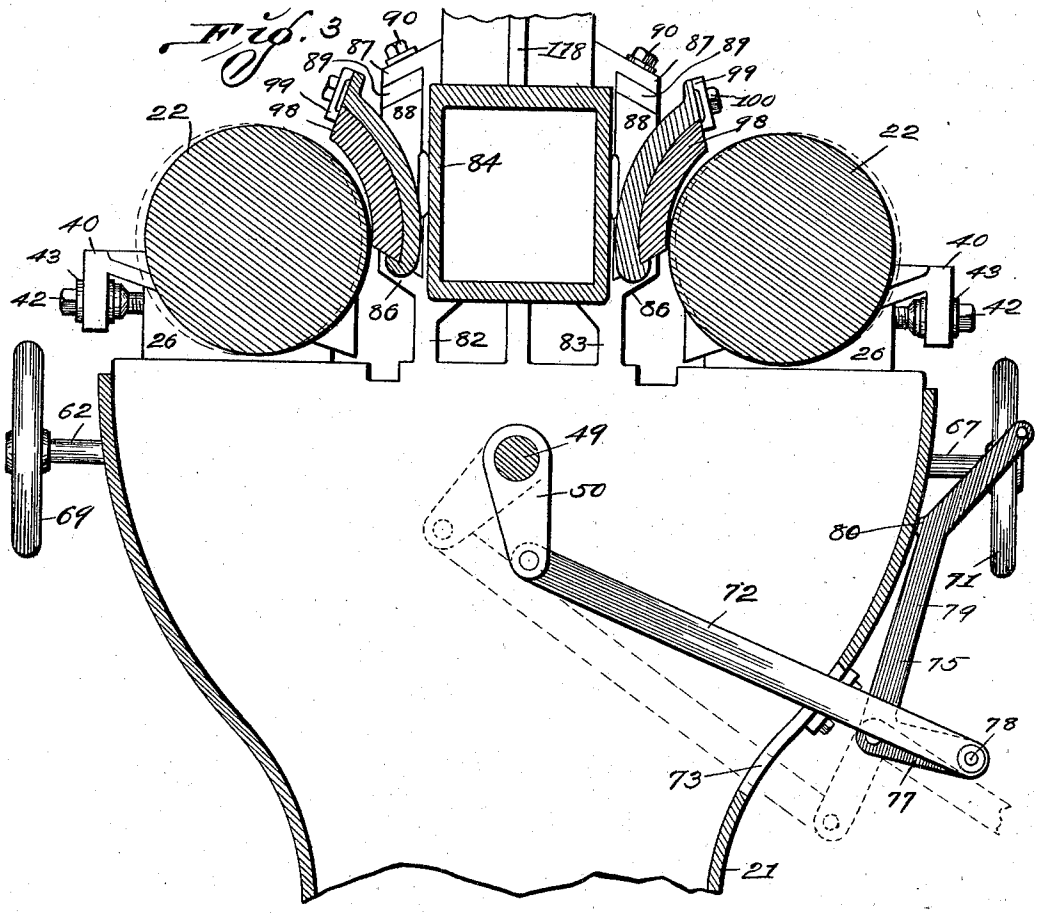

Fig. 4

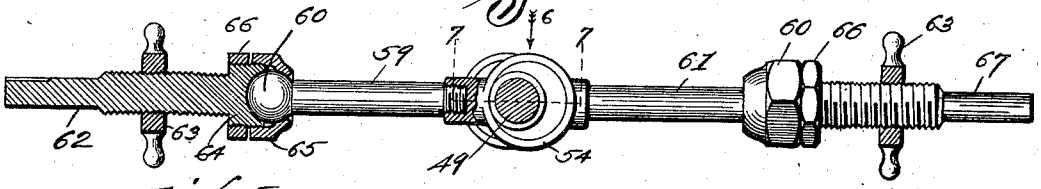

Fig. 5.

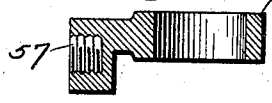

Fig. 6

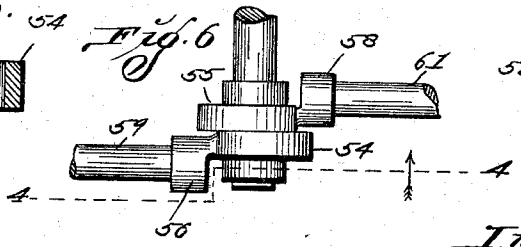

Fig. 7.

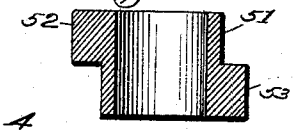

Attest
W. P. Smith,
S. G. Wells.

Inventor:-
Hugh. M. Whitney.
By Higdon, Cougan & Higdon
Attys.

THE NORRIS PETERS CO., PHOTO-LITHO., WASHINGTON, D. C.

(No Model.)

5 Sheets—Sheet 4.

H. M. WHITNEY.

FLOURING MACHINE.

No. 590,939. Patented Sept. 28, 1897.

Fig. 8

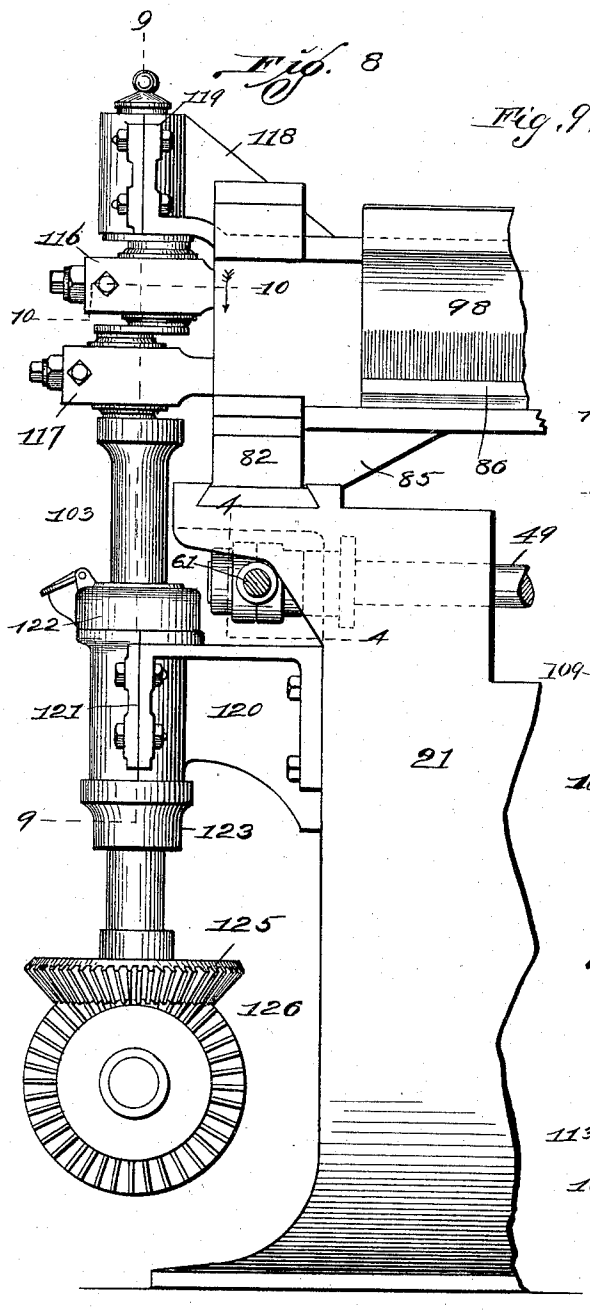

Fig. 9.

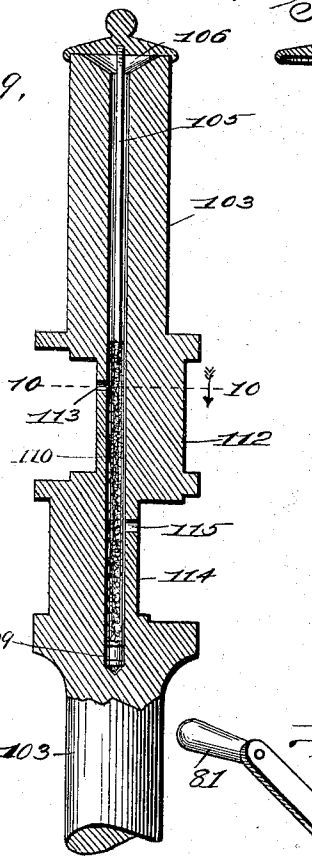

Fig. 11.

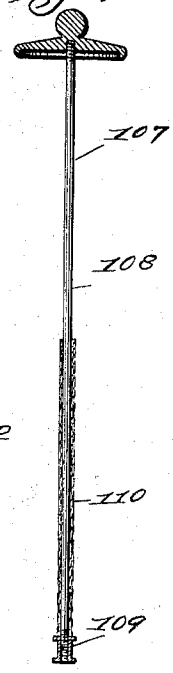

Fig. 12.

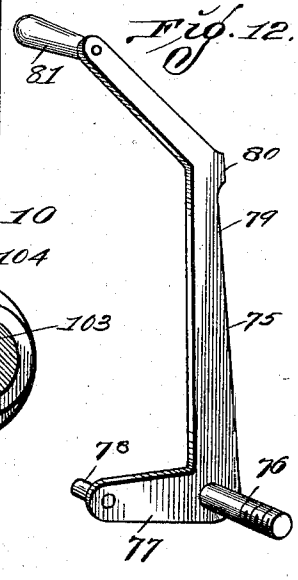

Fig. 10

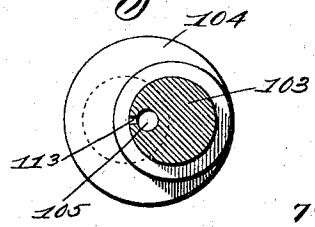

Attest,
M. Smith.
S. G. Wells.

Inventor:—
Hugh M. Whitney.
By Higdon Lougan & Higdon.
Attys.

THE NORRIS PETERS CO., PHOTO-LITHO., WASHINGTON, D. C.

(No Model.) 5 Sheets—Sheet 5.

H. M. WHITNEY.

FLOURING MACHINE.

No. 590,939. Patented Sept. 28, 1897.

Fig. 13

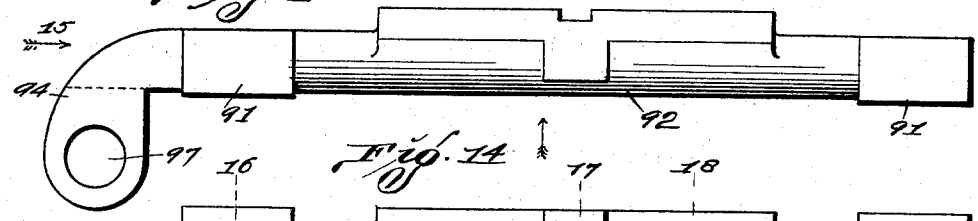

Fig. 14

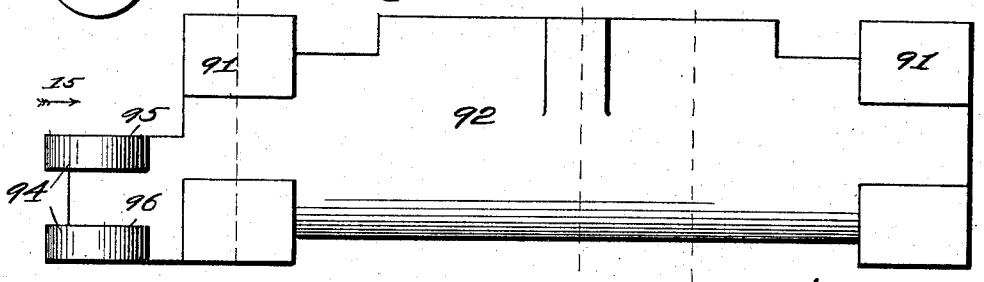

Fig. 15

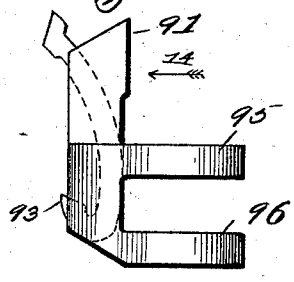

Fig. 16

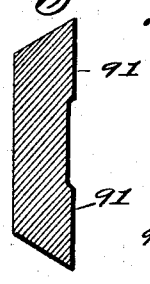

Fig. 17

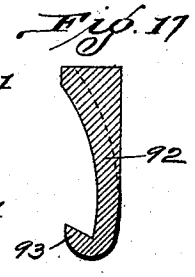

Fig. 18

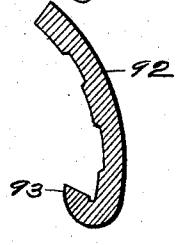

Fig. 19

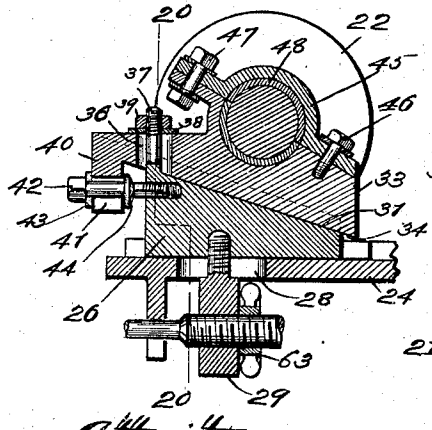

Fig. 20.

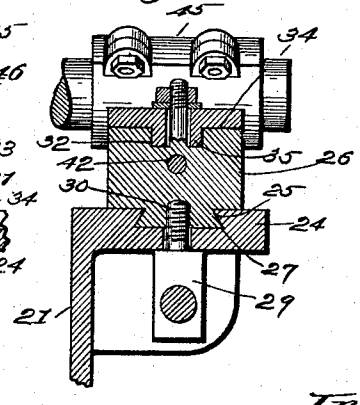

Attest
W. P. Smith
S. G. Wells.

Inventor:-
Hugh M. Whitney:-
By Higdon Lougan & Higdon
Atty's.

THE NORRIS PETERS CO., PHOTO-LITHO., WASHINGTON, D. C.

UNITED STATES PATENT OFFICE.

HUGH M. WHITNEY, OF ST. LOUIS, MISSOURI, ASSIGNOR TO THE WHITNEY MANUFACTURING COMPANY, OF SAME PLACE.

FLOURING-MACHINE.

SPECIFICATION forming part of Letters Patent No. 590,939, dated September 28, 1897.

Application filed January 4, 1897. Serial No. 617,969. (No model.)

To all whom it may concern:

Be it known that I, HUGH M. WHITNEY, of the city of St. Louis, State of Missouri, have invented certain new and useful Improvements in Flouring-Machines, of which the following is a full, clear, and exact description, reference being had to the accompanying drawings, forming a part hereof.

My invention relates to flouring-machines, and especially to machines for hulling and reducing grain preparatory to flour; and it consists in the novel construction, combination, and arrangement of parts, hereinafter shown, described, and claimed.

Figure 1 is a side elevation of my improved flouring-machine and looking in the direction indicated by the arrow 1 in Fig. 2. Fig. 2 is a top plan view of the machine shown in Fig. 1, one of the driving-shafts being broken away to economize space. Fig. 3 is a vertical sectional view taken approximately on the line 3 3 of Fig. 2 and looking in the direction indicated by the arrows. Fig. 4 is a vertical sectional view of the roll-shifting mechanism and taken approximately on the line 4 4 of Figs. 6 and 8, parts being broken away to economize space. Fig. 5 is a horizontal sectional view of one of the rings used in the roll-shifting mechanism and shown in Figs. 4 and 6. Fig. 6 is a top plan view of the parts shown in the central portion of Fig. 4, the shafts being broken away to economize space. Fig. 7 is a horizontal sectional view of the eccentrics which operate the rings shown in Fig. 5, and the view is taken approximately on the line 7 7 of Fig. 4 with the rings and shaft removed. Fig. 8 is a vertical sectional view taken longitudinally of the machine and approximately on the line 8 8 of Fig. 1, the frame being shown in full lines and bevel-gears being substituted for the belt-pulley. Fig. 9 is a vertical sectional view of the crank-shaft and taken approximately on the line 9 9 of Fig. 8, parts being removed. Fig. 10 is a horizontal sectional view through the crank-shaft shown in Fig. 9 and taken approximately on the line 10 10 of Figs. 8 and 9 and looking in the direction indicated by the arrows. Fig. 11 is a view in elevation of the oiling device which I use in connection with the crank-shaft shown in Fig. 9. Fig. 12 is a view in perspective of the bell-crank lever used for operating the roll-shifting mechanism. Fig. 13 is a top plan view of the casting which carries and operates the concave. Fig. 14 is a rear elevation of the casting shown in Fig. 13. Fig. 15 is an end elevation of the casting shown in Figs. 13 and 14 and looking in the direction indicated by the arrow 15. Fig. 16 is a transverse sectional view taken approximately on the line 16 16 of Fig. 14. Fig. 17 is a transverse sectional view taken approximately on the line 17 17 of Fig. 14. Fig. 18 is a transverse sectional view taken approximately on the line 18 18 of Fig. 14. Fig. 19 is a vertical transverse sectional view taken approximately on the line 19 19 of Fig. 2, parts being broken away to economize space. Fig. 20 is a vertical longitudinal sectional view taken approximately on the line 20 20 of Fig. 19.

In the construction of a flouring-machine in accordance with the principles of my invention I employ a hopper-shaped base or frame 21. The grinding-rolls 22 are mounted above the base 21, and the spindles of said rollers operate in the adjustable bearings 23. The bearings 23 are constructed as shown in detail in Figs. 19 and 20. The top plate 24 is formed integral with the base 21, and a dovetailed recess 25 is formed from the upper face of said plate and extending transversely of the machine—that is, transversely of the grinding-rolls. The triangular block 26 rests upon the upper face of the plate 24, and a dovetail 27 extends downwardly from said block 26 and slides in the recess 25, thus forming a sliding connection between the block 26 and the plate 24. An elongated opening 28 is formed through the plate 24 with its lowest dimension in a direction transversely of the machine, and said opening communicates with the recess 25. The block 29 is placed with its upper surface in contact with the lower surface of the plate 24, and the screw-threaded bolt 30 extends upwardly from the center of said block through the opening 28 and is screw-seated in the bottom of the triangular block 26. The bolt 30 forms a stop to limit the motion of the block 26 relative to the plate 24. The upper surface 31 of the triangular block 26 is upon an angle of about

thirty degrees relative to the horizontal, and a recess 32 is formed in said inclined surface 31 at approximately its center and extending longitudinally of said block—that is, transversely of the machine. The bearing-block 33 has an inclined lower face 34, corresponding to the upper face of the block 26, and a lug 35 extends downwardly from said face 34 into the recess 32. In the outer end of the block 33 is formed a vertical opening 36, which opening is elongated transversely of the machine, and a bolt 37 extends upwardly from the outer end of the block 26 through said opening 36, thus forming a stop to limit the motion of the block 33 relative to the block 26. A washer 38 is placed upon the bolt 37 and rests upon the upper face of the block 33, and a nut 39 is screw-seated upon the upper end of said bolt, thus forming means of setting the block 33 in a desired position relative to the block 26 by tightening said nut 39. An arm 40 extends downwardly from the outer end of the block 33, and the lower end of said arm is bifurcated by the slot 41. The bolt 42 has its point screw-seated in a horizontal position in the outer end of the block 26 and in position to operate in the slot 41. A washer 43 is placed upon the bolt 42 and against its head and against the outer face of the arm 40. A collar 44 is rigidly fixed upon the bolt 42 and in such a position that it will engage the inner face of the arm 40 as required to allow said bolt 42 to operate freely in said slot 41. By the manipulation of the bolt 42 the position of the block 33 may be accurately adjusted relative to the block 26.

In the upper face of the block 33 is formed the lower portion of the bearing in which the spindle of the grinding-rollers 22 operate. The cap 45 forms the upper part of said bearing and is secured in position by the bolts 46 and 47. The bushing 48 is placed in the bearing thus formed in the ordinary manner. The shaft 49 is mounted in bearings in the end pieces of the base 21 near the upper sides of said pieces and in position parallel with the grinding-rollers 22. An arm 50 is fixed upon said shaft at a convenient point intermediate of said end pieces.

The double eccentrics 51 (shown in Fig. 7) are mounted one upon each end of the shaft 49 outside of and near to the base. The double eccentric 51 consists of two circular portions 52 and 53, offset relative to each other and formed integral, or, if preferred, said circular portions may be formed independently of each other.

The eccentric-ring 54 (shown in section in Fig. 5) is placed upon the circular portion 53, as shown in Figs. 4 and 6, and a similar ring 55 is placed upon the circular portion 52. A circular arm 56 extends from the ring 54 and has the screw-threaded aperture or recess 57 formed from its outer face. A similar arm 58 is attached to the ring 55. A rod 59 has one of its ends screw-threaded and seated in the arm 56, as shown in Fig. 4, and upon the opposite end of said rod from said arm is a globe-shaped head 60. A similar rod 61, having a similar head, is attached to the arm 58. The rod 62 is screw-threaded upon its inner end and operates horizontally through a screw-threaded aperture in the block 29, as shown in Fig. 19. A hand-wheel 63 is placed upon the screw-threaded portion of the rod 62, inside of the block 29, and operates as a jam-nut against the inner face of said block 29 to hold said rod 62 in a desired position relative to said block. The extreme inner end of the rod 62 has the enlarged screw-threaded portion 64, in the end face of which is a circular concavity to receive approximately one-half of the head 60. The cap 65 is placed upon the rod 59 before said rod is placed in the arm 56, and the opening in said cap is of such a size as will allow the head 60 to pass into said cap, but not through said cap, as shown in Fig. 4, and said cap is interiorly screw-threaded at the large end of its opening and is screw-seated upon the enlarged portion 64 of the rod 62, thus forming a ball-and-socket connection between the rod 62 and the rod 59. The jam-nut 66 is screw-seated upon the portion 64 and against the end of the cap 65, as required to hold said cap adjustably in the desired position. The rod 67 is connected to the head of the rod 61 in a manner similar to that described with reference to the rod 62. A lug 68 extends outwardly from the upper portion of the base 21, and a bearing is formed horizontally through said lug as required to support the outer end of the rod 62 and allow said rod to slide through said lug, and a hand-wheel 69 is fixed upon the outer end of said rod 62 for operating said rod. A lug 70 supports the rod 67 and corresponds to the lug 68, and a hand-wheel 71 is mounted upon the outer end of the rod 67 and corresponds to the hand-wheel 69. By the manipulation of the hand-wheels 69 and 71 the position of the blocks 26 may be accurately adjusted relative to the base 21.

A connecting-rod 72 is attached to the free end of the arm 50 and extends downwardly at an angle of about thirty-five degrees through the opening 73 in the base 21 and to a point some distance outside of said base. A post 74 is attached to the base 21, adjacent the opening 73, and a bell-crank lever 75 (shown in Fig. 12) is pivotally connected to the outer end of said post by means of the pin 76. The lower arm 77 of the bell-crank lever 75 is pivotally connected to the outer end of the connecting-rod 72 by means of the pins 78. The upper arm 79 extends upwardly outside of the base 21, and a lug 80 projects inwardly from said arm to engage the base 21 when said lever is in its locked position, as shown in Fig. 1. Above the lug 80 the arm 79 is bent outwardly, and to its extreme upper end is attached an operating-handle 81.

The parts constituting the roll-shifting mechanism are so adjusted that when the

bell-crank lever is in its locked position, as shown in Fig. 1, the grinding-rolls are in their operative position relative to the concaves. When it is desired for any reason to throw the grinding-rolls away from the concaves, the operator grasps the handle 81 and throws the bell-crank lever downwardly, as indicated by dotted lines in Fig. 3. This operation rotates the shaft 49 and operates the eccentrics carried by said shaft to throw the rods 59 and 61 outwardly, thus sliding the blocks 29 outwardly, and thereby moving the bearings 23 outwardly and moving the grinding-rolls 22 away from the concaves. While each of the bearings 23 is independently adjustable by means of the construction shown in Figs. 19 and 20, all of the bearings operate simultaneously by the operation of the bell-crank lever. The bell-crank lever and its connections are not intended as an adjusting device, but rather as a device for throwing the grinding-rollers into and out of operation.

Extending upwardly from the end pieces of the base 21 are the posts 82 and 83, and a square or rectangular open-ended box 84 extends longitudinally of the machine approximately half-way between the grinding-rolls 22 and is supported by said posts. The posts 82 and 83 extend to points somewhat above the upper side of the box 84. Between the lower ends of the posts 82 and 83 are posts 85, which form strengthening-ribs to support the lower wall of the box 84, as shown in Fig. 8. The posts 82 and 83 are substantially alike, and lugs 86 extend outwardly and upwardly from said posts substantially on a line with the lower side of the box 84. The lugs 87 extend outwardly and downwardly from the upper ends of said posts and in conjunction with the corresponding lugs 86 form dovetailed recesses in which the concave-carriers 88 operate. The blocks 89 are placed against the under surface of the lugs 87 and are held in position by the lag-screws 90. When the blocks 89 are removed from their position, the concave-carriers may be removed from the recesses in which they operate laterally and without the necessity of bringing them out endwise.

The concave-carriers 88 are constructed as shown in Figs. 13 to 18, inclusive, and consist of the end portions 91, which end portions are in the form of a dovetail in cross-section, as shown in Fig. 16, and operate within the dovetailed recesses formed by the lugs 86 and 87. The intermediate portion 92 of the concave-carriers is substantially concaved in cross-section, as shown in Fig. 18, and its lower edge turns outwardly and upwardly, thus forming the hooks 93. Extending from corresponding ends of the concave-carriers are arms 94, which arms are turned toward each other, as shown in Fig. 2, and the free ends of said arms are bifurcated, thus forming the ears 95 and 96, and vertically-alined bearings 97 are formed through said ears. The concaves 98 are placed in position against the concaved outer faces of the concave-carriers, with their lower edges resting upon the hooks 93. The plates 99 are in the form of a channel-bar and are placed in position, with their lower flanges engaging the upper edges of the concaves 98 and their upper flanges engaging the upper edges of the concave-carriers, and said plates are held adjustably in position by means of the lag-screws 100, thus forming clamps to hold the concaves in position relative to the concave-carriers. The pitman-rods 101 are pivotally attached to the concave-carriers by means of the pins 102, passing through the bearings 97 and through the ends of said pitman-rods. The pitman-rods 101 extend through the box 84, as shown in dotted lines in Fig. 2, and the ends of said rods opposite the bearings 97 are formed bearings which engage and are operated by the double-crank shaft 103, as shown in Fig. 9. The double-crank shaft 103 is turned from a straight cylindrical shaft, a cross-section of which is indicated by the circle 104 in Fig. 19. The bore 105 is formed over the upper end of said shaft and at its axial center, and the upper end 106 of said bore is countersunk to form an oil-cup.

The oiling device 107 (shown in Fig. 11) is inserted in the bore 105, and said oiling device consists of the rod 108, which is substantially the same length as the bore 105 and considerably smaller than said bore in diameter. The lower end of the rod 108 is screw-threaded to receive the cap 109, which cap is substantially of such diameter as that it will fit closely within the bore 105, and the lower half of the rod 108 is wound with candle-wicking 110, as shown in dotted lines in Fig. 11, or other absorbent material. After the rod 108 with its attachments is inserted in the bore 105 oil is poured into the cup 106 and allowed to run down around the rod 108 and into the wicking 110. The cap 111 is screw-seated upon the upper end of the rod 108 and covers the upper end of the shaft 103 and closes the oil-cup 106. The shaft 103 is turned down to form the crank 112, which crank is eccentric to the axial center of said shaft, and an opening 113 is formed horizontally in said crank and communicates with the bore 105, thus allowing the oil within the bore 105 to pass outwardly through the opening 113 and keep said crank oiled.

The crank 114 is formed upon the shaft 103 a short distance below the crank 112 and is eccentric to the axial center of the shaft in the opposite direction from the crank 112, and an opening 115 is formed horizontally in said crank and communicates with the bore 105 for the purpose of allowing oil to pass outwardly through said opening 115 and lubricate the crank 114. A split box or bearing 116 is formed in the end of one of the pitman-rods 101 opposite the bearing 97, and said split bearing is placed upon the crank 112. A similar bearing 117 is formed in the end of the other one of the pitman-rods 101 and is placed

upon the crank 114. An arm 118 extends outwardly and upwardly from one end of the box 84, and a vertical bearing 119 is formed at the upper end of said arm. An arm 120 extends outwardly from the base 21, and a vertical bearing 121 is formed in the outer end of said arm in vertical alinement with the bearing 119. The shaft 103 is mounted in the bearings 119 and 121, and a collar 122 is fixed upon said shaft 103 above the bearing 121, and a similar collar 123 is fixed upon said shaft below the bearing 121 to hold said shaft in position and from endwise movement in said bearings. The rotation of the shaft 103 reciprocates the concaves 98 relative to the grinding-rolls 22. The shaft 103 may be driven by the belt-pulley 124, as shown in Fig. 1, or it may be driven by the beveled gears 125 and 126, as shown in Fig. 8, or the pitman-rods 101 may be reciprocated in any suitable manner.

One of the grinding-rolls is driven by the belt-pulley 127, attached to its spindle and outside of the bearings of said roll, and the other one of the grinding-rolls is driven by a similar pulley (not shown) attached at the opposite end of the machine from the pulley shown, as indicated by the lines broken away in Fig. 2.

The operation of my improved machine will be obvious to those familiar with the art and need not be repeated.

I claim—

1. In a grinding-machine, a suitable frame having dovetailed recesses in its sides, concave-carriers slidingly mounted in said dovetailed recesses, concaves detachably connected to and carried by said concave-carriers, pitman-rods attached to corresponding ends of said concave-carriers and extending back of said concave-carriers to the opposite end of the machine, and means of operating said pitman-rods whereby said concave-carriers are reciprocated, substantially as specified.

2. In a grinding-machine, a suitable frame having dovetailed recesses in its sides, concave-carriers slidingly mounted in said dovetailed recesses, concaves detachably connected to and carried by said concave-carriers, pitman-rods attached to corresponding ends of said concave-carriers and extending back of said concave-carriers to the opposite end of the machine, a double-crank shaft mounted in vertical bearings at said opposite end of the machine, to the cranks of which the free ends of said pitman-rods are attached, and means of rotating said crank-shaft, thus operating said pitman-rods and reciprocating said concaves, substantially as specified.

3. In a flouring-machine, grinding-rollers mounted in adjustable bearings whereby said rollers may be adjusted in any desired direction, an eccentric-shaft mounted in a position parallel with said grinding-rollers, connections between said adjustable bearings and said eccentric-shaft, and means of rotating said eccentric-shaft whereby said bearings are operated simultaneously to move said rollers into and out of their operative positions, substantially as specified.

4. In a flouring-machine, grinding-rollers mounted in adjustable bearings whereby said grinding-rollers may be adjusted in any desired direction; each of said bearings consisting of a block mounted to slide in a horizontal position and having an inclined upper face, a second block mounted to slide upon said inclined face and carrying the bearings in which said grinding-rollers operate, an arm projecting downwardly from one end of said second block and having a bifurcated lower end, a bolt operating in said bifurcated lower end and screw-seated in the first-mentioned block, shoulders upon said bolt upon opposite sides of said arm whereby the manipulation of said bolt will slide said second block upon said inclined face, a vertical transversely-elongated aperture formed in said second block, a bolt extending upwardly from the first-mentioned block through said aperture, and a nut upon the upper end of said bolt and engaging said second block whereby said blocks may be locked together in the desired positions relative to each other, substantially as specified.

5. In a flouring-machine, grinding-rollers mounted in adjustable bearings whereby said grinding-rollers may be adjusted in any desired direction; each of said bearings consisting of a block mounted to slide in a horizontal position and having an inclined upper face, a second block mounted to slide upon said inclined face and carrying the bearings in which said grinding-rollers operate, means of sliding said second block upon said inclined face and holding said block in the desired position relative to said first block, a horizontal plate supporting said first-mentioned block, a vertical transversely-elongated aperture through said plate and under said block, a third block slidingly mounted under said plate, a bolt connecting said first-mentioned block with the last-mentioned block and means of sliding said last-mentioned block, substantially as specified.

6. In a flouring-machine, grinding-rollers mounted in adjustable bearings whereby said grinding-rollers may be adjusted in any desired direction; each of said bearings consisting of a block mounted to slide in a horizontal position and having an inclined upper face, a second block mounted to slide upon said inclined face and carrying the bearings in which said grinding-rollers operate, means of sliding said second block upon said inclined face and holding said block in the desired position relative to said first block, a horizontal plate supporting said first-mentioned block, a vertical transversely-elongated aperture through said plate and under said block, a third block slidingly mounted under said plate, a bolt connecting said first-mentioned block with the last-mentioned block, a rod screw-seated in a horizontal po-

sition through said last-mentioned block, means of operating said rod, and means of holding said rod from endwise motion, substantially as specified.

7. In a flouring-machine, the combination with a vertical shaft, having a bore formed through its upper end and openings leading from said bore to the bearing portions of said shaft, of a rod to be inserted in said bore, absorbent packing on said rod, and a cap on the lower end of said rod to hold said packing in position, substantially as specified.

8. In a flouring-machine, grinding-rollers mounted in adjustable bearings whereby said grinding-rollers may be adjusted in any desired direction; each of said bearings consisting of a block mounted to slide in a horizontal position and having an inclined upper face, a second block mounted to slide upon said inclined face and carrying the bearings in which said grinding-rollers operate, means of sliding said second block upon said inclined face and holding said block in the desired position relative to said first block, a horizontal plate supporting said first-mentioned block, a vertical transversely-elongated aperture through said plate and under said block, a third block slidingly mounted under said plate, a bolt connecting said first-mentioned block with the last-mentioned block, a rod screw-seated in a horizontal position through said last-mentioned block; an eccentric-shaft mounted in position parallel with the grinding-rollers, eccentrics mounted upon and carried by said eccentric-shaft, bearings engaging said eccentrics, rods attached to said bearings, ball-and-socket joints connecting said rods with the first-mentioned rods which are screw-seated through said last-mentioned blocks, thus forming connections between said adjustable bearings, and means of rotating said eccentric-shaft whereby said bearings are operated simultaneously to move said rollers into and out of their operative positions, substantially as specified.

In testimony whereof I affix my signature in presence of two witnesses.

HUGH M. WHITNEY.

Witnesses:
EDWARD E. LONGAN,
S. G. WELLS.