OPIC
Office de la propriété intellectuelle du Canada

CIPO
Canadian Intellectual Property Office

(12) (19) (CA) **Demande-Application**

(21) (A1) **2,244,646**
(22) 1998/08/11
(43) 1999/02/15

(72) GRIESHABER, Hans R., CH
(72) STEGMANN, Robert, ZA
(71) GRIESHABER, Hans R., CH
(71) STEGMANN, Robert, ZA

(51) Int.Cl.[6] A61F 9/007
(30) 1997/08/15 (1997 1923/97) CH
(30) 1998/03/10 (1998 0574/98) CH

(54) **METHODE ET DISPOSITIF VISANT A AMELIORER LE DRAINAGE DE L'HUMEUR AQUEUSE DANS UN OEIL**

(54) **METHOD AND DEVICE TO IMPROVE AQUEOUS HUMOR DRAINAGE IN AN EYE**

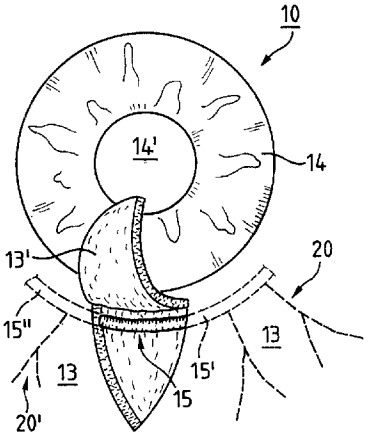

(57) Méthode visant à améliorer le drainage de l'humeur aqueuse dans un oeil par le canal de Schlemm. Selon cette méthode, l'humeur aqueuse sécrétée par le corps ciliaire est drainée dans les voies d'évacuation subséquentes vers un dispositif, afin de poursuivre le drainage. En injectant une substance, sous forme d'un liquide hydrophile ou d'une substance gazeuse biocompatible ou encore un mélange des deux, dans le canal de Schlemm exposé microchirurgicalement à un ou plusieurs endroits, le canal de Schlemm est élargi localement par la pression hydraulique accrue. Au moyen d'un élément de support implanté subséquemment dans la lumière du canal de Schlemm, les parois internes du canal sont supportées et tenues de façon permanente dans une position élargie. On peut ainsi assurer un drainage non-entravé de l'humeur aqueuse du canal de Schlemm par les voies d'évacuation subséquentes.

(57) The present invention relates to a method to improve aqueous humor drainage in an eye with a canal of Schlemm in which eye the aqueous humor secreted by the ciliary body is drained through the subsequent outflow pathways and to a device to maintain aqueous humor drainage. By means of a medium injected in the form of a hydrophilic liquid or a biocompatible gaseous medium or a mixture of the hydrophilic liquid and the gaseous medium into the canal of Schlemm microsurgically exposed at one or more locations, the canal of Schlemm is locally expanded by means of the increased hydraulic pressure. With a support element subsequently implanted in the lumen of the canal of Schlemm, the inner walls of this canal are supported and permanently held in an expanded position, whereby unimpeded drainage of the aqueous humor from the canal of Schlemm through the subsequent outflow pathways is ensured.

ABSTRACT

The present invention relates to a method to improve aqueous humor drainage in an eye with a canal of Schlemm in which eye the aqueous humor secreted by the ciliary body is drained through the subsequent outflow pathways and to a device to maintain aqueous humor drainage.

By means of a medium injected in the form of a hydrophilic liquid or a biocompatible gaseous medium or a mixture of the hydrophilic liquid and the gaseous medium into the canal of Schlemm microsurgically exposed at one or more locations, the canal of Schlemm is locally expanded by means of the increased hydraulic pressure. With a support element subsequently implanted in the lumen of the canal of Schlemm, the inner walls of this canal are supported and permanently held in an expanded position, whereby unimpeded drainage of the aqueous humor from the canal of Schlemm through the subsequent outflow pathways is ensured.

FIELD OF THE INVENTION

The present invention relates to a method and to a device to improve aqueous humor drainage in an eye, by which the aqueous humor secreted by the ciliary body is drained in the region of the iridocorneal angle through the trabecular mesh-work into the canal of Schlemm and from there through the subsequent natural outflow pathways.

BACKGROUND OF THE INVENTION

For treatment of changes in the trabecular meshwork in front of the canal of Schlemm, which changes completely or only partially obstruct the drainage of the aqueous humor, a method and a device for performance of the method are known from printed publication US-A 5,360,399 and US-A 5,486,165, whereby a medium in the form of a highly viscous aqueous solution, preferably based on hyaluronic acid is injected by an injection apparatus into the canal of Schlemm through a probe introduced into the canal of Schlemm, so that the trabecular meshwork is hydraulically expanded and its pores are opened, whereby the openings thus created are coated by the highly viscous material as a protection against immediate reclosure.

Although in the aforementioned printed publications, the injection of a suitable medium into the canal of Schlemm is described as a means for opening thereof, with the known method there is still the uncertainty that ultimately the canal of Schlemm will close again as a result of various

pathological changes. The drainage of the aqueous humor through the canal of Schlemm and through the subsequent outflow pathways is thus significantly restricted or completely obstructed as a result of the deformation of the canal of Schlemm.

The object of the present invention is to provide a method and device by means of which improved, pressure-regulating circulation of the aqueous humor is achieved and its drainage from the eye is permanently maintained.

With regard to the method, the object is characterized in that the canal of Schlemm, microsurgically exposed at one or more locations, is expanded in a first phase by a locally increased hydraulic pressure and then, in a second phase, for example, is supported by appropriate means implanted in the expanded lumen of the canal of Schlemm and thus permanently held in an expanded position.

The object established with regard to the device is characterized in that an axially oriented support element supporting the inner wall of the canal of Schlemm in the region of the locally expanded lumen and is placed such that the aqueous humor can permanently drain from the canal of Schlemm through the subsequent natural outflow pathways of the eye.

Additional advantages, characteristics, and particulars of the invention are revealed in the dependent claims, the following description, and the drawing.

Exemplary embodiments of the invention are described hereinafter with reference to the drawing.

IN THE DRAWINGS

Fig.1 shows a cross section of the anterior section of the eye depicted schematically in a vertical plane;

Fig.2 shows a portion of the eye depicted schematically with a scleral lamella dissected and folded upward and an exposed portion of the canal of Schlemm;

Fig.3 shows an enlarged, schematically depicted portion of the eye according to Fig.2 with an injection probe inserted into the partially exposed canal of Schlemm to expand the canal;

Fig.4 shows the portion of the eye according to Fig. 3 with a support element implanted in one portion of the canal of Schlemm in the form of a cylindrical prosthesis;

Fig.5 shows the support element according to the first exemplary embodiment shown in Fig.4, depicted spatially and enlarged;

Fig.6 shows the support element according to Fig.5, perspectively and partially cross-sectionally;

Fig.7 shows the portion of the eye according to Fig.3 with a support element implanted in the other portion of the canal of Schlemm and designed as a second exemplary embodiment;

Fig.8 shows the support element according to Fig.7 depicted as the second exemplary embodiment, enlarged and in partial cross section;

Fig.9 shows a third exemplary embodiment of the support element to be implanted in the canal of Schlemm;

Fig.10 shows the support element according to Fig.9 depicted in a side view along the line X-X and in cross section;

Fig.11 shows a fourth exemplary embodiment of the support element to be implanted in the canal of Schlemm; and

Fig.12 shows a further exemplary embodiment of the support element to be implanted in the canal of Schlemm.

DESCRIPTION OF THE SPECIFIC EMBODIMENT

Fig.1 shows an enlarged schematic vertical section through the anterior part of the eye labeled in its totality with 10. Evident in the anterior part of the eye are the cornea 11, the iris 12 with the sphincter muscle 12' and 12", the sclera 13, the lens 14 with the pupil 14', and the zonular fibers 19 as well as the canal of Schlemm 15 (sinus venosus sclerae) and the trabecular meshwork 18 (trabeculum corneosclerale) upstream thereto.

In a healthy eye, the drainage of the aqueous humor, which is constantly renewed and circulates according to arrows 1,1' and 2,2' from the posterior chamber H to the anterior chamber V, occurs in the iridocorneal angle V' (angulus iridocornealis) following arrow direction 3 through the trabecular mesh-work 18 into the canal of Schlemm 15 and from there through the collector channels 21',22' (Fig.4) or 21,22 (Fig.7) of the subsequent natural outflow pathways 20,20' (Fig.2,4,7) into the vein system (not shown). The resistance of the drainage system regulates the flow of the aqueous humor so that the pressure in the eye remains in a specific range tolerated by the tissue of the eye.

Under pathological conditions, the resistance may increase, whereby one of the factors is in the canal of Schlemm. The canal of Schlemm 15 may close such that the drainage of the aqueous humor is inhibited or completely blocked. As a result of the elevated resistance, the pressure increases inside the eye so that the blood supply and consequently the function of the optic nerve is restricted. This disorder, generally known as "glaucoma", often leads to the blindness of one or both eyes.

Fig.2 depicts the eye 10 schematically and shows the lens 14 with the pupil 14', the partially depicted sclera 13, and the partially depicted canal of Schlemm 15 and a portion of the natural collector channel system 20,20'

connected therewith (aqueous humor canal system). For the surgical intervention, in a first phase, as depicted schematically in Fig.2, the sclera 13 is microsurgically incised and a lamellar flap 13' is formed which is folded upward for partial exposure of the canal of Schlemm 15. During the course of the surgery, the flap portion 13' of the sclera is held in this position by means, such as clamps or the like, which are not depicted.

In a second phase, as depicted schematically in Fig.3, a probe 33, tubular in design and disposed on a schematically depicted connector 32, is introduced into the lumen 16 of the canal of Schlemm 15. The connector 32 is linked with a schematically depicted injection apparatus 30 through a supply line (not shown). A hydrophilic material, for example a hydrophilic liquid 29, is injected into the canal of Schlemm 15 by means of the injection apparatus 30 following the arrow direction 31 through the tubular probe 33 provided on the distal end with one or more outflow openings 33'. With the injected hydrophilic liquid 29, the virtually closed portion 15' of the canal of Schlemm 15 depicted schematically in Fig.3 is hydraulically expanded.

As an improvement or supplement to the method, the portion 15" of the canal of Schlemm 15 opposite the portion 15' already treated may (in a manner not shown in detail) be treated analogously and expanded using a probe designed preferably as a mirror image and introduced into the canal of

Schlemm 15. Fig.3 also depicts the trabecular meshwork 18 (trabecula) upstream from the canal of Schlemm 15 with the schematically depicted trabecular mesh 18'.

At the time of the above described expansion of the canal of Schlemm 15, openings (not depicted) created in its wall are simultaneously coated with the hydrophilic material injected, for example, such that the hydrophilic liquid 29 clinging to the walls of these openings in the form of a film prevents local contact between the rims of these openings which hinders the discharge of the aqueous humor.

At this point, reference is made to the fact that instead of the hydrophilic material or liquid, an appropriate biocompatible gaseous medium or even a mixture of the hydrophilic liquid and the gaseous medium may be used to expand the canal of Schlemm.

As depicted schematically in Fig.4, an implant supporting the inner wall 16' connected to the hydraulic or pneumatic expansion and to optimize permanent passability and circulation of the aqueous humor is used in one portion 15" of the canal of Schlemm 15. As the first exemplary embodiment of an implant, a support element 35 with a long tube 36, which is inserted with its distal end 35" into the canal of Schlemm 15, is provided. On the

other, promixal end 35', the support element 35 is provided in the exemplary embodiment depicted with a collar 37 which fits closely against the inward face 13" of scleral incision, whereby any displacement of the emplaced (implanted) support element 35 in the canal of Schlemm 15 is prevented. The tube 36 is further provided with a number of throughholes 38,38' distributed axially and circumferentially spaced. The support element 35 is, as depicted schematically in Fig.4, preferably positioned and implanted in the portion 15" of the canal of Schlemm 15 such that at least one of the throughholes 38,38' connects with the small collector channels 21',22' of the natural outflow pathways 20'.

The pipe 36 of the support element 35 is shown spatially in Fig.5 and in perspective and in partial cross section in Fig.6 and the distributed throughholes 38,38' connected with the interior 36' and the essentially torus-shaped collar 37. In the exemplary embodiment depicted, the circular collar 37 is, for example, placed on the tube 36 with a torus-shaped transition 37', formed with a (bell-shaped) flair on it, for example, by suitable means in the form of a mandrel (not shown). In another exemplary embodiment (not shown), there is also the possibility, for improved insertion of the support element 35 into the canal of Schlemm 15, to design the tube 36 conically tapered axially starting from the collar 37 or from the transition 37' to the distal end 35".

Fig. 7 shows the other portion 15' of the canal of Schlemm 15 with the support element 40 designed and implanted as a second exemplary embodiment. The support element 40 is preferably positioned and implanted such that at least one of the outflow openings 41,41', as depicted schematically in Fig.7, is connected with the collector channels 21,22 (small channels) of the natural outflow pathways 20. The aqueous humor penetrating through the trabecular meshwork 18 exits through the canal of Schlemm 15 or through the interior 40' of the support element 40 and through the openings 41' and collector channels 21,22 of the subsequent natural outflow pathways 20.

Fig.8 shows perspectively and partially cross-sectionally the second exemplary embodiment depicted of the tubular support element 40. The second support element 40 is provided with multiple outflow openings 41,41' spaced at intervals axially and arbitrarily distributed circumferentially or placed diametrically opposite each other and connected with the interior 40'.

Fig.9 and Fig.10 depict a third exemplary embodiment of the support element 45 which has two end portions 47,47', each provided with one opening 45',45" and designed as axially spaced toruses, between which are placed at least two, but preferably three webs 46,46' and 46" placed circumferentially

at intervals and linking the end portions 47,47' to each other. In this variant, the recesses 48,48' and 48" provided between the webs 46,46' and 46" serve in each case as outflow openings for the aqueous humor to be drained substantially through the openings 45' and 45".

Fig.11 depicts, as a fourth exemplary embodiment, the support element 50, which is designed essentially as a helicoidal network made of threads 51 designed interlinked and advantageously stiff. The network may, for example, be produced from relatively stiff plastic or metal threads 51 or from a biological material. The individual threads 51 (filaments) of the network may also be interconnectedly wound counter to each other and in a helix shape. In this variant, the gaps 52,52' and 52" provided between the individual threads 51 serve respectively as outflow openings for the aqueous humor. The support element 50 may be designed such that it may be compressed for implantation and automatically expanded in the lumen 16 of the canal of Schlemm 15 after implantation.

The interconnected metal threads or filaments 51 of the support element 50 (Fig.11) are preferably made of a nickel-titanium alloy. These filaments 51 have a so-called shape memory effect, as a result of which the support element 50 designed as a network can be plastically deformed and with appropriate heating can be automatically returned to its original shape. The support element 50 with the thermal shape memory has the advantage that it

can, for example, be inserted plastically deformed with a relatively small external diameter into the exposed canal of Schlemm at normal human body temperature and then, because of the normal body temperature is returned to its original form or shape.

Fig.12 depicts, as another exemplary embodiment, the support element 55, which is, for example, produced from a single wire 56 wound in a helix shape produced from relatively stiff plastic or metal threads 56 or made of a noble metal, for example, a silver, gold, or platinum wire. In this variant, the gaps 57 and 57' provided between the individual turns serve respectively as outflow openings for the aqueous humor.

The support elements 35;40;45;50 or 55 designed, for example, as tubes or spirals made of suitable biocompatible material enable, in particular, due to their inherent flexibility, optimal adaptation to the natural shape of the canal of Schlemm 15. The hollow cylindrical support elements 35;40;45;50 or 55 may, however, be coated with a suitable material, whereby desired biological reactions are generated or adverse biological reactions are reduced or completely prevented with the coating material.

In a variant embodiment not depicted, there is also the possibility that the support element 35;40;45;50 or 55 is designed longitudinally somewhat arcuate. In another variant not depicted, there is also the possibility that the

support element 35;40;45;50;55 is designed conically tapering longitudinally from one end to the other.

To illustrate the dimensions of the individual support elements 35;40;45;50 or 55 and the difficult manipulation thereof during implantation in the expanded lumen 16 of the canal of Schlemm 15 (Fig.4,7), reference is made at this point to the fact that the support elements have, for example, a length L = 2.0 mm and an external diameter D = 0.2 mm. The outflow openings 38,38' or 41,41' placed axially and at intervals circumferentially according to Fig.5,6 and 8 have an inner open diameter d = 0.18 mm. The support elements 35;40;45;50 and 55 are, however, not restricted to the dimensions indicated above as examples.

Exemplary embodiments for introduction of the respective support elements:

Variant I: after expansion, the injection apparatus 30 with the probe 33 is withdrawn from the canal of Schlemm 15 and then the support element 35;40;45;50 or 55 is manually inserted into the lumen 16 of the canal of Schlemm 15 by appropriate means in the form of medical forceps or tweezers or another surgical instrument and positioned (Fig.4,7);

Variant II: the support element 35;40;45;50 or 55 is placed by means of a

separable connection on the distal end of the probe 33 of the injection apparatus 30 and after the expansion of the canal of Schlemm 15, is separated for the implantation by means not depicted;

Variant III: the distal end of the probe 33 of the injection apparatus 30 is designed as a separable support element 35; 40;45;50 or 55;

Variant IV: the substantially hollow cylindrical support element 35;40;45;50 or 55 is pushed onto the distal end of the probe 33 such that after the expansion of the canal of Schlemm 15, the support element 35;40;45;50 or 55 is pushed by suitable means in a axial direction relative to the probe 33 into the lumen 16 of the canal of Schlemm 15 and positioned.

Additional advantageous variants within the framework of the invention are also possible for implantation of the support element 35;40;45;50 or 55 in the lumen 16 of the canal of Schlemm 15.

The invention is not restricted to the above described exemplary embodiments of the individual support elements 35;40; 45;50 or 55. Other advantageous designs of the support elements are also possible without going outside the basic idea of the invention. The support elements described in detail above and depicted are frequently also called endoprostheses. The

combination of the hydraulic expansion and the opening of the essentially closed canal of Schlemm 15 depicted schematically in Fig.3 with the subsequent implantation of the appropriately designed support element 35;40;45;50 or 55, in particular of the flexibly designed support element, is considered particularly advantageous.

With the support element 35 or 40, the lumen 16 of the canal of Schlemm 15 is permanently held open, whereby the support element 35 or 40 is, for example, positioned such that at least one of the outflow openings 38,38' or 41,41', as depicted schematically in Fig. 4 and Fig. 7, is connected with the collector channels 21',22' or 21,22 of the subsequent natural outflow pathways 20' or 20. The aqueous humor penetrating into the trabecular meshwork 18 exits via the canal of Schlemm 15 or via the lumen 36' or 40' of the support element 35 or 40 and via the openings 38' or 41' and collector channels 21',22' or 21,22 of the subsequent natural outflow pathways 20' or 20.

Reference is made to the fact that in the lumen 16 of the canal of Schlemm 15 at least one axially oriented support element 35;40;45;50;55 supportingly contacting the inner wall 16' of the canal of Schlemm 15 is implanted. If need be, there is also the possibility that two or more support elements are implanted in the deformed or obstructed canal of Schlemm 15. Here, it is advantageous if the respective implanted support element ensures a

connection of the canal of Schlemm 15 with at least one collector channel 21,22 or 21',22' of the subsequent natural outflow pathways 20 or 20'.

The embodiments of the invention in which an exclusive property or privilege is claimed are defined as follows:

1. A method to improve aqueous humor drainage in an eye, by which the aqueous humor secreted by the ciliary body is drained in the region of the iridocorneal angle through the trabecular meshwork in the canal of Schlemm and from there through the subsequent natural outflow pathways, **characterized in that** the canal of Schlemm, microsurgically exposed at one or more locations, is expanded in a first phase by a localized increased hydraulic pressure and then, in a second phase, for example, is supported by appropriate means implanted in the expanded lumen and is thus permanently held in an expanded position.

2. The method according to Claim 1, **characterized in that** the exposed canal of Schlemm is expanded with a hydrophilic liquid injected into the lumen thereof.

3. The method according to Claim 1, **characterized in that** the exposed canal of Schlemm is expanded with a gaseous, biocompatible medium injected into the lumen thereof.

4. The method according to Claims 2 and 3, **characterized in that** the exposed canal of Schlemm is expanded with a mixture of the hydrophilic liquid and the gaseous medium injected into the lumen thereof.

5. The method according to Claim 1, **characterized in that** at least one axially oriented support element permanently supporting the inside wall of the canal of Schlemm is implanted in the expanded portion thereof.

6. The method according to Claims 1 and 5, **characterized in that** the support element inserted with its distal end into the expanded portion of the canal of Schlemm is held tightly against the inside wall of the incision by means disposed on the proximal end thereof.

7. The method according to Claims 1 and 5, **characterized in that** a support element which can be plastically deformed at least in its external diameter and which can return to its original shape because of thermal shape memory is implanted in the expanded portion of the canal of Schlemm.

8. The method according to Claim 7, **characterized in that** the support element is plastically deformed under normal human body temperature and after implantation is returned to its original shape as a result of body temperature and shape memory.

9. The method according to Claims 1 and 5, **characterized in that** the canal of Schlemm is expanded in at least two portions positioned at intervals circumferentially spaced from each other, into which in each case the support element is implanted.

10. The method according to Claims 1,5 and 9, **characterized in that** the support element with outflow openings or the like distributed thereon and connected with the lumen thereof is implanted in the canal of Schlemm connected with the subsequent natural outflow pathways.

11. The method according to Claims 1 through 10, **characterized in that** on each of the two sides of the microsurgically exposed and expanded portion of the canal of Schlemm, one support element is implanted.

12. A device to perform the method according to Claim 1, in which the canal of Schlemm exposed in at least one place is expanded by means of a medium injected by an injection apparatus, **characterized in that** in the region of the locally expanded portion of the canal of Schlemm a support element supporting the inside wall and axially oriented thereto is introduced and placed such that the aqueous humor can permanently drain from the canal of Schlemm through the subsequent outflow pathways of the eye.

13. The device according to Claim 12, **characterized in that** the support element designed as a long tube is provided on the proximal end opposite the distal end with a contact collar designed flaring conically outward, preferably with a contact collar formed on it.

14. The device according to Claim 12, **characterized in that** analogously to the lumen (16) of the canal of Schlemm, the support element is designed axially somewhat arcuate or can be automatically deformed into an arcuate shape.

15. The device according to Claim 12, **characterized in that** the support element is designed conically tapering longitudinally from the proximal end to the other, distal end.

16. The device according to Claim 12, **characterized in that** the tubular support element is provided with multiple outflow openings circumferentially and longitudinally distributed at intervals and connecting with the inside.

17. The device according to Claim 12, **characterized in that** the support element has two torus-shaped end portions axially spaced and provided with outflow openings, between which at least two, but preferably three webs are disposed circumferentially at intervals.

18. The device according to Claim 12, **characterized in that** the support element is designed from interlinked threads as a hollow cylindrical network provided with outflow openings.

19. The device according to Claim 18, **characterized in that** the network of the support element is plastically deformable and can be returned to its original shape by warming up.

20. The device according to Claims 18 and 19, **characterized in that** the threads of the network are manufactured from a nickel-titanium alloy with thermal shape memory.

21. The device according to Claims 18 and 19, **characterized in that** the threads of the network are manufactured from a plastic with thermal shape memory.

22. The device according to Claims 18 through 21, **characterized in that** the support element is designed from threads wound individually or counter to each other as a hollow cylindrical network.

23. The device according to one of Claims 18 through 21, **characterized in**

that the threads of the support element are bound to each other in a helicoidal network.

24. The device according to Claim 18, **characterized in that** the support element designed as a hollow cylindrical network is designed to expand automatically.

25. The device according to Claim 18, **characterized in that** the net-shaped support element is produced from a plurality of metal wires wound together.

26. The device according to Claim 12, **characterized in that** the support element is manufactured in the form of a coil spring made from a single wire wound in a helix.

27. The device according to Claim 12, **characterized in that** the hollow cylindrical element is made of a biocompatible material, for example, of a suitable plastic, of stainless steel, of a noble metal, such as silver, gold, or platinum, or of a biological material.

28. The device according to Claim 12, **characterized in that** the hollow cylindrical support element is coated with suitable material to generate a desired biological reaction or to prevent an adverse biological reaction.

29. The device according to Claims 12, **characterized in that** the hollow cylindrical element is flexibly designed for automatic adaptation to the lumen of the canal of Schlemm in the direction of the theoretical longitudinal axis.

30. The device according to Claim 12, **characterized in that** the hollow cylindrical element is disposed by means of a separable connection on the injection apparatus.

31. The device according to Claim 12, **characterized in that** the injection apparatus is provided with a probe which is designed as a separable support element to be implanted in the lumen of the canal of Schlemm.

32. The device according to Claims 12 and 31, **characterized in that** the hollow cylindrical support element is pushed onto the probe of the injection apparatus and can be emplaced by an axial movement of the probe relative to the support element or postionally stable into the expanded portion of the canal of Schlemm.

FIG. 1

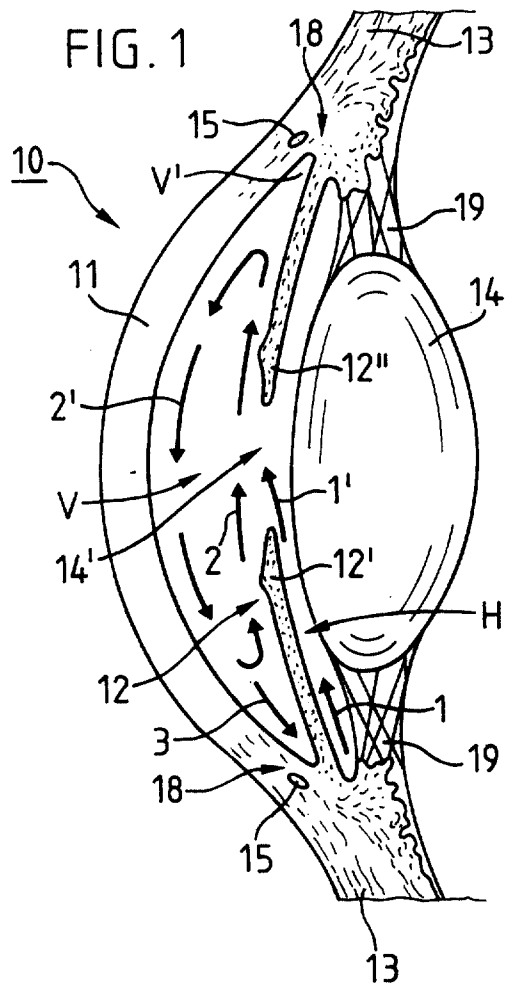

FIG. 2

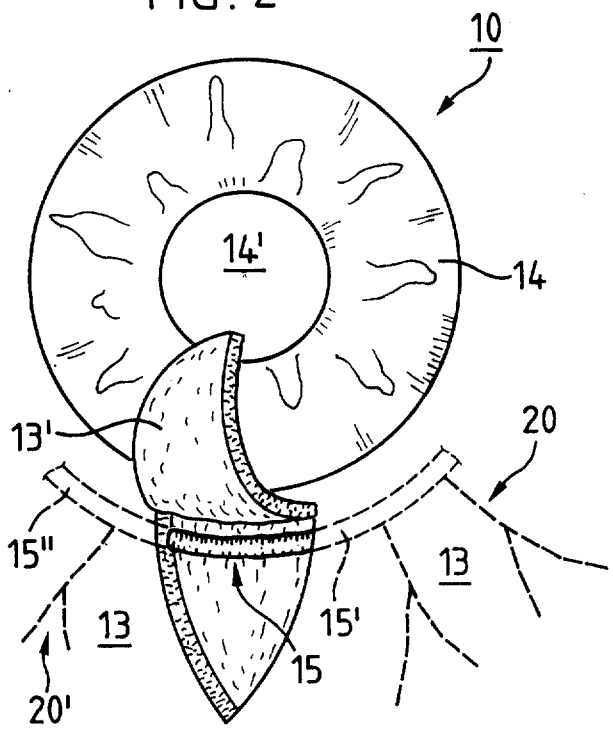

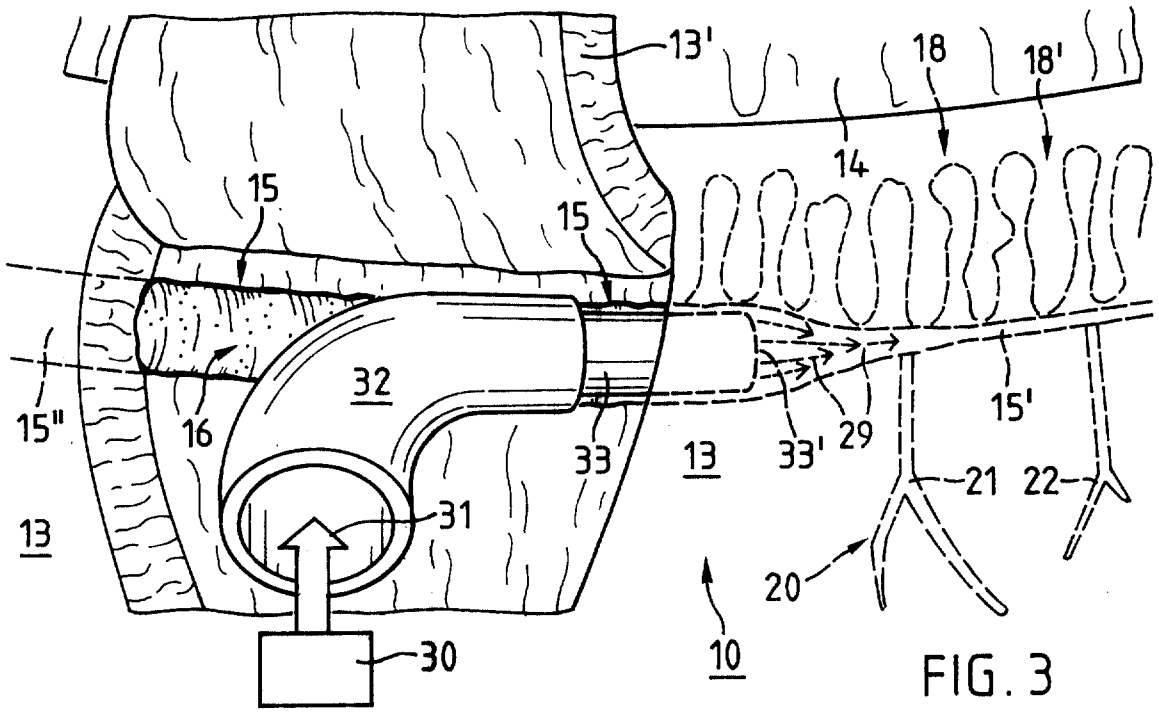

FIG. 3

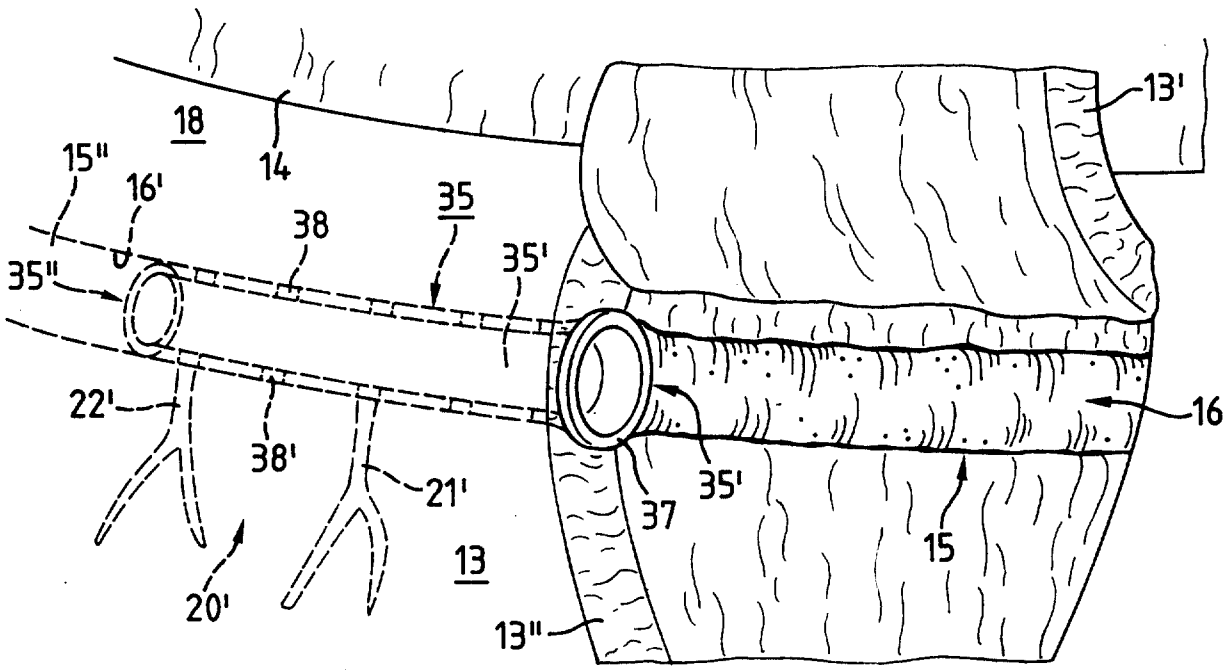

FIG. 4

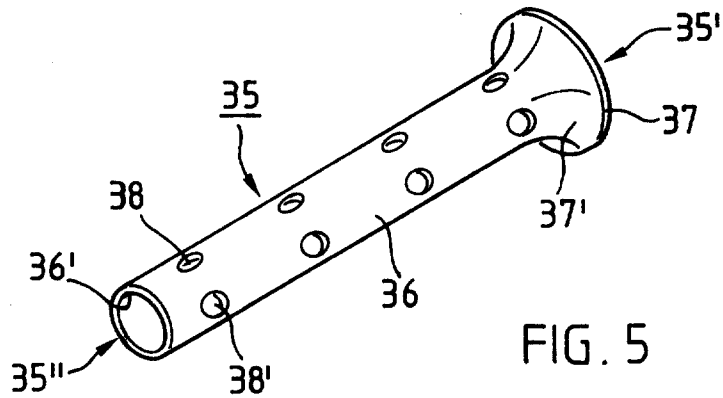

FIG. 5

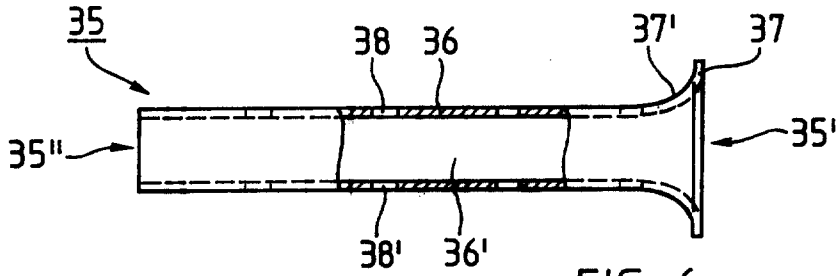

FIG. 6

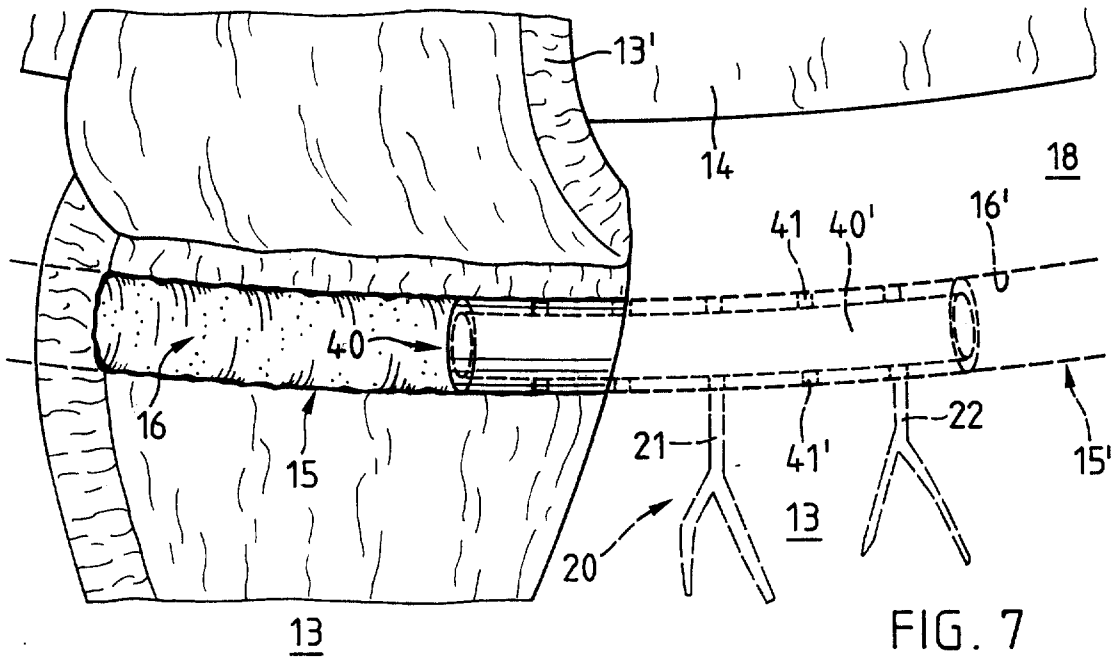

FIG. 7

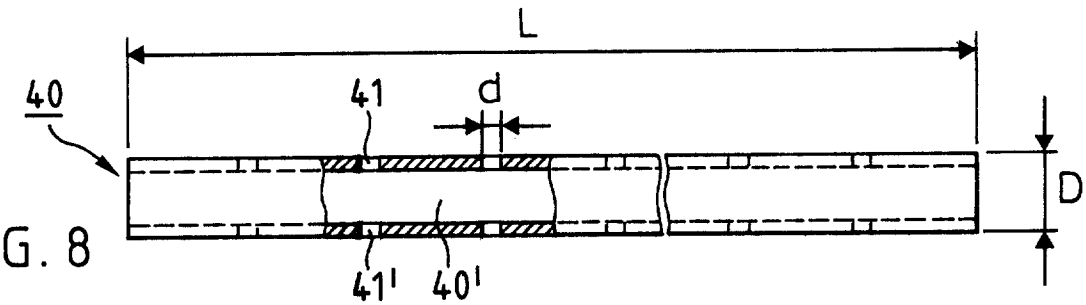

FIG. 8

FIG. 9

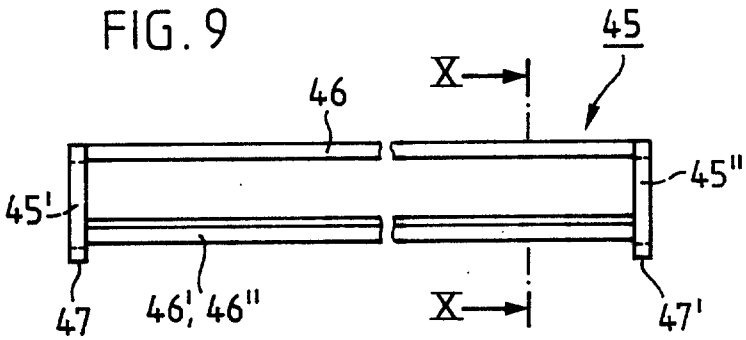

FIG. 10

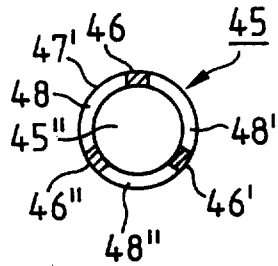

FIG. 11

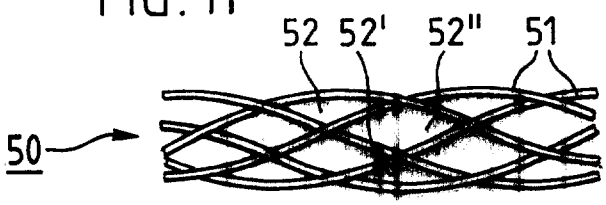

FIG. 12

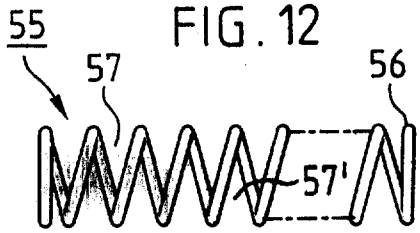

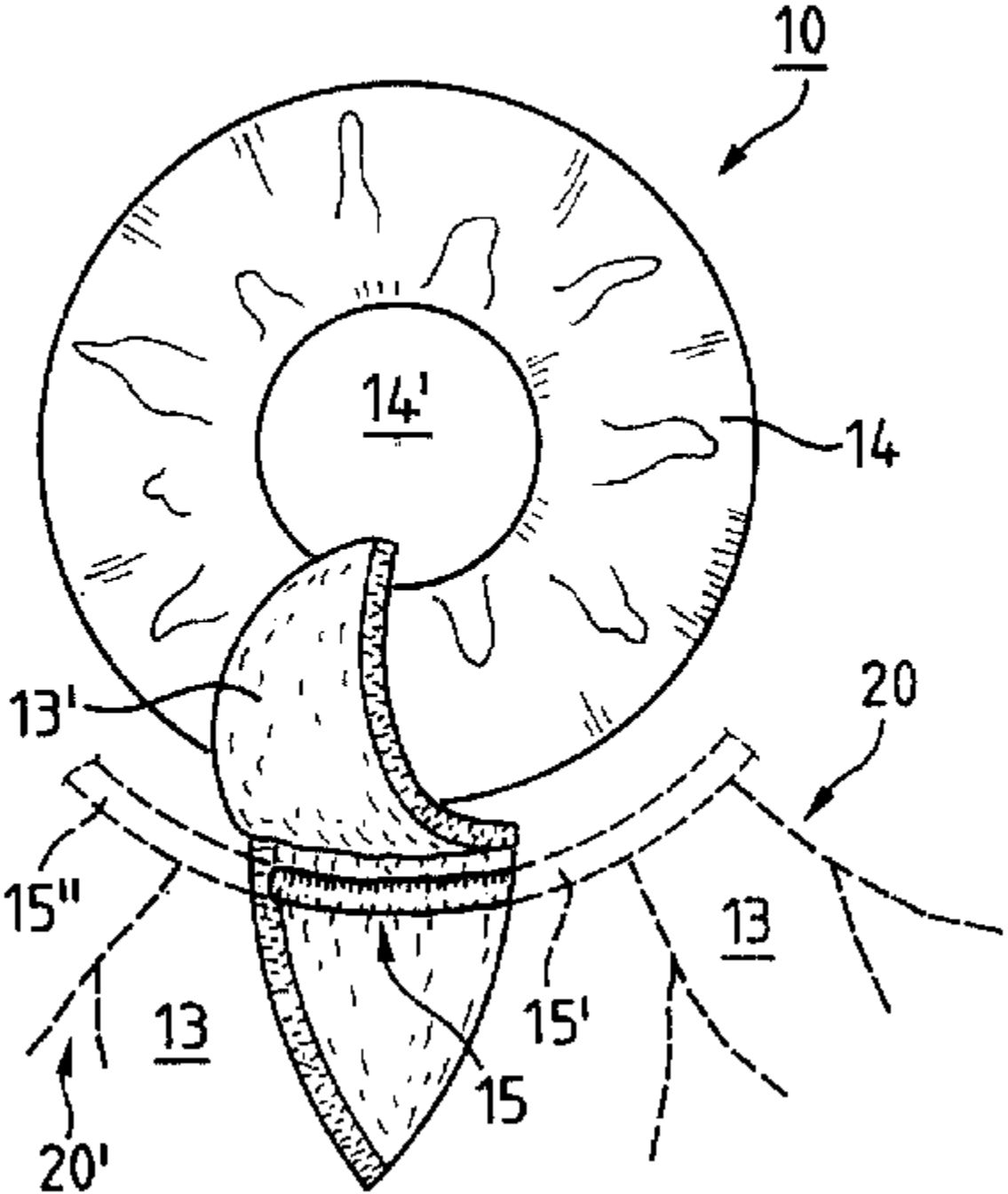
10
14'
14
13'
20
15''
13
13
15'
15
20'