Aug. 17, 1948. G. CAMILLI 2,446,999

MAGNETIC CORE

Filed Nov. 7, 1945

Fig. 1.

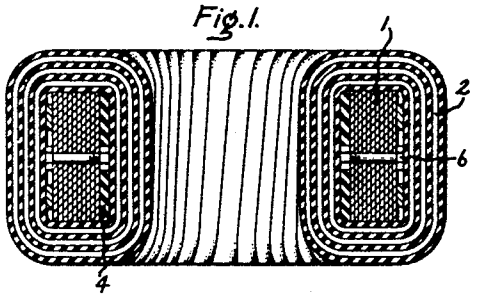

Fig. 2.

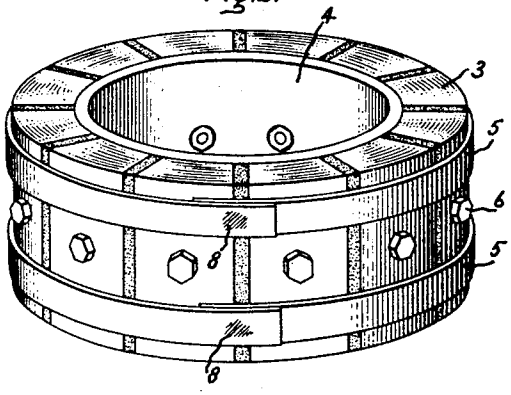

Fig. 3

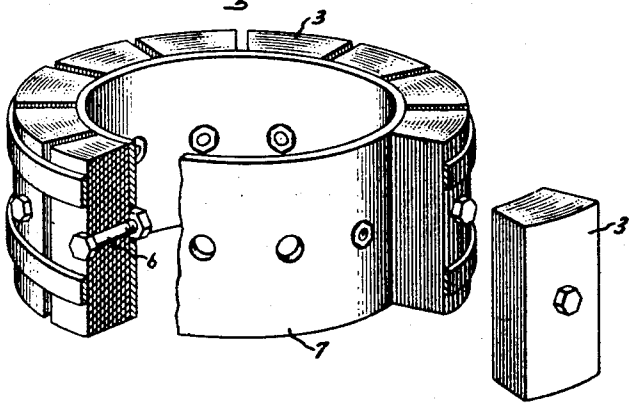

Inventor:
Guglielmo Camilli,
by Ernest C. Britton
His Attorney.

Patented Aug. 17, 1948

2,446,999

UNITED STATES PATENT OFFICE

2,446,999

MAGNETIC CORE

Guglielmo Camilli, Pittsfield, Mass., assignor to General Electric Company, a corporation of New York

Application November 7, 1945, Serial No. 627,226

1 Claim. (Cl. 175—356)

1

This invention relates to magnetic cores for induction apparatus and more particularly to improvements in multi-section cores and to the method of making such cores.

Ring type magnetic cores having a plurality of sections between which there are air gaps are used, among other places, in bushing type current transformers in order to prevent core saturation and give linear current reproduction over a wide range of primary currents. This is especially important in bus differential protective systems in which the operation depends upon the differential output current of two or more current transformers. For large diameter cores or cores having a small radial build the type of core shown in my Patent 2,382,857, which is assigned to the assignee of this application, has proved very satisfactory but because the air gaps between the sections or segments of the core are not exactly uniform this type of core construction is not well suited to small diameter cores or cores having a large radial build because in those cases the non-uniformity of the air gaps would become excessive. A well known way of making multi-segment ring type cores with uniform air gaps is to build the segments up out of core punchings which lie in radial planes. However, this necessitates the use of different shaped and size punchings for each different diameter core and each core having a different radial build and consequently a different die for making the core laminations is required in all such cases.

In order to eliminate the above disadvantages of the prior art I cut the core laminae for magnetic strip on an automatic indexing machine which merely varies the length of the cut pieces. One such machine forms the subject matter of Somerville Patent 2,369,617 which is assigned to the present assignee. The laminae are then flatwise bent to conform to the curvature of the ring shaped or toroidal core and are then strain relief annealed and set in this bent shape.

An object of the invention is to provide a new and improved magnetic core.

Another object of the invention is to provide a new and improved multi-segment toroidally shaped magnetic core.

The method of making this core forms the subject matter of my divisional application Serial No. 748,271, filed May 15, 1947, and assigned to the present assignee.

The invention will be better understood from the following description taken in connection with the accompanying drawing and its scope will be pointed out in the appended claim.

2

In the drawing Fig. 1 shows an axial section through a transformer embodying my invention, Fig. 2 is a perspective view of a completed core made in accordance with the teachings of my invention, and Fig. 3 is a partially disassembled view illustrating one of the intermediate steps in the method of making my core.

Referring now to the drawing and more particularly to Fig. 1, there is shown therein a core 1 surrounded by a winding 2 which may be the secondary winding of a bushing type current transformer in which the primary winding is a conductor which passes through the center of the torodial assembly shown in section in Fig. 1.

In Fig. 2 the core is shown as including by way of example twelve similar segments 3, of laminations, which are substantially equally spaced apart around an insulating cylinder 4 which may be made of any suitable material, such as cloth which has been saturated with a hardened phenolic resin. The segments 3 are clamped to the cylinder 4 by means of bands 5 which are preferably made of non-magnetic material, such as brass or stainless steel. The laminations in each segment are held together by bolts 6. The uniform gaps between adjacent segments are filled with any suitable material, such as Portland cement or sand held together by a resin binder.

In making my improved core the various length pieces of magnetic strip which are required are cut in any suitable manner such as by means of an automatic index shearing machine, an example of which is described in the above-identified Somerville patent. For example, in the case of the twelve segment core illustrated, twelve equal length pieces corresponding to, say, the outer lamination of each segment are cut and then the machine will cut twelve more pieces of slightly lesser length which correspond to the next innermost lamination of each segment and so on until all of the laminations are cut. They are then stacked into groups of progressively different length and each group is bolted together by bolts passing through registering holes in the laminae, which holes are also made by the same machine which cuts the laminae. The assembled and bolted together groups of laminations which, of course, are still flat are then placed about a steel mandrel 7 and clamps similar to the bands 5 in Fig. 2 but preferably made of steel are passed around the assembly and drawn up tight, thus curving all of the laminae and making the various bolted together stacks of laminae into the shape of toroidal segments 3. This assembly is then annealed at the proper temperature in a suitable

furnace so as to relieve all stress in the magnetic material, with the result that the segments 3 are set in their proper shape. The clamping bands are then removed and segments 3 lifted away from the mandrel 7, as shown in Fig. 3, after which they are transferred to the cylinder 4 in Fig. 2 which is of the same size as the mandrel 7. The non-magnetic clamping bands 5 are then placed around the core and drawn up tight and the ends welded together as indicated at 8, after which the gaps between the segments are filled with any suitable material, examples of which have previously been given. It is a simple matter to calculate the progressively different size of flat cut laminae so that when they are flatwise bent they will form true segments of a ring or toroid in which the sides of adjacent ones lie in radial planes and thus provide uniform air gaps.

While there has been shown and described a particular embodiment of this invention, it will be obvious to those skilled in the art that various changes and modifications can be made therein without departing from the invention and, therefore, it is aimed in the appended claim to cover all such changes and modifications as fall within the true spirit and scope of the invention.

What I claim as new and desire to secure by Letters Patent of the United States is:

A ring shaped magnetic core comprising, a hollow cylinder of insulating material having a plurality of holes through the wall thereof, a plurality of radially laminated flatwise curved segmentally shaped members, clamping rods extending radially through each of said members and terminating in an enlarged raised head on the inner and outer surfaces of each member, said members being located on the outer surface of said cylinder with the raised head on the inner surface of each member fitted into one of the holes in the wall of said cylinder, a pair of non-magnetic clamping bands surrounding said core on opposite sides of the raised heads on the outer surface of said segmentally shaped members, said members being separated by uniform gaps of substantial length, and solid non-magnetic inserts in said gaps.

GUGLIELMO CAMILLI.

REFERENCES CITED

The following references are of record in the file of this patent:

UNITED STATES PATENTS

Number	Name	Date
1,251,651	Espenschied	Jan. 1, 1918
1,812,520	Ellwanger	June 30, 1931
2,382,857	Camilli	Aug. 14, 1945
2,391,229	D'Entremont	Dec. 18, 1945

FOREIGN PATENTS

Number	Country	Date
424,765	Great Britain	Feb. 25, 1935
527,874	Great Britain	Oct. 17, 1940