(12) INTERNATIONAL APPLICATION PUBLISHED UNDER THE PATENT COOPERATION TREATY (PCT)

(19) World Intellectual Property Organization
International Bureau

(43) International Publication Date
7 September 2001 (07.09.2001)

PCT

(10) International Publication Number
WO 01/65032 A1

(51) International Patent Classification[7]: E04F 15/02, 15/16, B32B 7/04

(21) International Application Number: PCT/GB01/00842

(22) International Filing Date: 28 February 2001 (28.02.2001)

(25) Filing Language: English

(26) Publication Language: English

(30) Priority Data:
0004920.5 2 March 2000 (02.03.2000) GB

(71) Applicant *(for all designated States except US)*: **LAYBOND PRODUCTS LIMITED** [GB/GB]; Riverside, Saltney, Chester CH4 8RS (GB).

(72) Inventor; and

(75) Inventor/Applicant *(for US only)*: **MABBUTT, Robert, Jeffrey** [GB/GB]; The Gables, 1 The Coppergate, Gladstone Way, Hawarden, Flintshire CH5 3HB (GB).

(74) Agent: **WOMBWELL, Francis**; Potts, Kerr & Co., 15 Hamilton Square, Birkenhead, Merseyside CH41 6BR (GB).

(81) Designated States *(national)*: AE, AG, AL, AM, AT, AU, AZ, BA, BB, BG, BR, BY, BZ, CA, CH, CN, CO, CR, CU, CZ, DE, DK, DM, DZ, EE, ES, FI, GB, GD, GE, GH, GM, HR, HU, ID, IL, IN, IS, JP, KE, KG, KP, KR, KZ, LC, LK, LR, LS, LT, LU, LV, MA, MD, MG, MK, MN, MW, MX, MZ, NO, NZ, PL, PT, RO, RU, SD, SE, SG, SI, SK, SL, TJ, TM, TR, TT, TZ, UA, UG, US, UZ, VN, YU, ZA, ZW.

(84) Designated States *(regional)*: ARIPO patent (GH, GM, KE, LS, MW, MZ, SD, SL, SZ, TZ, UG, ZW), Eurasian patent (AM, AZ, BY, KG, KZ, MD, RU, TJ, TM), European patent (AT, BE, CH, CY, DE, DK, ES, FI, FR, GB, GR, IE, IT, LU, MC, NL, PT, SE, TR), OAPI patent (BF, BJ, CF, CG, CI, CM, GA, GN, GW, ML, MR, NE, SN, TD, TG).

Published:
— *with international search report*

For two-letter codes and other abbreviations, refer to the "Guidance Notes on Codes and Abbreviations" appearing at the beginning of each regular issue of the PCT Gazette.

(54) **Title:** RELEASABLE BONDING SYSTEM FOR IMPERMEABLE FLOOR COVERINGS

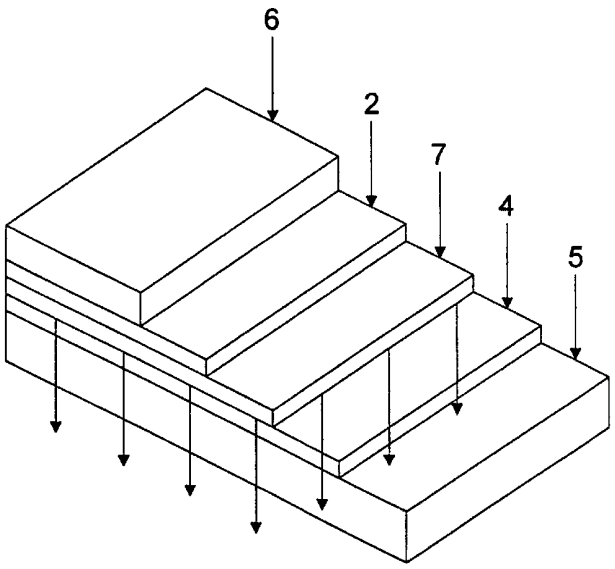

(57) **Abstract:** A releasable bonding system especially suited for releasably bonding impermeable floor coverings (6) such as vinyl and linoleum in tile and sheet form to a floor surface (5). On preparing a suitable surface (5), a quantity of a first water-based adhesive (4) is applied, into which a porous intermediate membrane (7) can then be laid and brushed over carefully. Once a convenient area of the porous intermediate membrane (7) has been laid, a second adhesive (2) may be applied, into which the impermeable covering (6) can then be laid and rolled in the usual manner. The second adhesive (2) dries through the porous intermediate membrane (7) to the floor surface (5). At a time of replacement or repair, when the floor covering is removed (6), the porous intermediate membrane (7) is also removed , leaving an undamaged floor surface (5) with an adhesive residue which may either be washed away to remove it or have fresh adhesive applied over it.

WO 01/65032 A1

RELEASABLE BONDING SYSTEM FOR IMPERMEABLE FLOOR COVERINGS

This invention relates to a releasable bonding system especially suited for releasably bonding impermeable floor coverings such as vinyl and linoleum in both tile and sheet form to a floor surface.

The conventional method of bonding impermeable floor coverings has been the wet bonding technique. In this process, adhesive is applied to the floor and the floor covering placed into the adhesive whilst it is still wet and receptive. The whole installation is then rolled in order to ensure that adhesive has fully transferred to the back of the floor covering, which enables maximum bond strength to be achieved. Typically, the installation is then left for 24 hours before subjecting it to heavy trafficking, which ensures that the bond is not damaged in its development stages. However, the problem associated with this approach is that on uplifting the floor covering, adhesive residue is often found to remain on the floor surface and, on many occasions, damage to the floor may occur.

There are many occasions when it is desirable to release previously bonded floor coverings, for example, when the installation is due for replacement or repair. For replacement to be considered, any adhesive residue must be carefully removed and/or a smoothing compound applied in order to provide a new level, absorbent surface. Not only is inconvenience caused by either partial or total closure of an area while the worn or damaged coverings are removed and made good, but the cost of doing so may be prohibitive.

Floor covering release systems for carpets and other porous materials are well known. Using this technique, a water-based adhesive is first applied to the prepared floor surface and an intermediate membrane, such as

siliconised paper, laid into the adhesive and brushed flat. A second adhesive is then applied to the intermediate membrane and the carpet laid into the wet adhesive before being thoroughly rolled to ensure good contact. When this installation is removed, all that will remain on the floor is a residue of the first adhesive, which being water-soluble, can simply be washed down or brushed off as appropriate prior to the next installation.

Unfortunately, this technique is not appropriate for certain impermeable coverings where the adhesive applied between the intermediate membrane and the floor covering does not dry sufficiently quickly, which leads to blistering problems and increased downtime.

Other prior art arrangements include WO 91/19445 (Schuster) and NL1000700 (Vof Pegom) which disclose double-sided tape-based membranes for bonding a variety of floor coverings. However, these bonding systems would again be unsuitable for securing impermeable floor coverings, such as linoleum or vinyl, since the dry tape-based adhesive would not be able to penetrate into the backing. As such, the strength of the bond would be inadequate, which would inevitably cause problems where there is heavy wear and traffic. Furthermore, on uplifting the floor covering, the dry tape-based adhesive may damage the floor surface necessitating the application of a cementitious smoothing compound, or leave adhesive residue which needs further treatment.

It is the object of this invention to provide an improved release system and method for bonded impermeable floor coverings, such as vinyl and linoleum.

The present invention provides a method for releasably securing an impermeable floor covering to a surface, comprising the steps of:

(a) applying at least one suitable first adhesive layer to said surface;

(b) releasably securing an intermediate membrane to said surface by means of said first adhesive layer;
(c) applying at least one suitable second adhesive layer to said intermediate membrane; and
(d) securing said impermeable covering to said intermediate membrane by means of said second adhesive layer;

characterised in that:

said intermediate membrane is sufficiently porous or perforated to enable said second adhesive layer to dry therethrough.

In accordance with a further aspect of the present invention, there is provided a releasable bonding system for securing an impermeable floor covering to a surface, comprising:

(a) at least one suitable first adhesive layer applied to floor surface;
(b) an intermediate membrane releasably secured to said surface by means of said first adhesive layer;
(c) at least one suitable second adhesive layer applied to said intermediate membrane for securing said impermeable covering to said intermediate membrane;

characterised in that:

said intermediate membrane is sufficiently porous or perforated to enable said second adhesive layer to dry therethrough.

The advantages of the present invention are that the second adhesive layer can dry through the porous membrane to the floor surface. As before, a water-based adhesive is first applied to the floor surface and an intermediate membrane, laid into the adhesive and brushed flat. A second adhesive is

then applied to the intermediate membrane and the impermeable floor covering laid into the wet adhesive before being thoroughly rolled to ensure good contact. However, in this present invention, the intermediate membrane is sufficiently porous to enable the second adhesive layer to dry through the membrane to the floor. Likewise, at the time of replacement or repair, when the floor covering is removed, the intermediate membrane is also removed, leaving an undamaged floor surface with an adhesive residue which may either be washed away to remove it or have fresh adhesive applied over it, prior to the application of a new covering. The benefits arise through ease of installation and significantly reduced downtime, thereby saving the end user both time and money. Therefore, the present invention is particularly suited for installation in many commercial and private premises, such as, retail outlets, hotels, airports, passenger trains and cruise ships.

A specific embodiment of the invention will now be described by way of example and with reference to the accompanying drawings, in which:

Figure 1 illustrates a perspective view of a conventional floor covering release system especially suited for carpet and other porous coverings;

Figure 2 is a perspective view of the present invention.

Referring to the drawings, Figure 1 illustrates the method of releasably securing a porous covering (1), such as a carpet, to a suitable surface (5), such as a floor. In this technique, a water-based adhesive (4) is applied to the prepared floor (5) and an intermediate membrane (3) laid into the adhesive and brushed flat. A second adhesive (2) is then applied to the intermediate membrane (3) and the covering (1) laid into the wet adhesive before being rolled. The second adhesive (2) is then allowed to dry through the porous covering (1).

The present invention depicted in Figure 2, illustrates the method of releasably securing an impermeable covering (6), such as vinyl and linoleum, to a surface (5). Careful attention to the preparation of the floor (5), prior to laying a bonded floor covering (6) is essential if the installation is to remain trouble free. The surface condition, type and construction will all have a bearing on the adhesive selection, and application procedures.

In order to secure an impermeable covering, the porous intermediate membrane (7) is usually supplied as a roll. After preparing the floor, a quantity of the first adhesive (4) is applied to the floor surface (5) using, for example, a notched trowel at a coverage of around 0.35 litres per m^2. The porous intermediate membrane (7) can then be rolled out over the first adhesive (4) and brushed over carefully, ensuring that no air bubbles are entrapped. Once a convenient area of the porous intermediate membrane (7) has been laid, the second adhesive (2) may be applied. The impermeable covering (6) can then be laid and rolled in the usual manner. The second adhesive (2) dries through the porous intermediate membrane (7) to the floor surface (5). Preferably, the porous intermediate membrane (7) will be formed from a plastics material having a predetermined density of small perforations.

The invention described can also be utilised using the latest pressure sensitive adhesives which have been developed to take advantage of the dry tack properties of modern products. In this process, an adhesive is applied to the intermediate membrane (7) with a notched trowel, which is then rolled with a roller pre-wetted with adhesive. This flattens out the adhesive ridge marks and maximises the contact area between the second adhesive (2) and the floor covering (6). The second adhesive (2) is then allowed to dry fully prior to placing the covering (6). Once the floor covering (6) has been placed and the installation completed, it is thoroughly rolled to ensure good contact and the installation can be open to immediate trafficking.

When the floor covering (6) requires uplifting, the covering (6) and intermediate membrane (7) are simply loosened at one corner and carefully pulled back together. All that will remain on the floor surface (5) is a residue of the first adhesive (4), which being water-soluble, can simply be washed down or brushed off as appropriate prior to the next installation.

CLAIMS

1. A method for releasably securing an impermeable floor covering (6) to a surface (5), comprising the steps of:

(a) applying at least one suitable first adhesive layer (4) to said surface (5);
(b) releasably securing an intermediate membrane (7) to said surface by means of said first adhesive layer (4);
(c) applying at least one suitable second adhesive layer (2) to said intermediate membrane (7); and
(d) securing said impermeable covering (6) to said intermediate membrane by means of said second adhesive layer (2);

characterised in that:

said intermediate membrane (7) is sufficiently porous or perforated to enable said second adhesive layer to dry therethrough.

2. A method for releasably securing an impermeable floor covering (6) to a surface (5) according to claim 1, further comprising a step in which said intermediate membrane (7), releasably secured to said surface (5) by means of said first adhesive layer (4), is brushed flat prior to the application of said second adhesive (2).

3. A method for releasably securing an impermeable floor covering (6) to a surface (5) according to claim 1, further comprising a step in which said impermeable floor covering (6), secured to said intermediate membrane (7) by means of said second adhesive layer (2), is thoroughly rolled to ensure good contact prior to trafficking.

4. A releasable bonding system for securing an impermeable floor covering (6) to a surface (5), comprising:

(a) at least one suitable first adhesive layer (4) applied to floor surface (5);
(b) an intermediate membrane (7) releasably secured to said surface (5) by means of said first adhesive layer (4);
(c) at least one suitable second adhesive (2) layer applied to said intermediate membrane (7) for securing said impermeable floor covering (6) to said intermediate membrane (7);

characterised in that:

said intermediate membrane (7) is sufficiently porous or perforated to enable said second adhesive layer to dry therethrough.

5. A releasable bonding system for securing an impermeable floor covering (6) to a surface (5) according to claim 4, characterised in that said first adhesive layer (4) is water-soluble.

6. A releasable bonding system for securing an impermeable floor covering (6) to a surface (5) according to claim 4, characterised in that said intermediate membrane (7) comprises of a perforated plastics material.

7. A releasable bonding system for securing an impermeable floor covering (6) to a surface (5) according to claim 4, characterised in that said impermeable floor covering (6) comprises of linoleum or vinyl in tile or sheet form.

8. A method for releasably securing an impermeable floor covering (6) to a surface (5) substantially as described herein with reference to Figure 2 of the accompanying drawings.

9. A releasable bonding system for securing an impermeable floor covering (6) to a surface (5) substantially as described herein with reference to Figure 2 of the accompanying drawings.

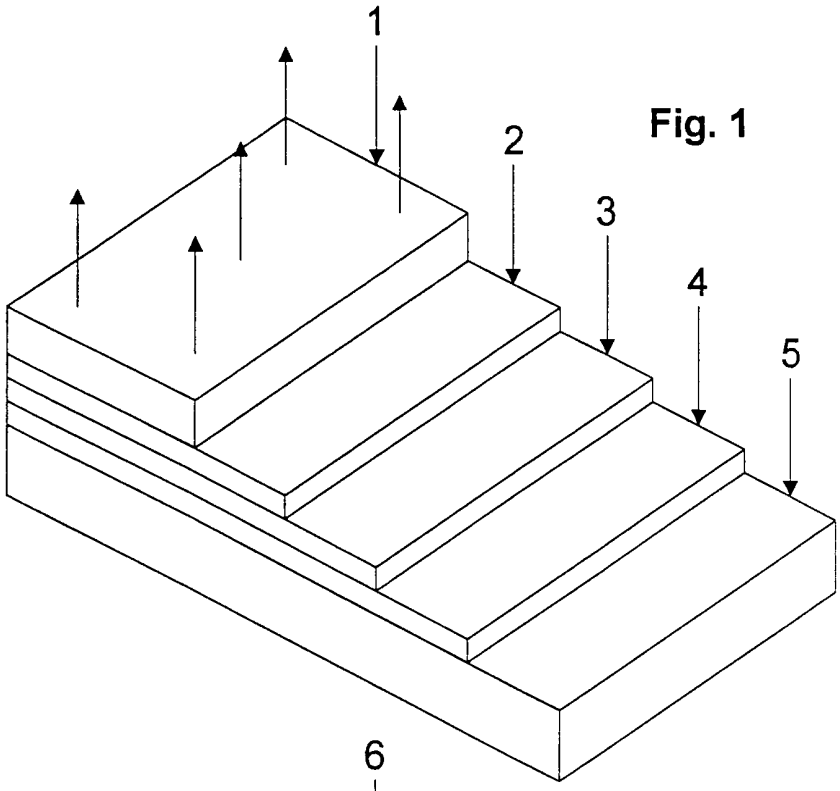

Fig. 1

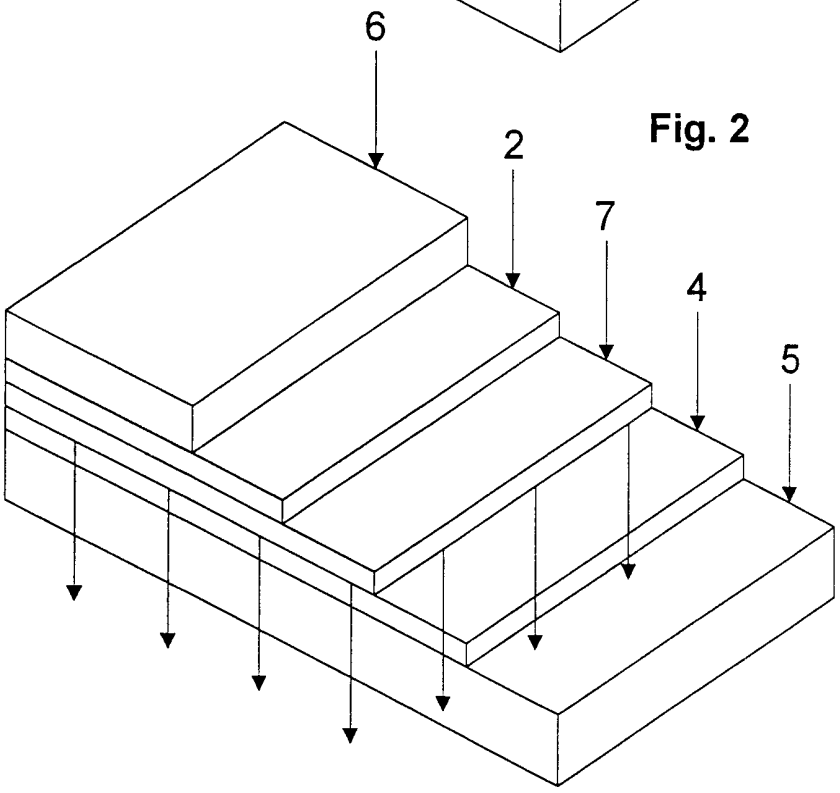

Fig. 2

INTERNATIONAL SEARCH REPORT

Inte onal Application No
PCT/GB 01/00842

A. CLASSIFICATION OF SUBJECT MATTER
IPC 7 E04F15/02 E04F15/16 B32B7/04

According to International Patent Classification (IPC) or to both national classification and IPC

B. FIELDS SEARCHED

Minimum documentation searched (classification system followed by classification symbols)
IPC 7 E04F B32B A47G

Documentation searched other than minimum documentation to the extent that such documents are included in the fields searched

Electronic data base consulted during the international search (name of data base and, where practical, search terms used)
EPO-Internal, WPI Data, PAJ

C. DOCUMENTS CONSIDERED TO BE RELEVANT

Category °	Citation of document, with indication, where appropriate, of the relevant passages	Relevant to claim No.
Y	WO 95 07398 A (DESCOL KUNSTSTOF CHEM BV ;PILON JACOB JAN (NL)) 16 March 1995 (1995-03-16) page 1, line 1 -page 3, line 29; figure 1 ---	1,4-7
Y	US 5 536 571 A (DIODATI SALVATORE ET AL) 16 July 1996 (1996-07-16) column 4, line 21 -column 8, line 48 ---	1,4-7
A	US 4 824 498 A (OSTROWSKI HENRY S ET AL) 25 April 1989 (1989-04-25) column 2, line 47 -column 8, line 10; figures 1,2 -----	1-4

☐ Further documents are listed in the continuation of box C.

☒ Patent family members are listed in annex.

° Special categories of cited documents :

"A" document defining the general state of the art which is not considered to be of particular relevance

"E" earlier document but published on or after the international filing date

"L" document which may throw doubts on priority claim(s) or which is cited to establish the publication date of another citation or other special reason (as specified)

"O" document referring to an oral disclosure, use, exhibition or other means

"P" document published prior to the international filing date but later than the priority date claimed

"T" later document published after the international filing date or priority date and not in conflict with the application but cited to understand the principle or theory underlying the invention

"X" document of particular relevance; the claimed invention cannot be considered novel or cannot be considered to involve an inventive step when the document is taken alone

"Y" document of particular relevance; the claimed invention cannot be considered to involve an inventive step when the document is combined with one or more other such documents, such combination being obvious to a person skilled in the art.

"&" document member of the same patent family

Date of the actual completion of the international search	Date of mailing of the international search report
13 June 2001	22/06/2001

Name and mailing address of the ISA	Authorized officer
European Patent Office, P.B. 5818 Patentlaan 2 NL – 2280 HV Rijswijk Tel. (+31-70) 340-2040, Tx. 31 651 epo nl, Fax: (+31-70) 340-3016	Ayiter, J

Form PCT/ISA/210 (second sheet) (July 1992)

INTERNATIONAL SEARCH REPORT

Information on patent family members

Inte ional Application No
PCT/GB 01/00842

Patent document cited in search report	Publication date	Patent family member(s)	Publication date
WO 9507398 A	16-03-1995	NL 9301538 A	03-04-1995
		AU 7864894 A	27-03-1995
US 5536571 A	16-07-1996	CA 2165968 A	12-01-1995
		EP 0706541 A	17-04-1996
		WO 9501391 A	12-01-1995
		US 5618577 A	08-04-1997
US 4824498 A	25-04-1989	NONE	