PCT WORLD INTELLECTUAL PROPERTY ORGANIZATION
International Bureau

INTERNATIONAL APPLICATION PUBLISHED UNDER THE PATENT COOPERATION TREATY (PCT)

(51) International Patent Classification 5 :		(11) International Publication Number:
F42B 12/34	A1	WO 93/20402
		(43) International Publication Date: 14 October 1993 (14.10.93)

(21) International Application Number: PCT/US93/02336

(22) International Filing Date: 5 March 1993 (05.03.93)

(30) Priority data:
863,647 2 April 1992 (02.04.92) US

(71) Applicant: OLIN CORPORATION [US/US]; 350 Knotter Drive, P.O. Box 586, Cheshire, CT 06410-0586 (US).

(72) Inventors: SCHLUCKEBIER, David, K. ; 27 Sun Valley Drive, Cabot, AR 72023 (US). DIPPOLD, Jack, D. ; 1002 Timber Lake Drive, Edwardsville, IL 62025 (US). CORZINE, Alan, J. ; 419 East Alton Street, Marine, IL 62061 (US).

(74) Agents: BURDICK, Bruce, E. et al.; Olin Corporation, 350 Knotter Drive, P.O. Box 586, Cheshire, CN 06410-0586 (US).

(81) Designated States: AU, BB, BG, BR, CA, CZ, FI, HU, JP, KP, KR, KZ, LK, MG, MN, MW, NO, NZ, PL, RO, RU, SD, SK, UA, European patent (AT, BE, CH, DE, DK, ES, FR, GB, GR, IE, IT, LU, MC, NL, PT, SE), OAPI patent (BF, BJ, CF, CG, CI, CM, GA, GN, ML, MR, SN, TD, TG).

Published
With international search report.

(54) Title: FULL METAL JACKET HOLLOW POINT BULLET

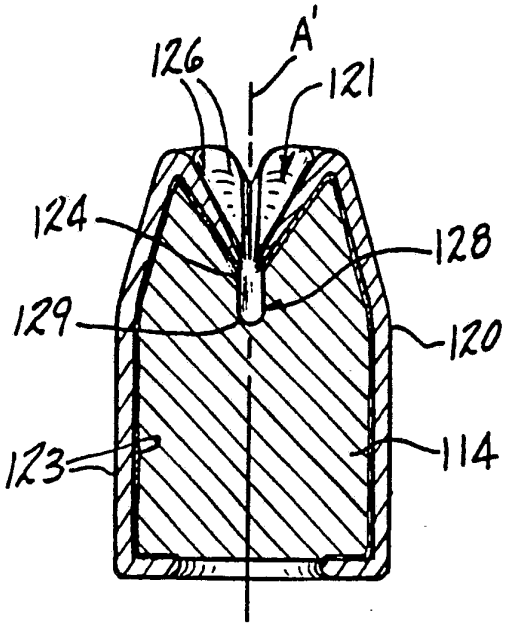

(57) Abstract

A full metal jacket hollow point bullet (110) is disclosed which has a portion of the jacket (120) extending within the hollow open front end (116) of the bullet. The portion of the jacket in the hollow front end has a plurality of radial slits and reinforced pointed prongs (126) therebetween. An empty blind bore (128) extends from the tips of the prongs (126) axially rearwardly into the bullet core (114). The base of each of the prongs is reinforced at the mouth of the front end by a fillet (130). These prongs (126) project generally radially outward upon upset of the bullet in soft tissue after passing through barrier materials such as clothing and deer hide. The jacket has a coating of copper oxide (123) on its inner and outer surfaces which bonds the soft lead core to the jacket and minimizes lead wash and lubricates the bullet.

FOR THE PURPOSES OF INFORMATION ONLY

Codes used to identify States party to the PCT on the front pages of pamphlets publishing international applications under the PCT.

AT	Austria	**FR**	France	**MR**	Mauritania
AU	Australia	**GA**	Gabon	**MW**	Malawi
BB	Barbados	**GB**	United Kingdom	**NL**	Netherlands
BE	Belgium	**GN**	Guinea	**NO**	Norway
BF	Burkina Faso	**GR**	Greece	**NZ**	New Zealand
BG	Bulgaria	**HU**	Hungary	**PL**	Poland
BJ	Benin	**IE**	Ireland	**PT**	Portugal
BR	Brazil	**IT**	Italy	**RO**	Romania
CA	Canada	**JP**	Japan	**RU**	Russian Federation
CF	Central African Republic	**KP**	Democratic People's Republic of Korea	**SD**	Sudan
CG	Congo			**SE**	Sweden
CH	Switzerland	**KR**	Republic of Korea	**SK**	Slovak Republic
CI	Côte d'Ivoire	**KZ**	Kazakhstan	**SN**	Senegal
CM	Cameroon	**LI**	Liechtenstein	**SU**	Soviet Union
CS	Czechoslovakia	**LK**	Sri Lanka	**TD**	Chad
CZ	Czech Republic	**LU**	Luxembourg	**TG**	Togo
DE	Germany	**MC**	Monaco	**UA**	Ukraine
DK	Denmark	**MG**	Madagascar	**US**	United States of America
ES	Spain	**ML**	Mali	**VN**	Viet Nam
FI	Finland	**MN**	Mongolia		

FULL METAL JACKET HOLLOW POINT BULLET

This invention generally relates to bullets and more particularly to a small caliber projectile having a hollow point and a full metal jacket.

Jacketed bullets are well known in the art. The bullet typically is made of a lead alloy and has a jacket typically made of a copper alloy and covers at least part of the ogive and the cylindrical body portions of the bullet. This type of jacketed bullet gives a more controlled expansion in soft body tissue than an unjacketed lead bullet. Further expansion can be obtained upon initial target penetration by providing a hollow in the front end of the bullet. The front end may also be formed with cuts and/or ribs in the jacket or with cuts or ribs in the core within the hollow tip to further control the expansion upon upset of the bullet in soft tissue.

One typical hollow point jacketed bullet is disclosed in U.S. Patent no. 3,157,137, assigned to the assignee of the present invention. This patent discloses a jacketed bullet with a rosette type of hollow point formed entirely from the open jacket end. Another is U.S. Patent No. 3,349,711 which has external cuts in the ogive portion of the full metal jacket around the hollow tip. Another example is U.S. Patent No. 4,550,662. In this patent, the hollow tip is formed with axially extending ribs in the soft metal core.

Another hollow point jacketed bullet, using aluminum for the jacket, is disclosed in U.S. Patent No.

4,610,061, assigned to the assignee of the present invention. In this patent, the jacket extends only part way into the hollow and partial cuts are made in the jacket at the rim of the hollow point.

All of these bullets provide relatively predictable curling back of the jacket upon upset of the bullet in soft tissue. The petals formed by the jacket segments peeling back curl beyond 180°, folding under the expanding head of the bullet, along the cylindrical portion thereof. Thus the cutting swath in soft tissue is generally determined by the outer diameter of the expanded head of the upset bullet.

Maximum expansion of the head is desirable to maximize hemorrhaging and tissue damage. This maximized expansion maximizes the lethality in game animals. However, if the head expands too much, the bullet will separate into segments which limits the penetration. Accordingly, to obtain significant depth of penetration, the mass of the bullet must remain behind the head.

When a particular projectile is designed for law enforcement use consideration must be given to penetration performance through various barrier layers such as fabric, glass, and sheet metal. These barriers cannot all be accounted for in a single projectile design. To achieve a desired penetration depth after passing through known barriers with a desired upset shape, hollow point bullets are not presently used.

A hollow point bullet is optimized to achieve a desired upset shape following penetration through generally soft material, typically simulated by water or gelatin. If there is a barrier in front of the soft body tissue, such as a layer of sheet metal or a piece of glass, a hollow point bullet will deform immediately thus changing the penetration in the body tissue.

However, it would be desirable to have a bullet which would penetrate through known barriers and still upset and expand in a manner that maximizes tissue damage.

It is an object of the invention to provide a bullet which causes improved tissue damage in soft body tissue without substantial separation of the jacket from the bullet core.

It is another object of the invention to provide a controlled penetration bullet which has an increased effective head diameter upon upset after penetrating through a barrier.

It is another object of the invention to provide a jacketed bullet which produces jacket petals with radially outwardly extending pointed prongs after penetration through clothing barrier materials into soft body tissue.

It is a further object of the invention to provide a jacketed bullet with improved adherence of the jacket to the core.

It is a still further object of the invention to provide a jacketed bullet which, upon upset, produces outwardly curled jacket petals which have curled back portions joining curved radially outwardly extending pointed prongs at a hardened transition region.

The full metal jacketed bullet in accordance with the invention is a generally cylindrical jacketed body with a generally ogival front portion and an open cavity in the front end. The cavity preferably has a tapered front portion and a cylindrical rear portion. The bullet jacket extends over the cavity mouth at a hardened transition region and extends into the tapered front portion of the open cavity in the front end.

The portion of the metal jacket in the cavity has a plurality of spaced axial slits extending through the

jacket thickness at the cavity mouth and extending rearwardly toward the central axis so as to form spaced pointed prongs, each directed rearwardly along the cavity wall toward the central axis of the bullet. Each prong has a reinforcing fillet at the the base of each slit, in the transition region at the cavity mouth which reinforces the prong. The cavity has a generally cylindrical axial extension portion extending beyond the tips of the jacket prongs.

These slits and prongs cause the jacket to peel back upon upset in spaced petals. Each petal has a curled portion corresponding to the jacket material formed over the ogive of the bullet, a transition portion corresponding to the jacket material at the mouth of the cavity, and a pointed prong corresponding to the jacket material in the cavity. The transition portion is hardened and has reinforcing ribs or fillets which substantially prevent bending during upset.

The sharp pointed prongs formed at the ends of the petals unfold differently than the curled portions of the petals. The prongs unfold from the transition region. Thus, as the petals unfold, the prongs extend radially outward rather than curling back with the petal material. The result is an upset shape which has the bullet core mushroomed outward over the curled back portion of the jacket petals and outwardly projecting prongs of jacket material radiating outward behind the mushroomed head.

Since the bullet is rotating as it enters soft body tissue of a target animal, the effective head diameter is increased substantially by the prongs. This increases substantially the cutting swath of the upset bullet. In addition, the upset bullet lodged within soft tissue will continue to cause hemorrhaging and

further internal damage to the animal as the animal moves due to these outwardly directed prongs. This will hasten the demise of the injured animal and hence increase the lethality of the bullet.

In a preferred embodiment of the invention the cavity includes a central cavity extension. This extension is a generally cylindrical blind bore extending rearwardly from the bottom of the cavity. This extension facilitates proper petal expansion and performance through barrier materials such as heavy clothing and deer hide.

The jacket on the bullet of the invention is also coated with a metal oxide coating which increases the surface adhesion of the lead core to the inner surface of the jacket. This substantially increases the flow of core material outward with formation of the jacket petals upon upset

These and other objects, features, and advantages of the present invention will become more apparent upon consideration of the following detailed description when taken in conjunction with the accompanying drawing.

Figure 1 is a side elevational view of a cartridge containing the bullet in accordance with a first embodiment of the invention.

Figure 2 is an end view of the bullet of the first embodiment of the invention removed from the cartridge case in Figure 1.

Figure 3 is a longitudinal cross sectional view of the bullet of the invention taken along the line 3-3 in Figure 2.

Figure 4 is an end view of a jacketed bullet core prior to forming the ogival nose portion of the bullet shown in Figures 1 through 3.

Figure 5 is a longitudinal sectional view of the jacketed core taken along the line 5-5 in Figure 4.

Figure 6 is a sectional view of an upset bullet in accordance with the first embodiment of the invention.

Figure 7 is a perspective view of the upset bullet of the invention shown in Figure 6.

Figure 8 is a side elevational view of a cartridge containing the bullet in accordance with a second preferred embodiment of the invention.

Figure 9 is a longitudinal cross sectional view of the second embodiment of the bullet of the invention taken along the line 9-9 in Figure 10.

Figure 10 is an end view of the bullet of the invention removed from the cartridge case in Figure 8.

Figure 11 is a partial longitudinal sectional view of the invention shown in Figure 10 taken along the line 11-11.

Figure 12 is an end view of a jacketed bullet core prior to forming the ogival nose portion of the second embodiment shown in Figures 8 through 11.

Figure 13 is a longitudinal sectional view of the jacketed core taken along the line 13-13 in Figure 12.

Figure 14 is a perspective view of the upset bullet of the invention shown in Figures 8 through 11 following upset in simulated soft body tissue after penetration through several layers of fabric barrier material.

Figure 15 is a longitudinal cross-sectional view of the second embodiment of the invention having a divergent recess.

A first embodiment of a full metal jacket hollow point bullet 10 constructed in accordance with the invention is shown loaded into a cartridge case 12 in Figure 1 and separately in Figures 2 and 3.

Bullet 10 has a generally cylindrical core body portion 14, a generally ogival front end portion 16, and a hollow open recess or cavity 18 axially extending into the front end portion 16. The core portions 14 and 16 are preferably formed of a malleable metal such as lead or a lead alloy.

A full metal jacket 20 covers at least a major portion of the cylindrical core body portion 14, all of the ogival front end portion 16 and extends fully into the hollow open cavity 18 so as to enclose the front end portion 16. The jacket is made of a malleable metal such as a copper or copper alloy.

A plurality of radial slits 22 in the jacket extend through the wall thickness of the full metal jacket 20 and extend axially from the apex 24 of the hollow open cavity 18 inside the cavity to the mouth 26 of the cavity. The portions of the jacket in the cavity 18 thus form pointed jacket prongs 28 between the slits 22 which converge at the apex 24 on the central axis A.

The front end portion 16 is preferably frustoconical in shape. The cavity 18 may have a curved profile or may have a generally conical profile having a straight sidewall. The choice depends on the caliber and the precision of the tooling necessary to form the cavity. Each prong 28 may be joined with the other prongs at the apex 24 or may be separated, again, depending on the precision of the tooling forming the slits in the jacketed core.

The bullet 10 is formed from a jacketed blank 30 shown in figures 4 and 5. A cylindrical core blank 32 of lead is swaged or molded inside a flat bottomed cup shaped jacket blank 34 to form jacketed blank 30. A conical punch having radially spaced cutting ridges is then pressed against the flat bottom of the jacket blank

30 to form a curved or conical indent with radial slits 22 through the jacket 20 in the bottom of the blank 30. This indented blank is then forced into a conical cavity of a forming tool to constrict the bottom of the jacketed blank 30 to form the generally frustoconical front end portion 16 having the open cavity 18 with the converging prongs 28 as is shown in Figures 1 through 3. At the same time, the rear end 36 of the jacket blank 34 is crimped over the rear of the core blank 32 so as to securely capture and lock the core 14 within the jacket 20.

Thus the method of forming the full jacketed hollow point bullet 10 in accordance with the invention having an ogival front end portion 16 with a forwardly open cavity 18 therein comprises the steps of:

a) drawing a sheet metal blank into a cup shaped jacket blank 34 having a continuous flat bottom and a generally uniform thickness wall;

b) forming a malleable metal core 32 in the cup shaped jacket blank 34 against said bottom by swaging or molding the core directly into the blank;

c) indenting said bottom of said jacket blank;

d) cutting a plurality of radial slits 22 through the jacket wall in the indented bottom either separately or simultaneously with indenting the bottom; and

e) forcing the end of the blank 30 containing the core against the indented bottom of the blank into a concave cavity of a forming tool to deform the end of the blank into an ogival front end portion 16 of the bullet 10 and the bottom into an open cavity 18 with the slits 22 through the jacket 20 remaining in the open cavity 18.

Finally, the rear end 36 of the blank 30 is crimped over the rear of the core 32 to lock it in place and ensure that the core 14 remains fully inserted within the front end of the jacket 20.

Figures 6 through 7 illustrate the mushrooming of the bullet 10 of the invention and the unfolding of the prongs 28 when the first embodiment of the bullet of the invention is fired into soft body tissue. The upset bullet 10 forms a mushroomed head 38 in front of a generally cylindrical body portion 39 as the soft lead is forced forward and out during penetration and deceleration.

The prongs 28 separate radially as the head 38 forms causing the front end of the jacket to split and form petals 40 which are folded back. These petals 40 provide support for the prongs and cause them to extend outward from the folding petals 40. Each prong projects from a transition region 42 of the petal 40 corresponding originally to the jacket material at the mouth 26 of the cavity 18. This transition is a region of work hardened metal occurring because of the work hardening which takes place during constriction of indented end of the blank 30 to form the frustoconical front end portion 16.

The upset bullet 10 shown in Figures 6 and 7 results from penetration into soft body tissue. The soft body tissue is here simulated by penetration in gelatin. The angle and curvature at which the prongs 28 extend outward from the body portion upon upset will depend on several factors, such as projectile velocity and particular jacket alloy characteristics.

In the illustrated first embodiment, the jacket was draw formed from a cup shaped blank. The blank was made from gilding metal which is a brass alloy

conforming to ASTM B36. The bullet core of lead alloy is swaged into the draw formed cup shaped blank. The 10mm finished bullet was conventionally inserted into a 10mm case loaded with 5.2 grains of Bullseye® No. 2 propellant powder (by Hercules Powder Co.).

Five test rounds were fired from a Colt model Delta Elite automatic pistol into a standard gelatin test module from a distance of about 10 feet at a velocity of about 950 feet per second. The gelatin test module was 6" by 6" by 18". The five resultant upset bullets retrieved from the test modules all exhibited the structure as shown in Figures 6 and 7.

A different result occurs when the bullet 10 is fired through barrier materials such as several layers of heavy clothing or deer hide prior to entering soft body tissue. Penetration through such barrier materials is desired by the FBI and other law enforcement agencies for defensive use by their officers. In this situation, the cavity in the nose of the first embodiment of the present invention is filled with barrier material as the impacting bullet punches through the barriers. The barrier material essentially eliminates the recess. The barrier material thus prevents expansion of the bullet when it then enters soft tissue.

It has been found, however, that a second embodiment of the invention, having an empty recess extension behind the forwardly open divergent portion of the recess compensates for this condition. This embodiment is shown in Figures 8 through 14. More particularly, this second preferred embodiment of the full metal jacket hollow point bullet 110, constructed in accordance with the invention, is shown loaded into a cartridge case 112 in Figure 8 and separately in Figures 9 and 10.

As in the first embodiment, bullet 110 has a generally cylindrical core 114 which has a generally ogival front end portion 116 and a hollow open recess 118 axially extending into the front end portion 116. The core 114 is preferably formed of a malleable metal such as lead or a lead alloy.

A full metal jacket 120 covers at least a major portion of the cylindrical core 114, all of the ogival front end portion 116 and extends fully into a hollow divergent portion 121 of the recess 118 so as to cover the mouth 119 of the front end portion 116. The jacket 120 is made of a malleable metal such as a copper or copper alloy and is preferably about 95% copper and about 5% zinc.

The jacket 120 has a chemically deposited copper oxide coating 123, shown in Figure 15, on its inner and outer surfaces produced by alkaline oxidation. The coating 123 is produced by immersing the cups in a high temperature solution of potassium hydroxide and potassium chlorite. This coating process was developed and is applied by MBI Division of Hubert Hall, Inc. The coating 123 has a rough surface which, on the inside surface, frictionally bonds the core material to the jacket and thus minimizes lead wash during upset as is described in more detail below with reference to Figure 14. The coating 123 on the outside surface is polished to remove the roughness and yield a smooth appearance and lubricate the exterior of the bullet.

A plurality of radial slits 122 in the jacket extend through the wall thickness of the jacket 120 and extend outwardly and axially from a generally circular base 124 of the divergent portion 121 of the recess 118 to the mouth 119 of the recess 118. The portions of the jacket in the recess 118 form spaced pointed jacket

prongs 126 between the slits 122 which converge toward the central axis A'.

Extending rearwardly from the base 124 of the divergent portion 121 of the recess 118 is a coaxial, generally cylindrical extension portion 128 of the recess 118. The extension portion 128 terminates at a conical curved or flat bottom 129. The jacket prongs 126 do not extend into this extension portion 128 so that the core 114 material is exposed to the recess extension 128.

The front end portion 116 is preferably frustoconical in shape as shown or curved in a smooth arc. The recess extension 128 preferably extends rearwardly to the base of the front end portion 116 but may extend a different amount depending on the desired mushrooming on upset.

The divergent portion 121 of the recess 118 may have a curved sidewall profile as in Figure 9 or may have a generally conical profile having a straight sidewall as in Figure 15. The choice depends on the caliber, the upset performance desired and the precision of the tooling necessary to form the recess 118. On the other hand, the recess extension preferably has a cylindrical or slightly divergent shape which is primarily dictated by the extraction requirements of the forming tool.

Each prong 126 has a generally triangular shape and generally terminates in a point situated at or near the base 124 of the divergent portion of the recess 118. The prongs 126 are also preferably symmetrically spaced about the central axis A'. As is best shown in Figure 11, each prong 126 has a reinforcing fillet 130 at each side of the end of the slit 122 forming the prong 126 at the mouth 119 of the recess 118. These

fillets 130 restrain the rearward bending of the jacket material at the mouth 119 during bullet upset. The result is the formation of outwardly directed prongs 126 as in Figure 14 upon upset in soft body tissue.

The bullet 110 is initially formed in a similar manner as described above for the first embodiment, from a jacketed blank 132 shown in figures 12 and 13. However, in this case, the jacket cup is first coated as above described, with a rough copper oxide coating. In addition, the jacket cup may have a thickened sidewall and bottom so that a reverse taper interlock with the core is integrally formed during production.

The core 114 is inserted into the cup to form the blank 132. A forming tool is then pressed into the bottom of the blank 132 to form an inwardly curved bottom 134 and the radial slits 122. As in the first embodiment, the slits 122 pierce completely through the jacket 120 at the mouth 119 and into the front end portion of the core 114. In addition, slits 122 extend completely through the jacket from the mouth 119 to the central axis A so as to completely separate each prong 126 from one another. The included angle between the sides of the slit 122 is preferably sized by the forming tool to about 45° so as to optimize the reinforcing fillets 130 at the base of the prongs 126, i.e. extending between the prongs 126 and the jacket 120 at the mouth 119.

The blank 132 is then removed from the die and a second forming tool having a conical recess with a coaxial forming pin is lowered over the front end of the slit blank 132 shown in Figures 12 and 13. This forming tool squeezes the mouth 119 of the jacket 120 together to form the frustoconical or ogival nose of the bullet 110 as shown in Figures 8 through 10 and punches the

recess extension 128 into the core 114 from the base 124 of the divergent portion 121. Simultaneously, this forming pin separates the points of the prongs 126 so that they are spaced about the axis A'.

As in the first embodiment, the squeezing of the front end portion 116 work hardens the jacket 120 at the mouth 119 to form a work hardened transition between the prongs 126 and the portion of the jacket 120 outside the recess 118. This hardened transition also includes the fillets 130. Thus the transition is doubly reinforced against bending that occurs upon upset.

The method of forming the full jacketed hollow point bullet 110 in accordance with this embodiment of the invention having an ogival front end portion 116 with a forwardly open recess 118 therein thus comprises the steps of:

a) drawing a sheet metal blank into a cup shaped jacket blank having a continuous flat bottom and a generally uniform thickness bottom wall;

b) coating the inside and outside surfaces of the blank with a copper oxide coating 123;

c) forming a malleable metal core 114 in the cup shaped jacket blank against said bottom by swaging or molding the core directly into the blank;

d) indenting said bottom of said jacket blank;

e) cutting a plurality of radial slits 122 through the jacket wall in the indented bottom 134 either separately or simultaneously with indenting the bottom;

f) forming a plurality of fillets in the jacket adjacent one end of the slits;

g) forcing the end of the blank 132 containing the core 114 against the indented bottom 134 of the blank into a concave cavity of a forming tool to deform

the end of the blank into an ogival front end portion 116 of the bullet 110 and the bottom 134 into an open recess 118 with the slits 122 through the jacket 120 in a divergent portion of the recess 118; and

h) forming an empty recess extension 128 in the recess 118 rearward of the divergent portion 121.

Finally, the rear end 136 of the blank 132 is crimped over the rear of the core 114 to lock it in place and ensure that the core 114 remains fully inserted within the jacket 120.

Figure 14 illustrates the mushroomed head 210 of the second embodiment 110 of the invention and the unfolding of the prongs 126 when the bullet 110 is fired first through a composite barrier consisting of a layer of denim fabric, a down vest material layer, a flannel shirt and finally a cotton shirt and then into soft body tissue. Upset and mushrooming does not occur during barrier penetration.

As the hardened annular mouth 119 of the bullet 110 enters the barrier layers, the annular mouth 119 punches out a patch of the barrier materials. This patch fills the divergent portion of the recess 118. As the bullet exits the barrier material and passes into soft tissue, the forward resistance is reduced. This permits the inertia of the core 114 acting against the soft tissue to force the mouth 119 away from the bullet axis A' pushing the prongs 126 out of the recess as the nose expands which pushes the barrier material out, simultaneously causing the core material to spread out the nose of the bullet 110. This forces the prongs 126 to rotate outward as the core material forms the mushrooming head 210. However, the prongs 126 are prevented from folding rearwardly with the folding petals 138 because of the reinforcing fillets 130 at the

hardened transition 140 corresponding to the mouth 119 above described.

Finally, the jacket has a reverse taper which tends to prevent forward movement of the core during upset. Also, the inside coating 123 prevents the core from slipping forward in the jacked during mushrooming.

While the invention has been shown and described with reference to two preferred embodiments, other variations and modifications are contemplated as being within the scope of the invention. For example, the fillets 130 may be located other than at the end of the slit at the mouth 119. The fillet 130 may be located between the slits 122 by a suitably internally ribbed jacket 120. In this case the fillets would be preferably formed during the drawing of the jacket cup or blank prior to the insertion of the core 114, by use of a suitably notched bottom forming tool. Also, different jacket thicknesses and alloy compositions may be utilized and different numbers of slits may be cut in the jacket. In addition, the shape of the nose, the cavities or recesses 18 and 118, and the mouths 26 and 119 may be differently shaped which will change the amount of work hardening of the jacket at the region of the mouth and therefore the position of the transition region and shape of the prongs may be selectively varied. Accordingly it is intended to embrace all such variations and modifications as defined by the scope of the appended claims.

WHAT IS CLAIMED IS:

1. A bullet (110) characterized by:

a malleable metal body (114) symmetrical about an axis therethrough, said body having a forwardly open recess (118) in one end , said recess having a forward divergent portion (121) and an coaxial extension portion (128) joining said divergent portion at an annular base therebetween, said divergent portion terminating in a mouth (119) at said end; and

a metal jacket (120) over a major portion of said body (114) enclosing said one end, said jacket extending fully into said divergent portion of said recess over said mouth, said jacket in said divergent portion having a plurality of circumferentially spaced radial slits (122) forming pointed prongs therebetween, said prongs each having a hardened transition region about said mouth (119) and at least one reinforcing fillet (130) on at least one of said prongs about said mouth.

2. The bullet according to claim 1 characterized in that each of said slits (122) extends completely through said jacket (120) in said recess.

3. The bullet according to claim 2 characterized in that each of said prongs (126) has two fillets (130) at the mouth of said recess (118).

4. The bullet according to claim 3 characterized in that said fillets (130) extend from the tip of the prong (126) to a point on an outer forward side (116) of the bullet.

5. The bullet according to claim 3 characterized in that the bullet has a copper oxide coating (123) on its exterior.

6. The bullet according to claim 1 characterized in that said fillet (130) is an inwardly bent edge portion of the prong (126) of said jacket (120) adjacent said slit (122) at said mouth (119) of said recess (118).

7. The bullet according to claim 1 characterized in that said extension portion is a cylindrical hole (128) extending rearwardly from said base having a generally curved bottom.

8. The bullet according to claim 1 characterized in that said jacket further comprises an oxide coating (123) on the inside surface of said jacket (120) frictionally bonding with said core.

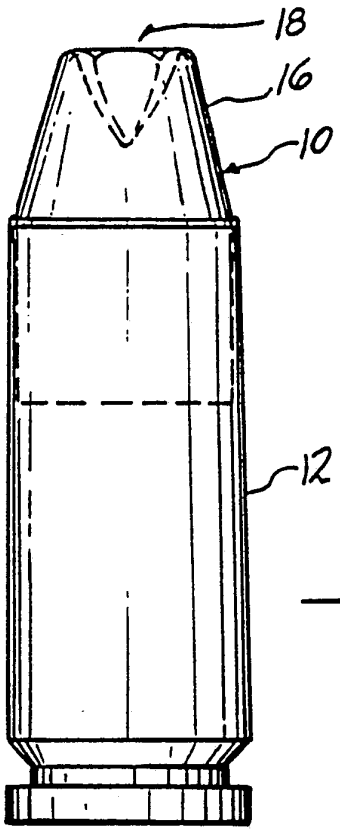

FIG-1

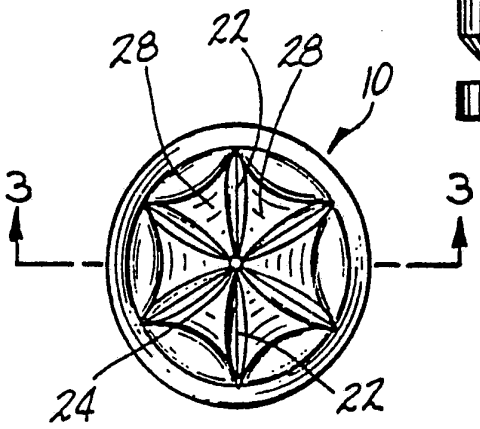

FIG-2

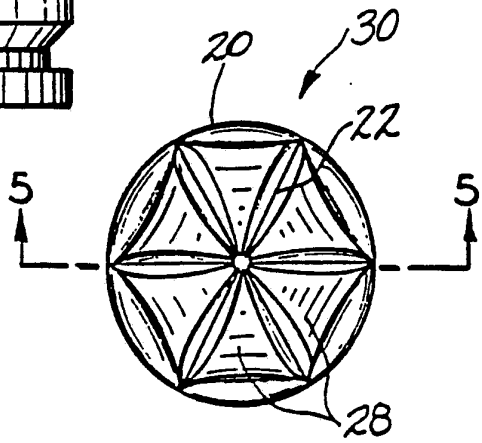

FIG-4

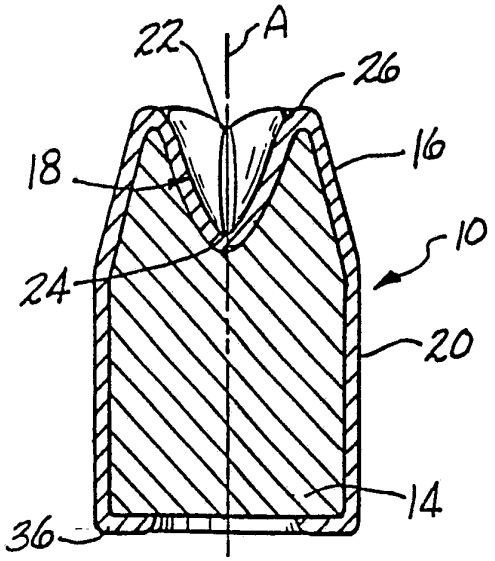

FIG-3

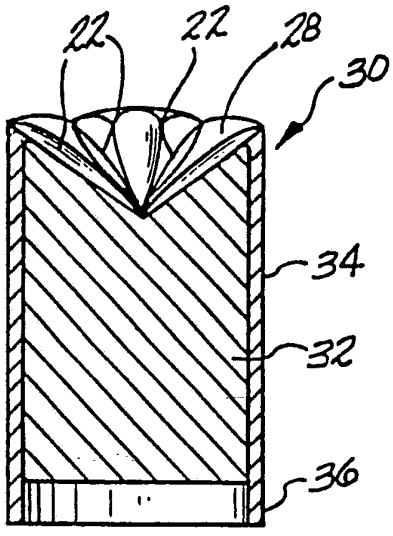

FIG-5

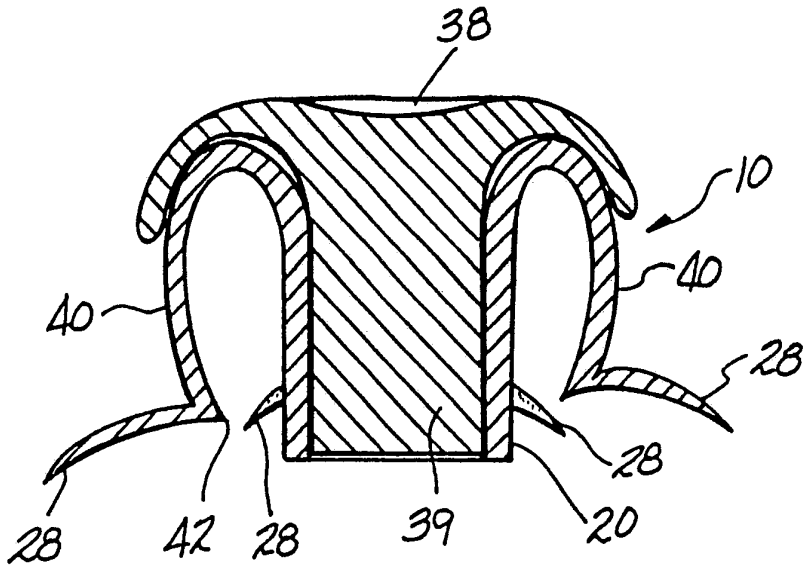

FIG-6

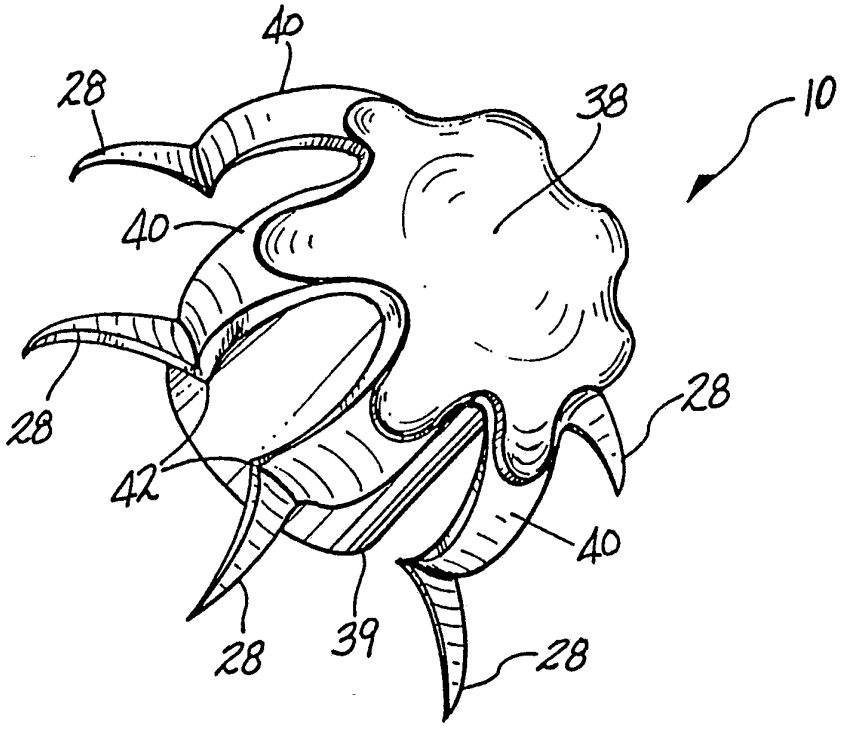

FIG-7

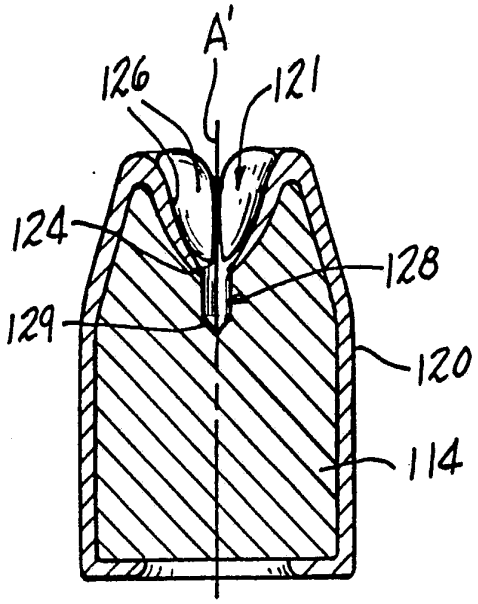

FIG-9

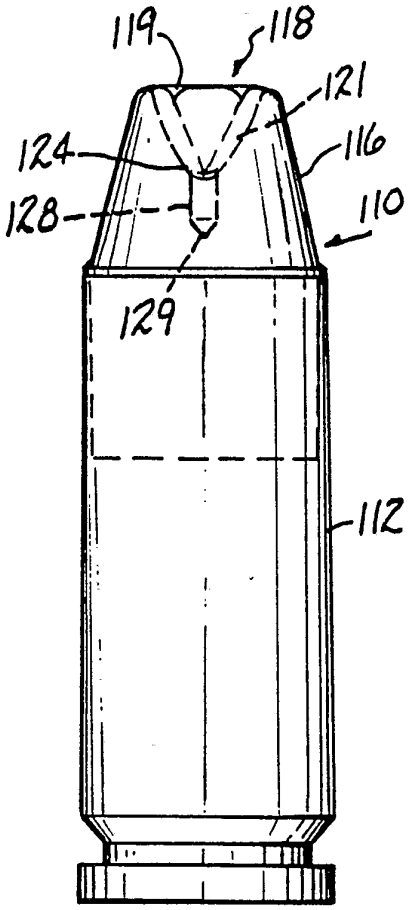

FIG-8

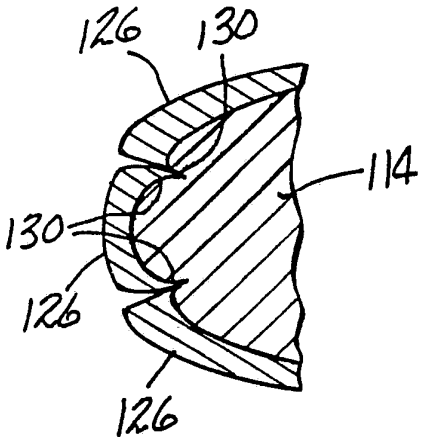

FIG-11

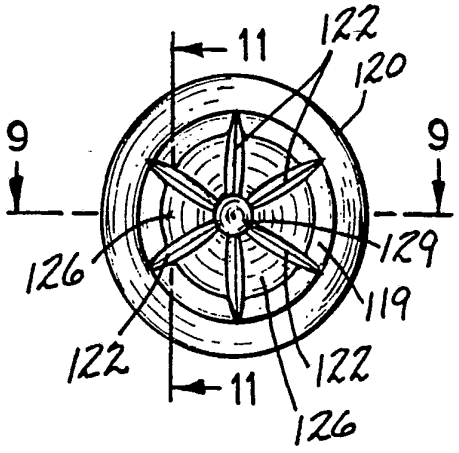

FIG-10

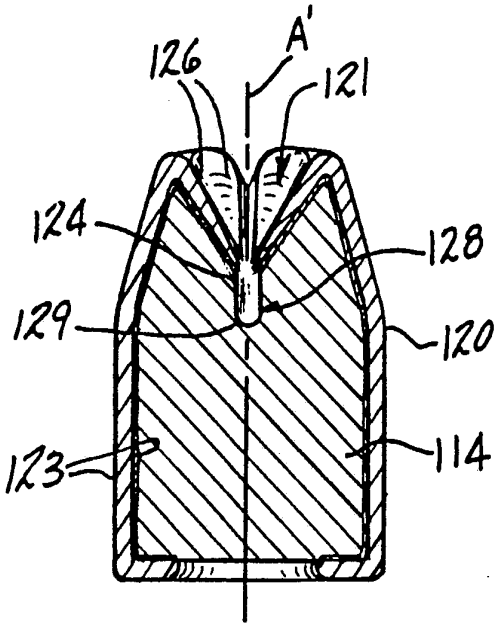

FIG-15

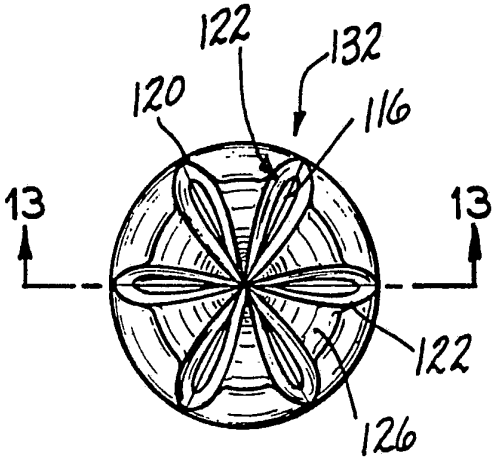

FIG-12

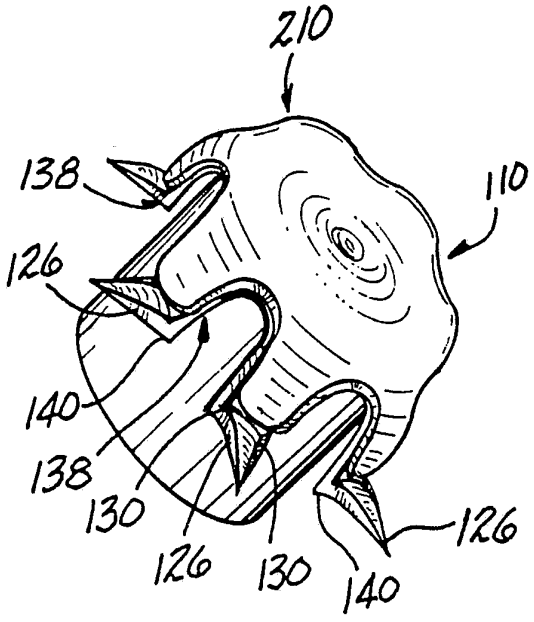

FIG-14

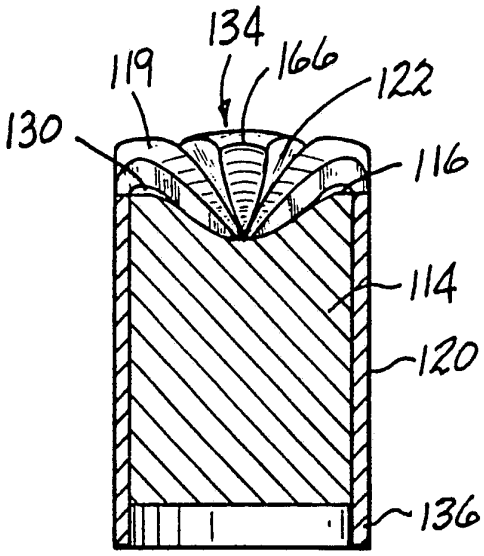

FIG-13

INTERNATIONAL SEARCH REPORT

International application No.
PCT/US93/02336

A. CLASSIFICATION OF SUBJECT MATTER

IPC(5) :F42B 12/34
US CL :102/509
According to International Patent Classification (IPC) or to both national classification and IPC

B. FIELDS SEARCHED

Minimum documentation searched (classification system followed by classification symbols)

U.S. : 102/507,508,510,514,515,516,517

Documentation searched other than minimum documentation to the extent that such documents are included in the fields searched

Electronic data base consulted during the international search (name of data base and, where practicable, search terms used)

APS TEXT

C. DOCUMENTS CONSIDERED TO BE RELEVANT

Category*	Citation of document, with indication, where appropriate, of the relevant passages	Relevant to claim No.
A	US, A, 2,327,950 (WHIPPLE) 24 August 1943.	
A	US, A, 3,120,188 (KREWZER) 04 February 1964.	
A	US, A, 3,157,137 (BURNS, JR.) 17 November 1964.	
A	US, A, 3,349,711 (DARIGO ET AL.) 31 October 1967.	
A	US, A, 4,044,685 (AVCIN) 30 August 1977.	
A	US, A, 4,550,662 (BURCZYNSKI) 05 November 1985.	

[X] Further documents are listed in the continuation of Box C. [ ] See patent family annex.

* Special categories of cited documents:

"A" document defining the general state of the art which is not considered to be part of particular relevance

"E" earlier document published on or after the international filing date

"L" document which may throw doubts on priority claim(s) or which is cited to establish the publication date of another citation or other special reason (as specified)

"O" document referring to an oral disclosure, use, exhibition or other means

"P" document published prior to the international filing date but later than the priority date claimed

"T" later document published after the international filing date or priority date and not in conflict with the application but cited to understand the principle or theory underlying the invention

"X" document of particular relevance; the claimed invention cannot be considered novel or cannot be considered to involve an inventive step when the document is taken alone

"Y" document of particular relevance; the claimed invention cannot be considered to involve an inventive step when the document is combined with one or more other such documents, such combination being obvious to a person skilled in the art

"&" document member of the same patent family

Date of the actual completion of the international search	Date of mailing of the international search report
28 APRIL 1993	16 JUN 1993
Name and mailing address of the ISA/US Commissioner of Patents and Trademarks Box PCT Washington, D.C. 20231	Authorized officer HAROLD TUDOR NGUYEN NGOC-HO INTERNATIONAL DIVISION
Facsimile No. NOT APPLICABLE	Telephone No. (703) 308-0497

Form PCT/ISA/210 (second sheet)(July 1992)★

INTERNATIONAL SEARCH REPORT

International application No.
PCT/US93/02336

C (Continuation). DOCUMENTS CONSIDERED TO BE RELEVANT

Category*	Citation of document, with indication, where appropriate, of the relevant passages	Relevant to claim No.
A	US, A, 4,610,061 (HALVERSON) 09 September 1986.	
A,P	US, A, 5,101,732 (SCHLUCKEBIER) 07 April 1992.	
A	GB, A, 17,996 (BERTIE-CLAY) 04 June 1898.	
A	GB, A, 4426 (GABBETT-FAUFAX) 29 April 1899.	