US 20090056258A1

(19) United States

(12) Patent Application Publication

Currier

(10) Pub. No.: US 2009/0056258 A1

(43) Pub. Date: Mar. 5, 2009

(54) FORMING APPARATUS AND SYSTEM

(76) Inventor: **Donald W. Currier**, Houston, TX (US)

Correspondence Address:
DONALD W. CURRIER
1806 MILLWOOD DR.
HOUSTON, TX 77008-1149 (US)

(21) Appl. No.: **11/845,921**

(22) Filed: **Aug. 28, 2007**

Publication Classification

(51) **Int. Cl.**
E04G 11/08 (2006.01)
E04B 2/86 (2006.01)

(52) **U.S. Cl.** **52/348**; 52/649.1; 52/745.09

(57) **ABSTRACT**

A forming system is provided for retaining a conformable material. The conformable material is, in one embodiment, concrete. The forming system includes one or more forming members, some comprising at least two panels connected in spaced relation so as to define a substantially linear passageway adapted to retain a first supply of concrete. In other embodiments, the forming member may comprise one or more panels forming various configurations so as to define substantially non-linear passageways or an end forming member to retain a conformable or settable material such as concrete which hardens in place. Each of at least two panels of the forming member further preferably comprises at least one interconnectable end defining an interconnectable element. The at least one interconnectable end, in some embodiments, forms an interengageable slot with the interconnectable element adapted to be interconnectable with at least one other structure. The one other structure, in some embodiments, comprises one or more forming members being configured similarly. Additionally, the at least two panels, in one embodiment, are preferably adapted to be disconnectable after use to subsequently receive a second supply of conformable material.

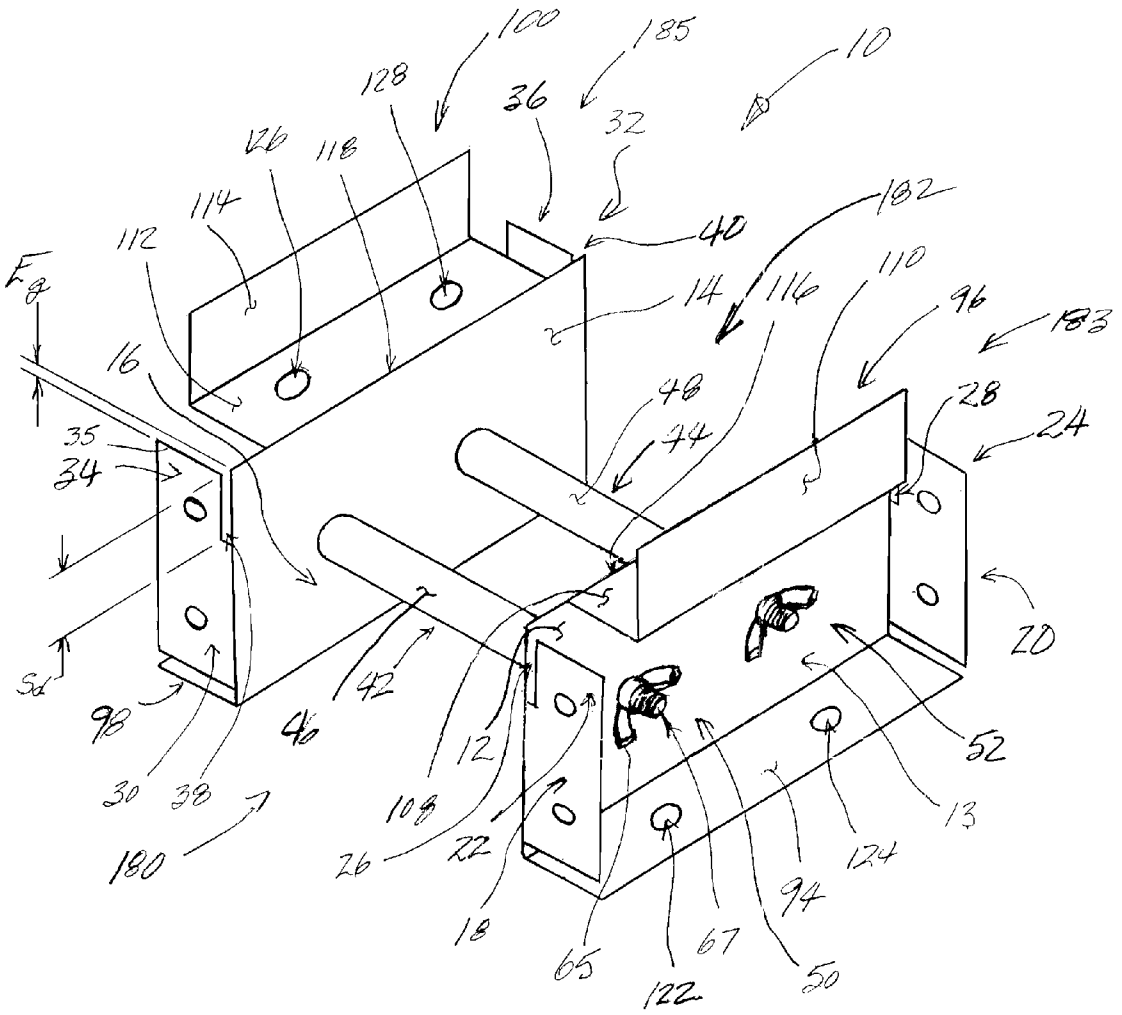

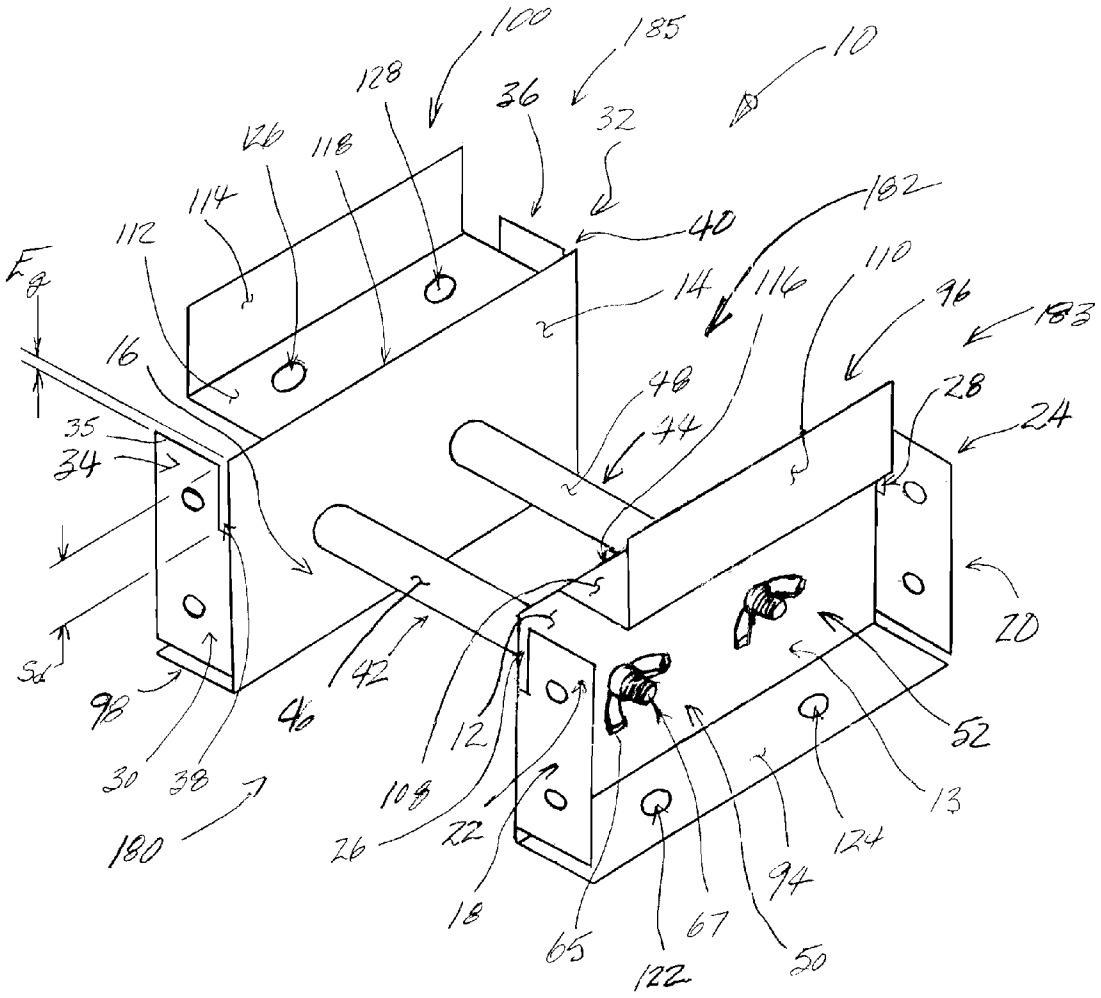
100
185
10
128
36
32
126
118
114
112
40
182
14
116
110
96
183
16
48
28
24
35
34
44
20
56
98
42
46
12
52
30
38
108
13
180
26
22
124
94
18
65
67
50
122

FIG. 1

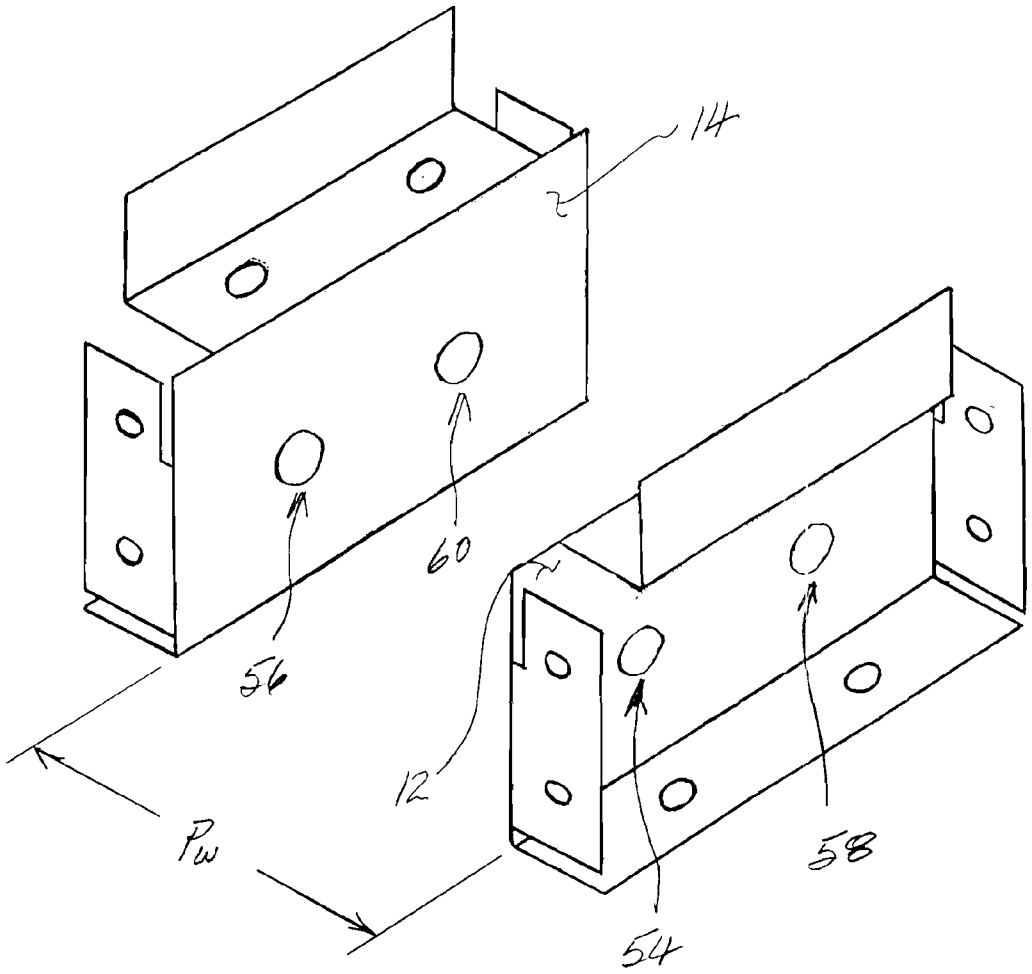

FIG. 2

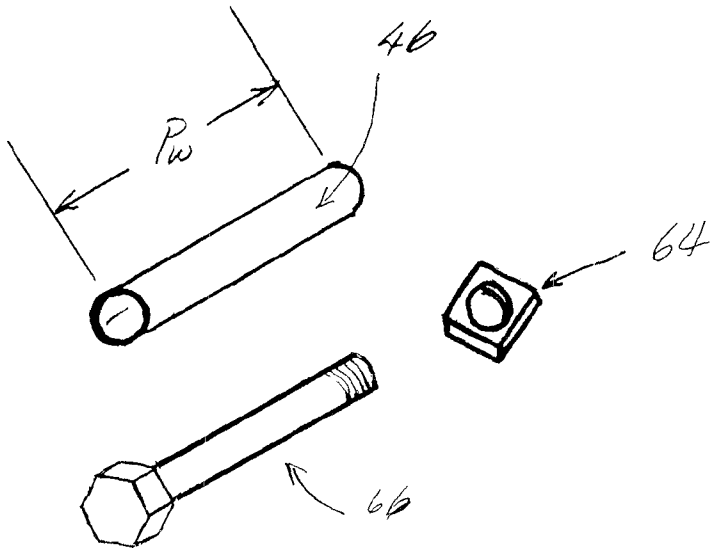

FIG. 3

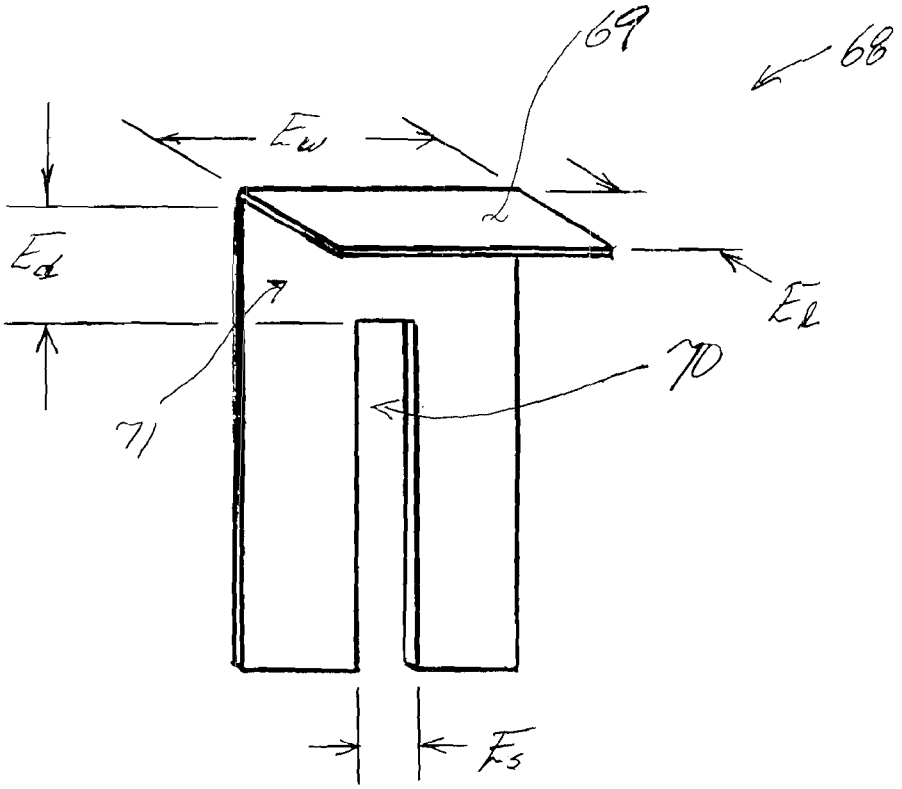

FIG. 4

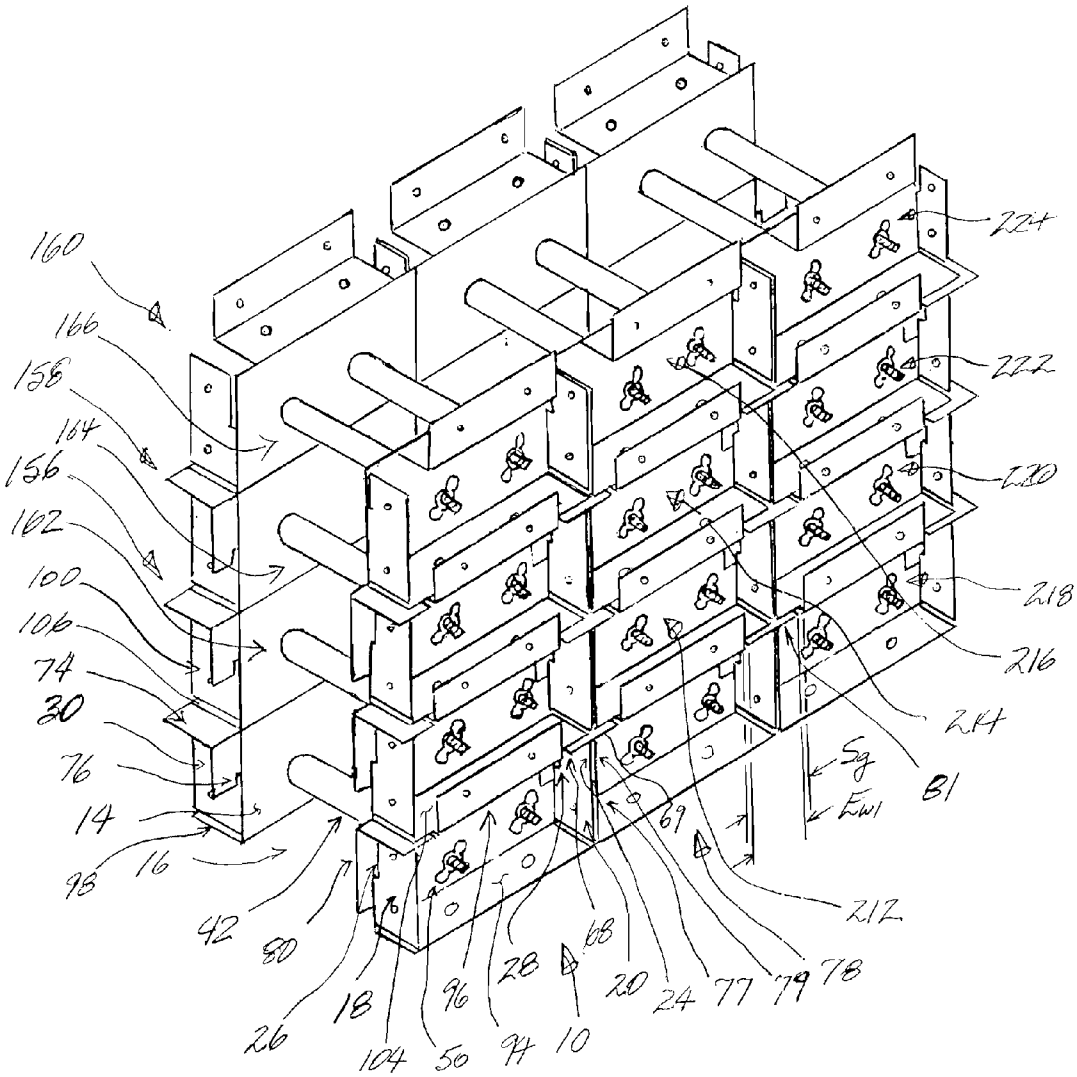
160
166
158
164
156
162
100
106
74
30
76
14
98
16
42
80
26
18
104
50
96
94
28
10
68
20
24
77
79
78
69
212
81
214
216
218
220
222
224
Sg
Ewl

FIG. 5

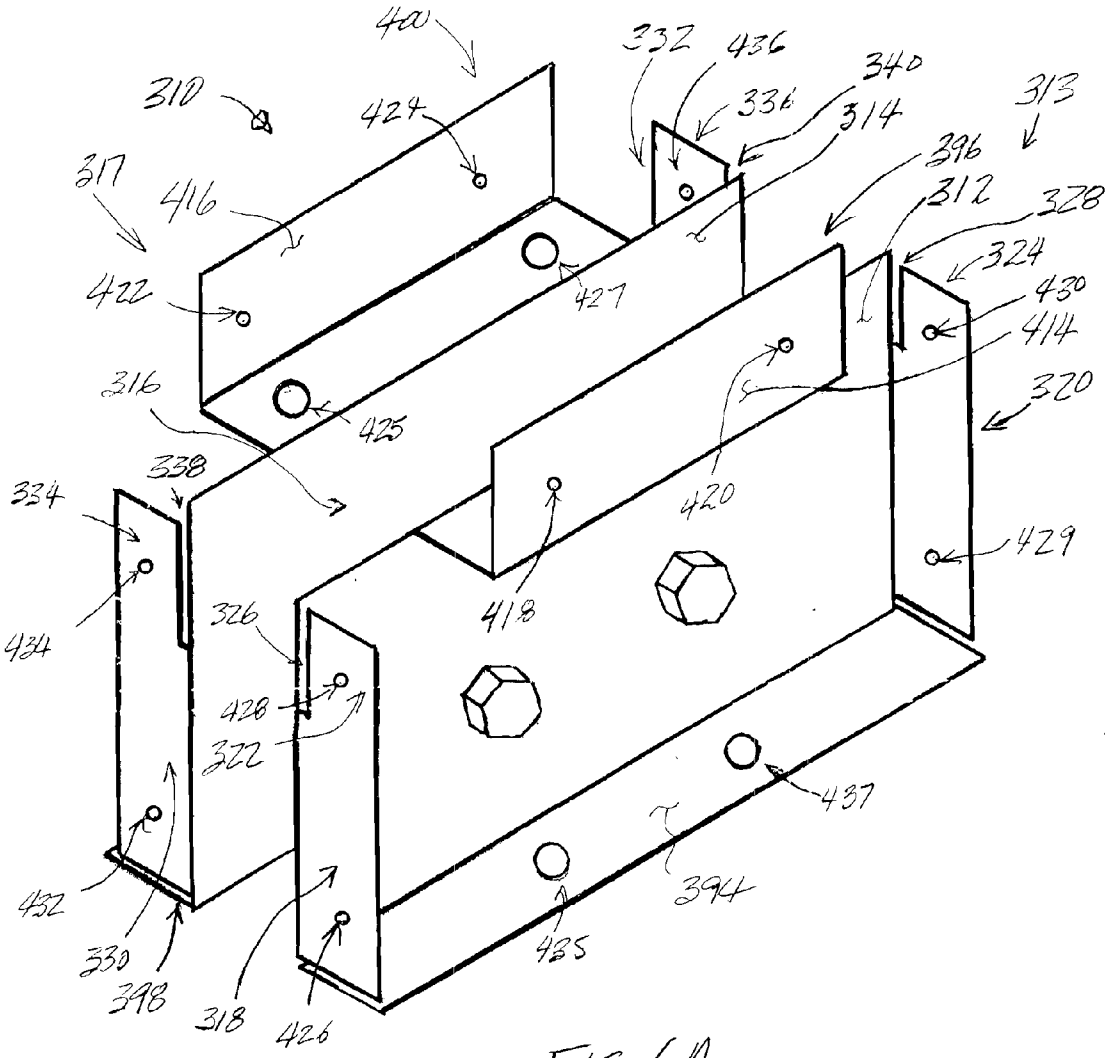
400
310
424
332
436
340
336
314
313
317
416
396
312
328
324
422
427
430
414
316
425
320
338
334
420
429
418
434
326
428
322
437
432
394
330
398
318
426
435

FIG. 6A

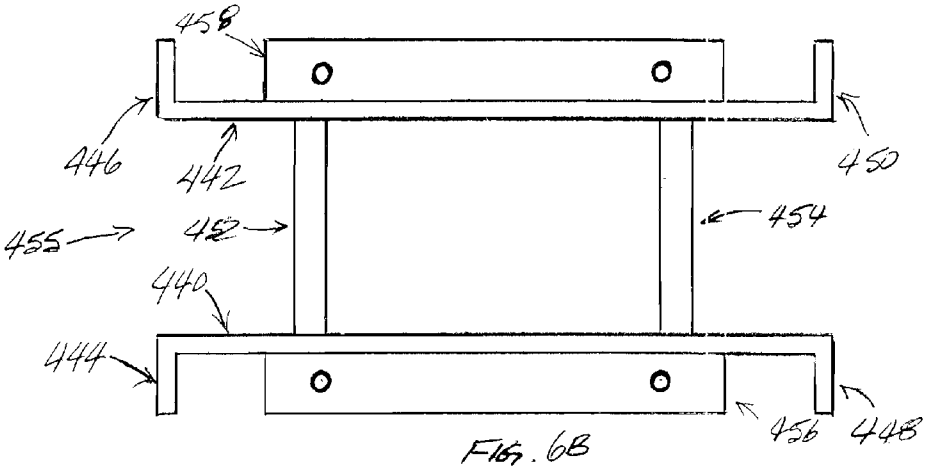
458
446
442
450
455
452
454
440
444
456
448

FIG. 6B

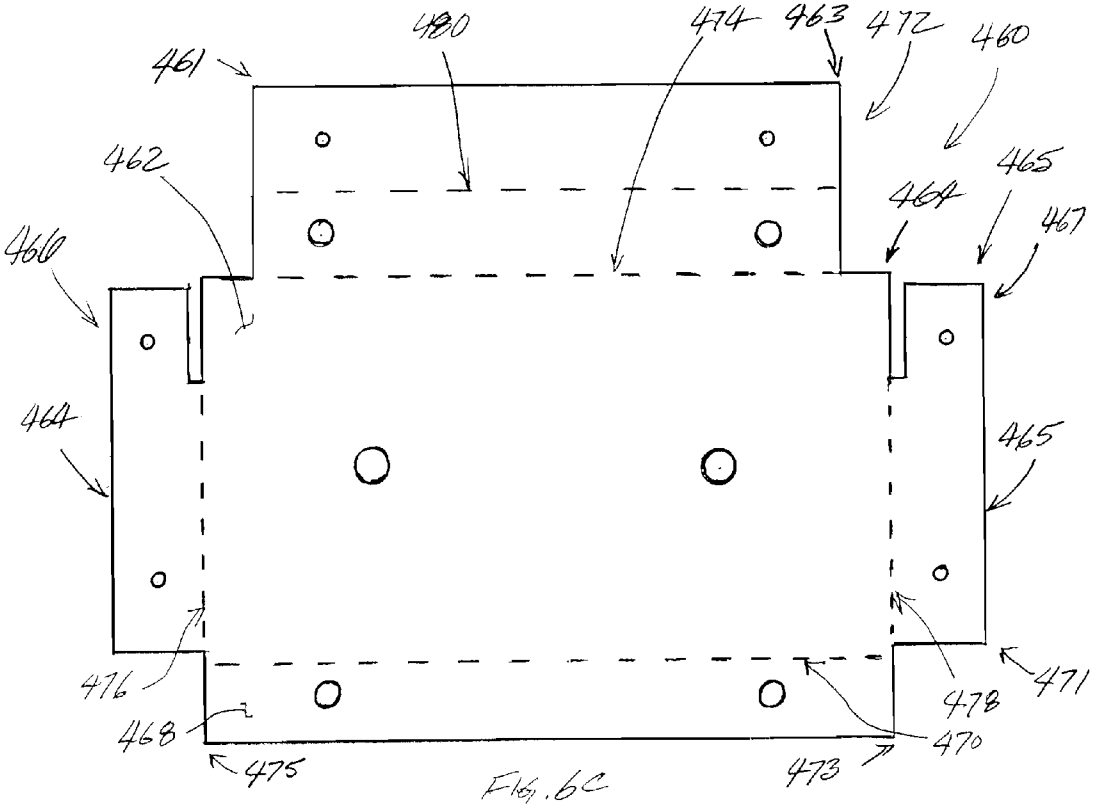
480
474
463
472
460
461
462
464
465
467
466
464
465
476
478
471
468
470
475
473

FIG. 6C

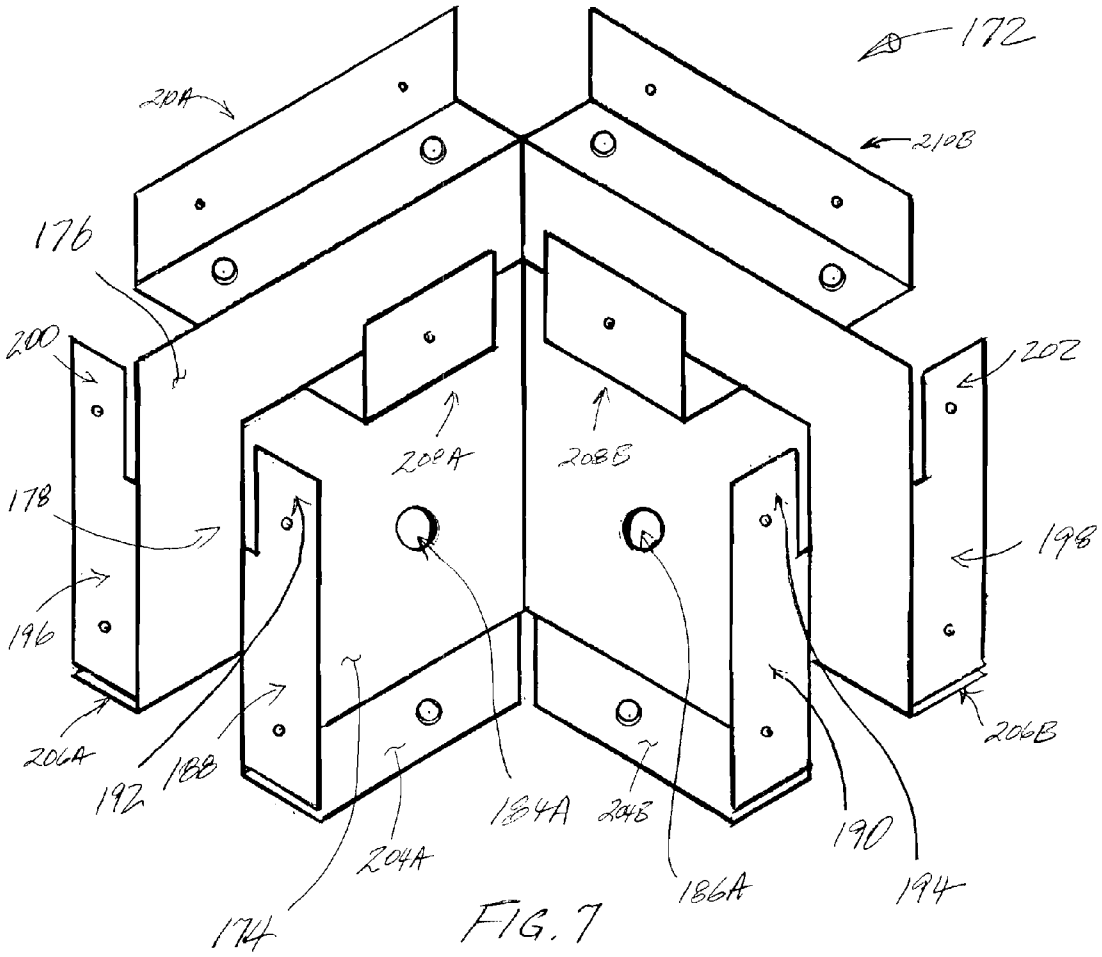
172
210A
210B
176
200
202
208A
208B
178
198
196
206A
206B
192
188
184A
204B
190
204A
186A
194
174

FIG. 7

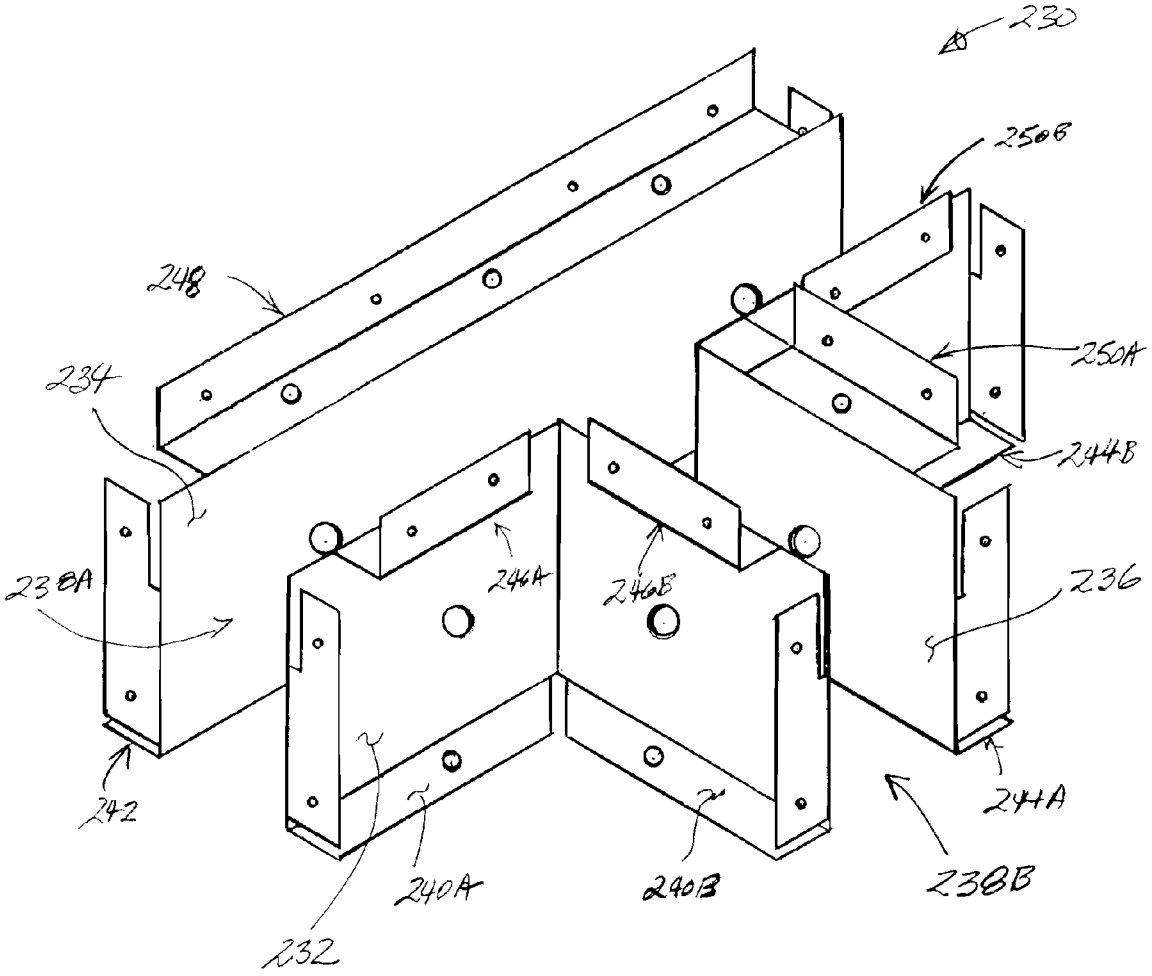
230
250B
248
250A
234
244B
238A
246A
246B
236
242
244A
240A
240B
238B
232

FIG. 8

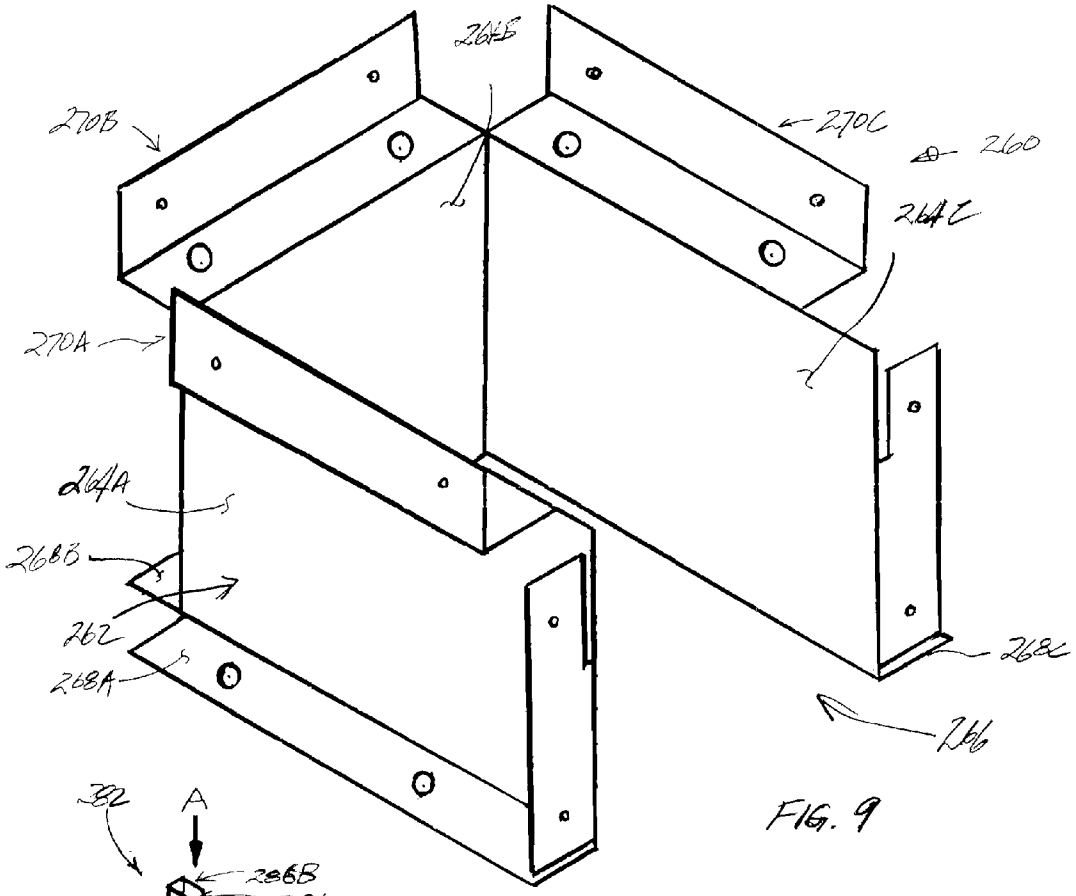
264E
270B
270C
260
264C
270A
264A
268B
262
268A
268C
266

FIG. 9

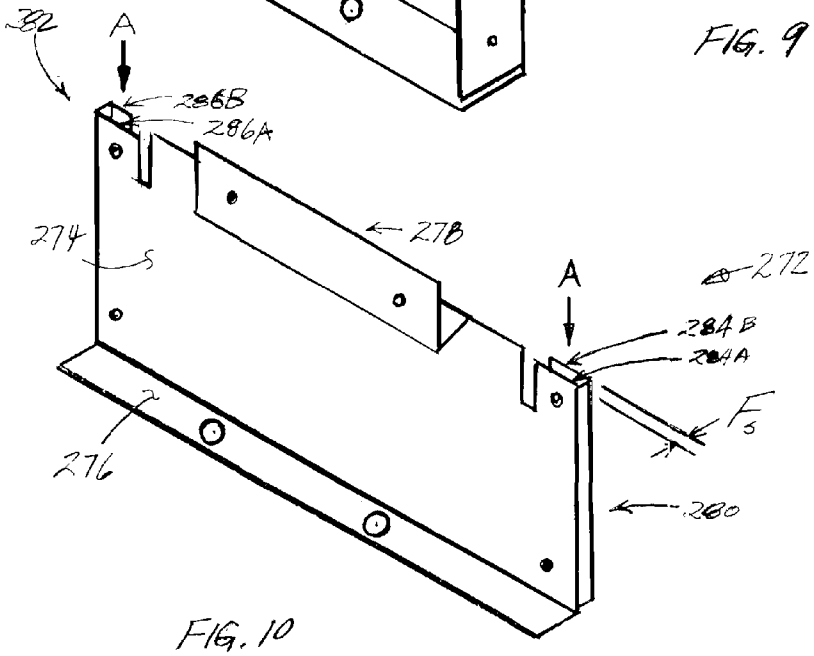
282
A
286B
286A
274
278
A
272
284B
284A
F_s
276
280

FIG. 10

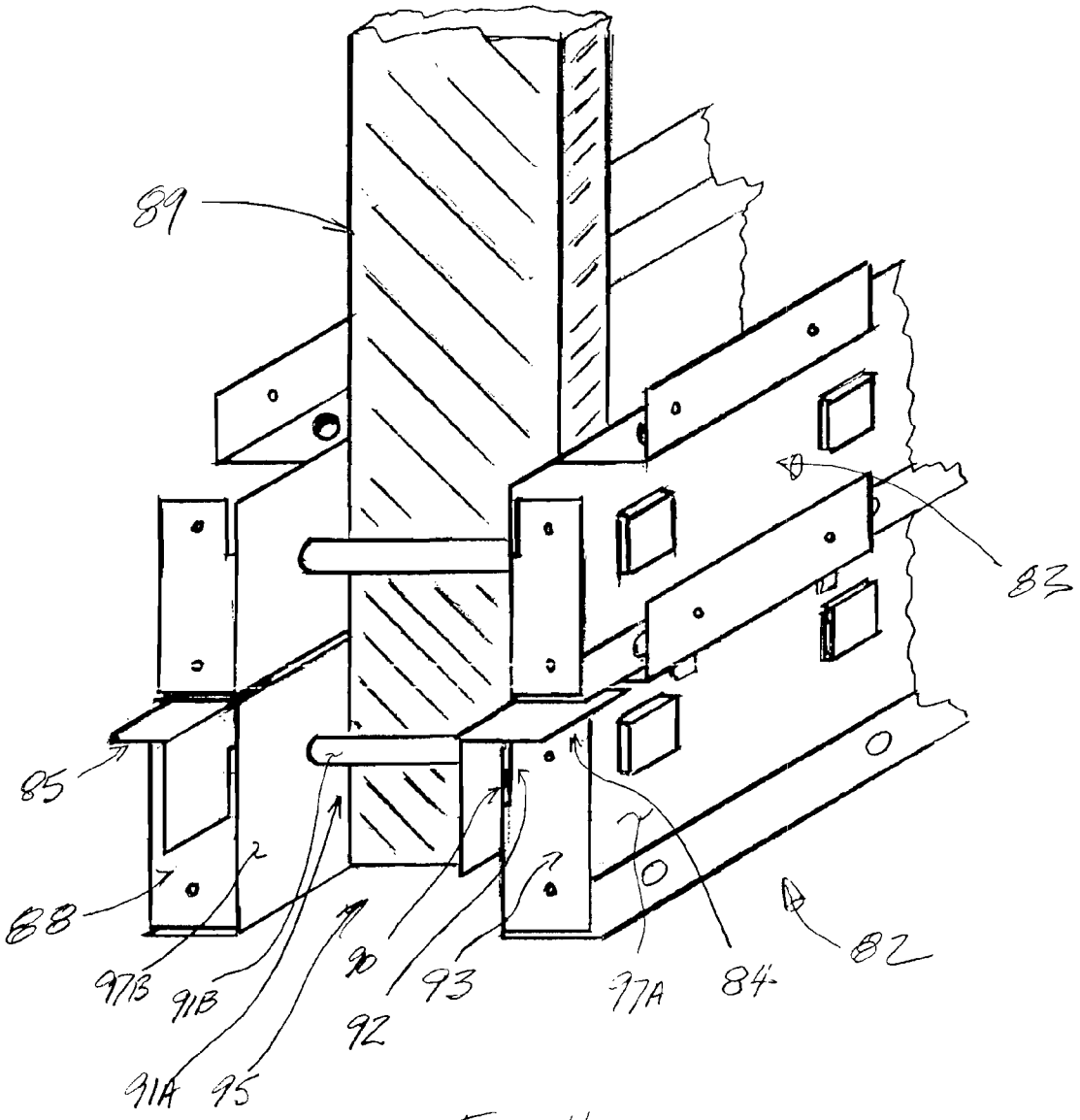

FIG. 11

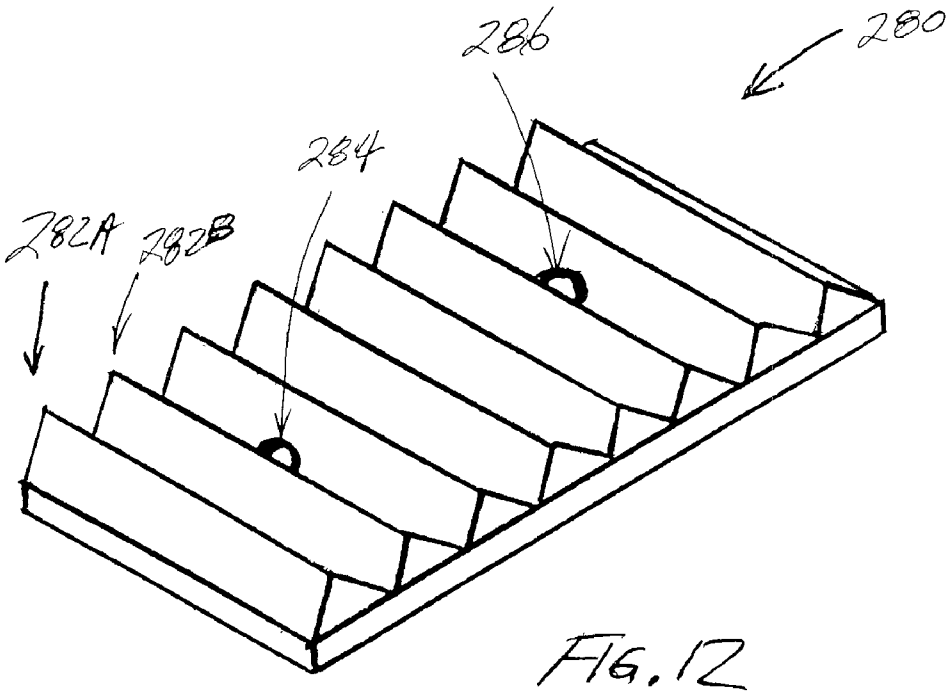

FIG. 12

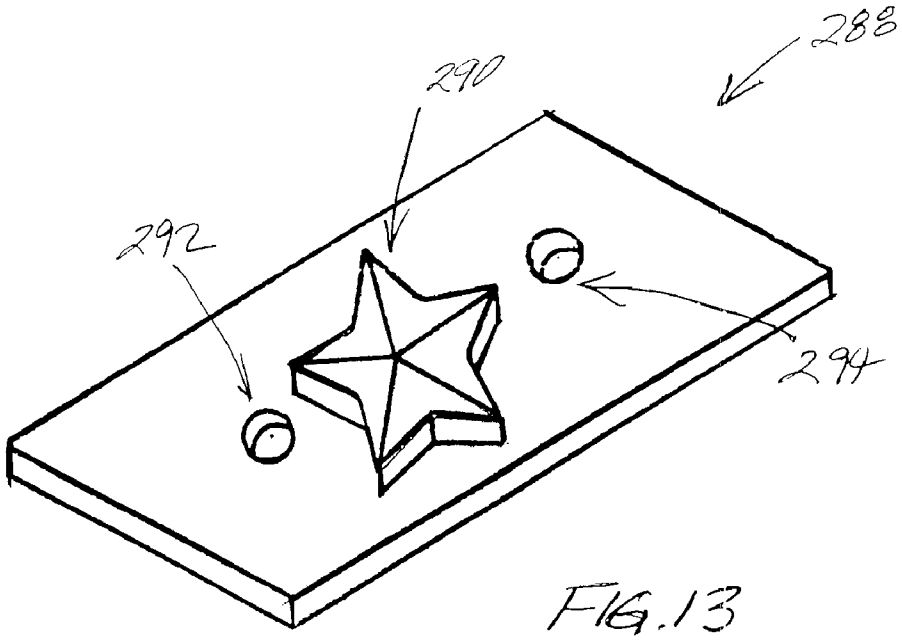

FIG. 13

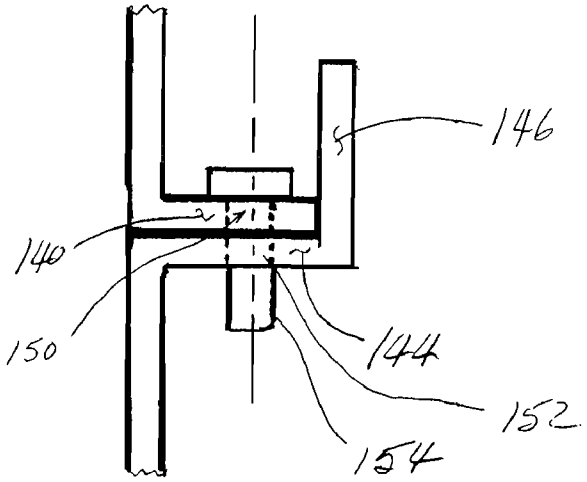
146
140
150
144
152
154

FIG. 14

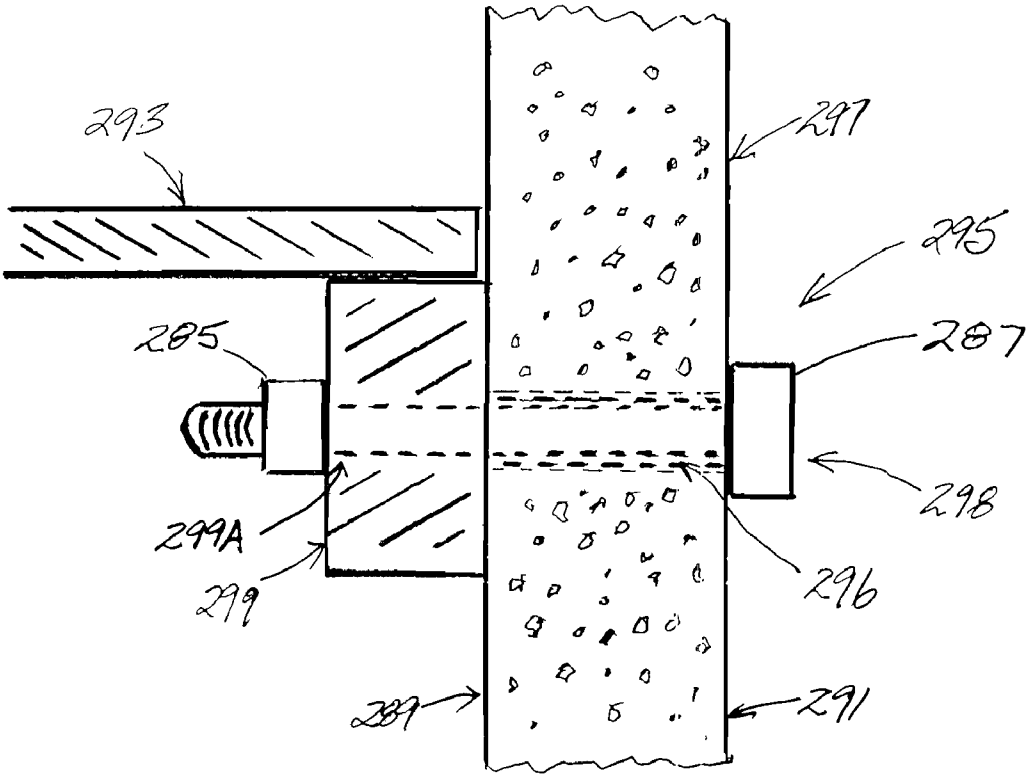
293
297
295
285
287
298
299A
299
296
289
291

FIG. 15

FORMING APPARATUS AND SYSTEM

FIELD OF THE INVENTION

[0001] The present invention relates generally to an apparatus, system and method for forming a material, and more particularly, to an apparatus, system and method for forming a conformable material, such as, for example, concrete.

BACKGROUND OF THE INVENTION

[0002] In the construction industry, numerous techniques, methods, and devices are available for building structures out of a variety of materials using different structural systems. Some construction methods use, for example, "wood frame walls"; others use "concrete block walls." Many of these structural systems and construction methods, however, require time-consuming, heavy and cumbersome "component-by-component" construction—with relatively difficult to handle components (e.g., boards, concrete blocks, etc.). Moreover, these components must be secured together in some manner (e.g., nails, mortar, etc.) and typically require skilled, experienced labor.

[0003] Building a "concrete block wall," for example, requires specialized masonry skills to properly handle and align blocks and apply mortar to join and secure the concrete blocks so as to form a uniform, vertically and horizontally aligned block wall; such specialized labor adds to the cost and time of a construction project.

[0004] In contrast to a "concrete block wall," a poured concrete wall in many instances produces a stronger, longer-lasting wall, which provides more desirable sound and weather-resistant qualities. A poured concrete wall is effectively one solid structure while a "concrete block wall"—which in effect requires handling each cumbersome concrete block—is constructed, as noted, block-by-block with mortar for example. A solidly constructed poured concrete home would also provide durability and many other advantages typically needed where there is exposure to hurricanes, tornados or other harsh weather conditions. Additionally, unlike a "wood frame wall," such a structure also is resistant to termites.

[0005] Various methods and devices for building concrete walls include, for example, first erecting forms usually consisting of several parallel walls which form a space therebetween for receiving and holding concrete. Such devices also usually require substantial alignment and bracing prior to pouring concrete. Once the poured concrete wall has fully cured, the forms may be removed.

[0006] Unfortunately, many of these processes and devices have drawbacks in that they utilize forming walls, complicated shoring reinforcements and alignment devices that are unwieldy, heavy, and require extensive effort and expense to transport to and from a construction site. Due to their weight and bulkiness, many of these form devices require large equipment to handle and position them during the set up and forming process—thus making them time-consuming and cumbersome to use prior to actually being able to pour concrete. Moreover, such hefty and awkward devices leave even fewer options for less-muscle bound individuals or elderly persons with certain ailments who desire—on their own—to set up and handle forms so as to form up some structure, building or the like.

[0007] There are also other types of forming systems—which are not reusable and remain permanently affixed to the building. Such systems typically include insulating features and also incorporate insulating materials and multi-layered forms having built in insulation. Unfortunately, these systems may be unnecessarily labor-intensive and may be too complex to efficiently use for many building structures thus driving up the effort and cost of a construction project. And, again, they can require specialized labor or training.

[0008] In addition, although some multiple form devices are reusable, these forms are not easily and quickly removable—especially when multiple adjacent forms are interconnected next to and/or stacked on one another using time-consuming, threaded fasteners.

[0009] The following U.S. patents disclose a variety of systems and devices, which have attempted to resolve at least some of the above problems:

[0010] U.S. Pat. No. 6,405,505 to Alberti, entitled "Modular interlock wall form," sets forth a modular interlock wall form for providing a sturdy wall structure that is easily assembled and disassembled. The modular interlock wall form includes a base frame for resting on a surface, and which includes a pair of elongate base rails extending in the longitudinal direction of the base frame. The base rails are laterally spaced, and at least one lateral member extends laterally across the base rails. The lateral member has a fascia support portion extending substantially perpendicular to an axis of a central portion of the lateral member. A face panel is provided for forming a face of the modular interlock wall form. The face panel has opposite surfaces and a perimeter edge. The perimeter edge comprises opposite end edges and opposite first and second edges. The first edge is adapted for being oriented downwardly and the second edge is adapted for being oriented upwardly.

[0011] The second edge has a tongue extending along the length of the second edge with at least one pocket recessed in the tongue. The first edge has a groove extending along the length of the first edge, and is also adapted to receive one of the base rails of the base frame and is adapted to receive the tongue of the first edge. The end edges also have grooves formed therein. A linking frame is provided for linking spaced tiers of face panels together. The linking frame comprises a pair of linking members extending in the longitudinal direction of the linking frame, and at least one spanning member extending laterally across the linking members. The spanning member is coupled to each of the linking members.

[0012] U.S. Pat. No. 6,363,683 to Moore, Jr., entitled "Insulated concrete form," discloses an insulated concrete structure including at least one longitudinally-extending side panel and at least one web member partially disposed within the side panel. The web member extends from adjacent the external side of the side panel through and out of the interior surface of the side panel. The first embodiment of the present invention uses opposed side panels that form a cavity therebetween into which concrete is poured and cured. The second embodiment uses a single side panel as a form, onto which concrete is poured. Once the concrete cures on the single side panel, it is used as a tilt-up wall, floor, or roof panel.

[0013] U.S. Pat. No. 6,321,496 to Martin, Jr., entitled "Insulated form assembly for a poured concrete wall," is directed to an insulated form assembly for a poured concrete wall which includes a plurality of insulated forms. Each insulated form includes two generally planar opposing panels, and a plurality of interior segments interconnecting the panels and defining a plurality of passageways. Each panel includes

a vertically extending attachment channel and an attachment member disposed within the attachment channel.

[0014] U.S. Pat. No. 6,178,711 to Laird et al., entitled "Compactly-shipped site-assembled concrete forms for producing variable-width insulated-sidewall fastener-receiving building walls," sets forth generally large, typically eight feet by two inches by ten or sixteen or twenty-four inches, sidewalls for modular concrete forms which are easily, efficiently and economically produced by cutting and by routing sheet-type polymeric material, preferably polyurethane or expanded polystyrene foam. Metal connecting members are produced in standard sizes by cutting and bending sheet steel and/or wire. The sidewalls and connecting members are transported to a building site tightly and compactly in pieces, and then flexibly assembled into precision wall forms at the site with good efficiency at any scale. The wall forms so assembled define a cavity into which reinforcing steel rod, electrical and/or communications conduit, plumbing, etc., may be entered. Concrete is poured into the cavity to create a wall having the form sidewalls as its permanent surfaces. These surfaces have and present visible regularly-spaced sheet steel strips suitable to receive and to engage sheet metal screws for mounting anything, including more sheet-type construction materials such as wallboard or paneling, to the wall. The thickness of the concrete wall is predetermined by the dimensions of its metal sidewall-connecting members, and may easily be varied such as during the fabrication of lower to upper wall courses of a multi-story building.

[0015] U.S. Pat. No. 5,735,093 to Grutsch, Jr., entitled "Concrete formwork with backing plates," is directed to foam forms for use in making a concrete wall that are disclosed together with a method of making the forms. The forms are stackable to form a cavity that receives the concrete. Each form has two identical panels. The panels are molded separately by first placing a structure, consisting of backing plates that will be along one side of the mold, connecting members that will be along the opposite side of the mold and an apparatus that connects the backing plates to the connecting members, in the mold. The mold is then filled with foam which cures and produces a panel with the backing plates, connecting members and apparatus molded into the panel. The molded panels are then shipped to the job site where the forms are assembled. Each form is assembled as follows: The connecting members on one panel are interconnected, by tieing means, to the connecting members on a second panel to provide a form.

[0016] U.S. Pat. No. 4,936,540 to Boeshart, entitled "Tie for concrete forms," sets forth a tie for concrete forms which includes an elongated strap with opposing first and second ends. The strap has an upwardly projecting intermediate portion which prevents the movement of form panels inwardly on one end of the strap. A notch in the first end of the strap receives a waler to hold form panel from moving outwardly along the strap. A fixed plate on the second end of the strap holds a form panel from moving outwardly along the strap. Beveled ends allow the strap to be forced through a polystyrene panel without the need for forming an aperture in the panel prior to insertion of the tie. A tubular spacer may be utilized on intermittent ties to prevent inward movement of the form panels. The spacer has a notch cut therein to allow concrete to flow within the spacer and around the tie.

[0017] U.S. Pat. No. 4,726,560 to Dotson, entitled "Concrete form tie assembly," sets forth a concrete form tie assembly in which the tie rod is formed from a high tensile strength flexible wire member, with the sleeve being formed of a flexible or yieldable material. A short sleeve member is inserted into the spacer sleeve adjacent one end with washer members on opposite ends thereof for retaining on the tie rod member which is provided with spaced protrusions for coaction with the wash members, the tube and washer assembly serving to rigidify the assembly for assisting in insertion and removal of the tie rod and sleeve as a unit. The leading end of the tube and washer assembly may be provided with a conical end to act as a guide. The ends of the tie rod member are enlarged, such as by welding head members thereto, the head members being configured for coaction with conventional hairpin or snap tie wedge members.

[0018] U.S. Pat. No. 3,927,857 to Lovisa et al., entitled "Reusable tie assembly for concrete forms," discloses a retractable, removable and reusable tie assembly for concrete forms which includes a single tie rod having a pipe slidably mounted on one end thereof and an internal spreader system interposed between its ends for spacing the forms a predetermined distance apart during concrete pour. The internal spreader system includes a loose cone adapted to be threadedly engaged with one end of the pipe and a rubber tube adapted to sealingly engage with this cone as well as a second cone secured to the other end of the tube. This connection includes a ferrule and insert engageable with a steel washer embedded in the secured cone. The insert is interiorly threaded to facilitate removal of the cone and attached rubber tube after the forms have been stripped. Interengaging surfaces of threaded insert and the rod assure the proper location of the internal spreader system after the first and closing form have been erected. Wedges at each end of the tie assembly complete the erection of the forms. After the concrete has been formed and satisfactorily hardened the forms are then stripped. Towards this end, the rod and associated pipe are removed by initially uncoupling one or both of the wedges and then unscrewing the pipe from its associated cone. Thereafter the loose cone may be removed with a suitable tool or bolt with a thread mating with the internal thread of this cone. The other cone and secured tube may then be removed by means of a second tool or bolt having a threaded portion mating with that of the thread of the insert. The tie assembly may then be reused where desired.

[0019] U.S. Pat. No. 3,858,993 to Lovisa et al., entitled "Reusable tie assembly for concrete forms," is directed to a retractable, removable and reusable tie assembly for concrete forms which includes a single tie rod, and an internal spreader and spacing system which includes a sleeve means, the spreader system having built-in provisions for internal spreading and spacing of forms in such a manner as to permit the tie rod to be partially withdrawn on one side of the form facilitating the installation of the closing form, on the opposite side, and then to be inserted to engage and lock with the internal spreader system, thus keeping the two adjacent sides of the forms in a definite predetermined position apart during the concrete pour, then to be removed undamaged from the hardened concrete prior to dismantling of the forms, leaving the internal spreader in the concrete to be removed after stripping of the forms without damaging the internal spreader.

[0020] In addition, several examples of some publications related to building construction methods and devices include the following:

[0021] *Concrete Homes*, October/November 2006, (page 7), shown under the article entitled, "Fox Blocks T-Block now available in 6- and 8-inch sizes" offered through Airlite Plastics.

[0022] *Concrete Homes*, June/July 2006, (page 37), shown under the article entitled, "COMPLEXITY captures CFA award" offered through suppliers for Balmer Brothers Concrete Work, Inc.

[0023] *Concrete Homes House Plans*—2004, (page 9), shown under the article entitled "COUNTING ON CONCRETE" related to, for example, "Insulating Concrete Forms" (page 12), "Removable forms" (page 13), "Precast concrete panels" (page 14), etc.

[0024] http://www.eere.energy.gov/buildings/info/components/envelope/foundation.html (visited Apr. 1, 2007), entitled "Building Technologies Program."

[0025] http://www.cfawalls.org/products/nat_suppliers/index.htm (visited Apr. 1, 2007), entitled "CFN National Suppliers."

[0026] http://www.cfawalls.org/products/nat_suppliers/wallties.html (visited Apr. 1, 2007), entitled "Wall-ties & Forms, Inc."

[0027] http://www.wallties.com/concrete_forms.htm (visited Apr. 1, 2007), entitled "Concrete Form Accessories" related to, for example, "Gang Adapters," "Pins and Wedges," "Waler Brackets," Wall Ties," "Laydown Applications," "Blockouts/Blockdowns," "Special Application Hardware," "Wall Thickness Change," "Concrete Form Stacking," etc.

[0028] http://www.integraspec.com (visited Feb. 26, 2007), entitled "Insulating Concrete Forms—IntegraSpec®"

[0029] http://www.integraspec.com/product.html (visited Feb. 26, 2007), related to, for example, Phil-Insul Corp Product Descriptions for spacers, panels, etc.

[0030] However, in view of the foregoing, there still remains a need for a forming system, method and apparatus including a simple-to-manufacture, configurable forming member which is easy to set up, stack, and remove after the concrete wall is poured and has cured and which has a simple, reusable configuration which is adapted to be more easily and quickly installed, without requiring specialized and experienced skilled labor, so as to enable a person without such specialized training or education to form and build a wall.

[0031] Those of skill in the art will appreciate the present invention which addresses the above problems and other significant problems, the solutions to which are discussed hereinafter.

SUMMARY OF THE INVENTION

[0032] It is one possible objective of one possible embodiment of the present invention to provide an improved method and apparatus for forming and retaining a material such as for example, concrete, to build various structures or for forming other materials.

[0033] These and other objectives, features, and advantages of embodiments of the present invention will become apparent from the drawings, the descriptions given herein, and the appended claims. However, it will be understood that the above-noted objectives of various embodiments are intended only as an aid in understanding aspects of the embodiments, and are not intended to limit the embodiments of the invention in any way, and therefore do not form a comprehensive or restrictive list of objectives, and/or features, and/or advantages of the various embodiments of the invention.

[0034] Accordingly, in one possible embodiment, an apparatus is provided for retaining a conformable material, including at least a forming member comprising at least two panels connected in spaced relation so as to define a passageway adapted to retain a first supply of conformable material which hardens in place, such as, in one embodiment, concrete. Each of the at least two panels of the forming member further preferably comprises at least one interconnectable end defining an interconnectable element. The at least one interconnectable end, in some embodiments, forms an interengageable slot with the interconnectable element adapted to be interconnectable with at least one other structure. The one other structure in a preferred embodiment comprises one or more forming members being configured similarly. Additionally, the at least two panels, in one embodiment, are adapted to be disconnectable after use to subsequently receive a second supply of conformable material, which hardens in place.

[0035] Another possible embodiment further comprises an engagement member forming an interconnection slot. The engagement member is preferably receivable by both an interengageable slot of an interconnectable element of a given forming member and an interengageable slot of an interconnectable element of at least one other forming member, wherein the given forming member and the at least one other forming member may be interconnected.

[0036] In a possible embodiment, a plurality of forming members are selectively configurable and interconnectable in a desired arrangement such that at least a portion of an enclosure may be constructed from the forming members with the forming members defining a plurality of passageways for retaining the conformable material.

[0037] In another possible embodiment, each of the at least two panels further comprises a base flange and a support member. In one embodiment, each of the support members of a given forming member cooperate to alignably receive the base flanges of the at least one other forming member when stacked on the given forming member. In this way, a plurality of stacked forming members would define a wall of forming members defining a plurality of vertically-extending passageways to retain the conformable material. In another embodiment, each of the support members further includes at least a support flange and a guide flange. The guide flanges of the support members are preferably disposed in opposing spaced relation.

[0038] In other embodiments, at least two panels are configured so as to define a passageway having a substantially ninety-degree configuration adapted to retain a conformable material. While in various other embodiments, at least three panels are configured so as to define a passageway having a substantially T-shaped configuration adapted for retaining a conformable material.

[0039] Another embodiment further comprises a contour member being mountable within the passageway with the contour member having a selected surface contour facing the interior of the passageway.

[0040] In another possible embodiment, a forming system is provided for retaining a material with the forming system including at least a forming member comprising at least two panels in spaced relation so as to define a passageway adapted to retain a first supply of settable material. Each of the at feast two panels further comprises a base flange extending from each panel away from the passageway, and a support member on an opposite side from the base flange, with the support member extending away from the passageway. The support

member further comprises a guide member adapted to alignably receive a base flange of another forming member when stacked on the forming member. In this way, the at least two panels are alignable with at least two panels of said another forming panel. The at least two panels are preferably, in some embodiments, adapted to be disconnectable after retaining the first supply of settable material for subsequently receiving a second supply of settable material. In one possible embodiment, the each of the at least two panels comprises at least one interconnectable end defining a securable flange with the securable flange adapted to be interconnectable with a corresponding securable flange of another forming member. The forming system preferably comprises, in some embodiment, an engagement component adapted to interconnect a securable flange of the forming member, with a corresponding securable flange of another forming member. In other embodiments, each of the at least two panels further comprises at least one interconnectable end defining an interconnectable element forming an interengageable slot, with the interconnectable element adapted to be interconnectable with at least one other forming member. In such an embodiment, the forming system further comprises an engagement member forming an interconnection slot, with the engagement member receivable by both an interengageable slot of an interconnectable element of a given forming member and an interengageable slot of an interconnectable element of the at least one other forming member. In this way, the given forming member and the at least one other forming member may be interconnected. Moreover, a plurality of forming members having selected configurations may be interconnected and stacked, and a plurality of walls of forming members may be interconnected so as to form at least a portion of an enclosure. In other embodiments, the forming system also further comprising at least one spacer connector comprising a spacer element and a reusable connector, with the at least one spacer connector adapted to releaseably connect in spaced relation each of the at least two panels of at least one of the forming members. In another embodiment, the at least two panels may be configured so as to define a passageway having a substantially non-linear configuration adapted for retaining a settable material. In other embodiments, at least three panels may be configured so as to define a passageway having a substantially T-shaped configuration adapted for retaining a settable material.

[0041] In another possible embodiment, a unitary structure reusably combinable with other unitary structures to create forms to receive settable material may be provided, which includes at least a panel, at least one integrally formed interconnectable end defining a securable element, a base flange integrally formed at a first peripheral edge of the panel, and a support member integrally formed at a second peripheral edge of the panel. Preferably, the panel, at least one integrally formed interconnectable end, base flange, and support member are of one-piece construction and comprise at least one of sheet metal or plastic.

BRIEF DESCRIPTION OF THE DRAWINGS

[0042] For a further understanding of the nature and objects of various embodiments of the present invention, reference should be had to the following detailed description, taken in conjunction with the accompanying drawings, and wherein:

[0043] FIG. **1** is a perspective view of one possible embodiment of the invention showing a forming member having two panels connected in spaced relation so as to define a passageway for receiving a material.

[0044] FIG. **2** is a perspective view of one possible embodiment of the invention showing a forming member having two panels in spaced relation without a spacer connector.

[0045] FIG. **3** is a perspective view showing a spacer element and a connector of one possible embodiment of the invention.

[0046] FIG. **4** is a perspective view of one possible embodiment of the invention showing an engagement member.

[0047] FIG. **5** is a perspective view of one possible embodiment of the invention showing a plurality of forming members interconnected by a plurality of engagement members and stacked on one another so as to define a wall of forming members.

[0048] FIG. **6**A is a perspective view of another possible embodiment of the invention showing a forming member having two panels connected in spaced relation so as to define a passageway for receiving a material.

[0049] FIG. **6**B is a top view of one possible embodiment of the invention showing a forming member.

[0050] FIG. **6**C is a plan view of one possible embodiment of the invention showing a portion of the forming member integrally formed from a unitary structure.

[0051] FIG. **7** is a perspective view of one possible embodiment of the invention showing a forming member configured so as to define a passageway having a substantially non-linear configuration.

[0052] FIG. **8** is a perspective view of one possible embodiment of the invention showing a forming member configured so as to define a passageway having a substantially T-shaped configuration.

[0053] FIG. **9** is a perspective view of one possible embodiment of the invention showing an end forming member configured to close off a portion of a passageway.

[0054] FIG. **10** is a perspective view of one possible embodiment of the invention showing an end panel configured to close off a portion of a passageway, and further showing one possible embodiment of interconnectable ends with each interconnectable end having interengagable flanges.

[0055] FIG. **11** is a perspective view of one possible embodiment of the invention showing a form object preferably removably captured within a passageway between the panels of two stacked forming members.

[0056] FIG. **12** is a perspective view of one possible embodiment of the invention showing a contour member.

[0057] FIG. **13** is a perspective view of one possible embodiment of the invention showing an example of another contour member.

[0058] FIG. **14** is an elevational side view of one possible embodiment of the invention showing a base flange of one forming member secured to a support member of another forming member by a retaining member.

[0059] FIG. **15** is an elevational side view of one possible embodiment of the invention showing a support connector having a portion insertable through a spacer element captured within a formed wall.

[0060] While the present invention will be described in connection with various example embodiments, it will be understood that it is not intended to limit the invention to

those embodiments. On the contrary, it is intended to cover all alternatives, modifications, and equivalents included within the spirit of the invention.

GENERAL DESCRIPTION OF EMBODIMENTS OF THE INVENTION

[0061] One possible preferred embodiment of the present invention effectively provides a system of easy to manufacture reusable forming members that can be used by a person (with or without specialized skills) to inexpensively and quickly build, for example, a concrete building or structure of various desired dimensions using locally available persons and materials. The system is especially ideal for use in regions or countries where there is a lack of skilled construction workers and a need for housing.

[0062] The same set of relatively inexpensive forms can be used—and reused—to build many types of houses or buildings having a variety of layouts and designs. The system is also ideal for implementing the "do-it-yourself" projects of homeowners, landowners, and the like who have some time, but little actual construction experience, and who wish to save money while effectively and quickly building a desired structure, building, shed, retaining wall, footing, or the like—or tying into or replacing an existing wooden wall or other structure. A possible embodiment of the present invention may comprise quite lightweight forming members which are easy to set up, stack, remove, and reuse after a concrete wall has been poured and has cured.

[0063] Now referring to all of the drawings, and more particularly to FIG. **1**, there is shown one possible embodiment of the present invention comprising a forming member **10** adapted for retaining a material. Forming member **10** may preferably include at least two panels **12**, **14** connected in spaced relation so as to define a passageway **16** adapted for retaining a material which is ideally conformable. In one possible embodiment, the passageway **16** may be adapted to retain a first supply of conformable material, which hardens in place. The conformable material may include concrete or any other material that can be poured, for example, into passageway **16** between the panels **12**, **14**.

[0064] If concrete is not available, then locally available materials such as mud, straw, shells, and the like may also be utilized. Other materials such as foam plastic, other fluid substances or any pourable medium may be utilized. Rebar or reinforcement wires or fibers may also be easily inserted into the pourable medium, or prior to pouring, as will be explained further.

[0065] Moreover, in view of the above, it should be noted, that the forming member and system is also modular, compactable, and portable—as well as selectively configurable—so as to be used for less heavy-duty applications and adapted, for example, to selectively create, design and form up a playhouse, fort, dollhouse, theater prop or other such structure using a light-weight, conformable material such as a suitable cellular foam material or the like (which could be readily poured—or blown—into the selectively formed up passageways).

[0066] In a possible embodiment, panel **12**, as shown in FIG. **1**, may include two interconnectable ends **18**, **20**. Each interconnectable end **18**, **20** may define an interconnectable flange or other interconnectable element **22**, **24**. Each of the interconnectable elements **22**, **24**, in one example embodiment, may, for instance, define, form, and/or comprise an interengageable slot **26**, **28**, respectively.

[0067] In the same way, panel **14** may also include two interconnectable ends **30**, **32**. Each interconnectable end **30**, **32** may also define an interconnectable flange or other element **34**, **36**, and each of the interconnectable elements **34**, **36**, in one example embodiment, may, for instance, define, form, and/or comprise an interengageable slot **38**, **40**, respectively. Thus, for example, each interconnectable element **22**, **34** (at end **180** of forming member **10**) and/or interconnectable element **24**, **36** (at end **182** of forming member **10**) may be adapted to be interconnectable with at least one other structure.

[0068] The modular forming member **10**, shown in a "non-interconnected" mode in FIG. **1**, comprises various features for use in an "interconnected" mode with, for example, various other forming members, as will be explained further hereinafter.

[0069] In one possible embodiment, each of the at least two panels **12**,**14** may further comprise at least one interconnectable end defining an interconnectable or other securable element forming an interengageable slot. The interconnectable or other securable element may preferably be adapted to be interconnectable with at least one other structure. For example, in one embodiment, each end (e.g., **180**, **182**) of forming member **10** could be connected to another forming member defining a passageway having a substantially linear configuration similar to forming member **10** as shown in FIG. **1**. However, in other embodiments of the present invention, a forming member could have other linear or non-linear configurations (e.g., angled, curved, arched, irregular, etc.) or other shaped configurations which will be explained hereinafter.

[0070] It will also be appreciated that in one example embodiment, the at least two panels are adapted to be disconnectable after use. With such a configuration, the at least two panels (e.g., panels **12**, **14**) may be adapted to be disconnectable after use to subsequently receive a second supply of conformable material, for example, which hardens in place.

[0071] Each of the panels, interconnectable ends and interconnectable elements is preferably formed from metal or plastic but may be made of any other suitable material having desired properties and characteristics such as for example, sufficient strength and rigidity to withstand shoring or other forces imparted by any of a variety of materials being retained and formed by the forming member (e.g., to prevent possible bulging of the panels).

[0072] Referring still to FIG. **1**, one possible embodiment further comprises at least one spacer connector. However, in a preferred embodiment, two spacer connectors **42**, **44** are preferably used to connect the panels **12**, **14** in spaced relation. Each spacer connector **42**, **44**, in an example embodiment, may preferably comprise a spacer element **46**, **48** and a connector **50**, **52** respectively. The connector is preferably a reusable connector adapted to enable the panels **12**, **14** to be disconnected after use and reconnected for subsequent use. The example connector **50** in FIG. **1** comprises wing nut **65** and a bolt **67** which is selectively sized with a threaded distal end. With such a configuration, each spacer connector **42**, **44** is adapted to releaseably connect the two panels **12**, **14**, respectively, in a selectively spaced relationship.

[0073] Referring now to FIGS. **1**, **2**, and **3**, it can be seen, that in one possible embodiment, two apertures **54**, **58** and **56**, **60** are formed in the panels **12**, **14**, respectively. As can be seen, FIG. **1** shows forming member **10** in an "assembled" mode. FIG. **2** shows forming member **10** without a spacer

connector in a "disassembled" mode. The pair of apertures **54**, **56** and pair of apertures **58**, **60** in panels **12**, **14** are complementary and located so as to line up with one another when installing the "variable-length" spacer connectors **42**, **44** so as to releaseably connect the panels **12**, **14** in spaced relation.

[0074] As can be seen, each multi-function spacer element **46**, **48** serves, in one aspect, to separate and space apart sides **12**, **14** such that passageway **16** therebetween has a desired width (i.e. the distance between sides **12**,**14**). This desired width may vary depending on the application and may be established by the selected length of a spacer element. For example, spacer element **46**, shown in FIG. **3** has a length equivalent to the desired width of the passageway, denoted as P_w. That is, this may be the desired width of the forming member passageways, denoted as P_w, for example as shown in FIG. **2**.

[0075] It should also be recognized that the connector may be any one of various types of reusable, temporary, and/or permanent connectors or fasteners. For example, forming member **10**, in some embodiments, could be permanently connected in an "assembled" mode.

[0076] As illustrated in FIG. **3**, a threaded nut **64** and bolt **66**, in one possible embodiment, as well those described earlier may also be used to releaseably secure panels **12**, **14**. However, at least one end of the connector is preferably a wing nut or other type of fastener end that can be readily tightened or untightened by hand. In other example embodiments, the connector may be adapted for latching or for slotted engagement or other types of threaded engagement, or may include other suitable connectors or fasteners known to a person of ordinary skill in the art. (For example, the connector could comprise an elongated pin having a slotted end adapted to receive a wedge-like member so as to secure the panels in spaced relation, but permit disconnection merely by backing the wedge-like member out of the slot in the end of the connector).

[0077] A spacer connector may be installed, in one possible embodiment, by first positioning a spacer element between the unconnected panels **12**, **14** shown in FIG. **2** and then lined up between complementary apertures **54**, **56** (which preferably have a smaller diameter than the spacer element to prevent the spacer connector from passing through the apertures). A connector is then passed (in either direction) through the complementary apertures, and a fastener element is, in one embodiment, screwed onto the threaded end of the connector and tightened to secure the panels in a desired spaced relationship.

[0078] As noted, the spacing between the panels generally depends on the desired thickness of the resulting formed wall. If a builder desires, for example, to pour a concrete wall having the actual width of a 2×4 (e.g., about 3½ inches), the builder may use a spacer element having substantially the same width as a 2×4. Of course, a spacer element could be selectively sized to space the panels apart at any desired width (e.g., 2×6, 2×8, 4 inches, 8 inches, etc.).

[0079] In one possible embodiment, prior to assembly of the forming member **10** (already shown assembled in FIG. **1**), the spacer element **46** (of a disassembled spacer connector **42**) would be positioned between the apertures **54**, **56** shown in FIG. **2**. Then, bolt **67** having a threaded end and a suitable length would be inserted, for example, through aperture **56** of panel **14**, through the hollow spacer element **46** (being held between the apertures **56**, **54** in the panels), and then finally through the complementary aperture **54** of panel **12**. The threaded end of bolt **67** would then be secured with wing nut **65**. The same procedure may be repeated to install the second spacer connector **44** (if needed, as will be explained further). In this way, the spacer connectors (e.g., **42**, **44**) are adapted to releaseably connect panels **12**, **14** in a predetermined selected spaced relationship depending on the desired thickness of the formed wall.

[0080] It should be noted that if only one spacer connector is desired for use with a forming member, any other unused apertures in the panels can be plugged or sealed. Moreover, the panels can also be configured with only one aperture each and positioned as desired. In other embodiments, a forming member may be configured with no apertures and not held in spaced relation by a spacer connector—but instead by securing the interconnectable ends to another structure (or to adjacent forming members as will be explained further hereinafter).

[0081] Turning again to FIG. **1**, in one possible embodiment of the present invention, the interconnectable ends (for example, **18**, **30**) of forming member **10** may be adapted to be interconnected to at least one other structure as noted. More particularly now in FIGS. **1**-**5**, and as best shown in FIG. **5**, in a possible embodiment of the present invention, the at least one other structure may comprise, for example, at least one other forming member **78**. Forming member **10** is shown partly interconnected, while forming member **78** is shown in an "interconnected" mode with forming members **10** and **218** at the other end.

[0082] Forming member **78** is preferably interconnectable with forming member **10** at one end, by engagement member **68**, forming an interconnection slot **70**, and is interconnectable to forming member **218**, at the other end, by similarly configured engagement member **81** (see FIGS. **4** and **5**). As shown in FIGS. **1** and **5**, the engagement member **68** is receivable by both an interengageable slot **28** of an interconnectable element **24** (see FIG. **1**), and an interengageable slot (not shown) of interconnectable element **79** of forming member **78** as shown in FIG. **5**. It will be appreciated that the features of the interconnection system, in this embodiment, enable adjacent forming members (e.g., **10** and **78**; **78** and **218**; etc.) to be easily and quickly interconnected without the need for multi-component fastening systems or time-consuming threaded fasteners. Also, it should be recognized that although FIG. **5** shows multiple forming members interconnected as well as stacked, one possible embodiment does not require stacking forming members to form up a desired wall as will be explained further herein.

[0083] To further illustrate an interconnectable feature of the forming system and member using an engagement member, another possible embodiment of the present invention is shown in FIG. **11**. FIG. **11** provides a somewhat different perspective of another forming member **82** having panels **97**A, **97**B and complementary engagement members **84**, **85** (and having other features that will be further explained in subsequent paragraphs). In the view shown, the engagement member **84** forms an interconnection slot **90**. The engagement member **84** is selectively sized and shaped with interconnection slot **90** such that the engagement member **84** is adapted to be received by both the interengageable slot **92** of interconnectable end **93** and an adjacent interengageable slot from another forming member (not shown) which could be connected at a later time. (Preferably, in one embodiment, the slot **90** of the engagement member **84** extends downwardly such that the engagement member **84** is adapted to be received

by upwardly extending interengageable slots (e.g., **92**, etc.) of the forming member **82** and some other forming member which could be interconnected thereto).

[0084] Referring again to FIGS. **1**, **4**, and **5**, in one possible embodiment, it should be recognized that the engagement member is selectively configured with various features for functional cooperation with the interconnectable ends of forming members adapted to be interconnected. That is, in an exemplary embodiment, engagement member **68** (as shown in FIG. **4**) has various features adapted to foster securely interconnecting the slotted interconnectable elements of forming members positioned adjacent one another.

[0085] For example, an engagement member, in one embodiment shown in FIG. **4**, preferably has a width denoted by E_w, a length denoted by E_l, a slot width denoted by E_s, and an unslotted depth denoted by E_d. The forming member in FIG. **1**, in one embodiment, has an interconnectable element (e.g., **34**) with a slot depth as denoted by S_d (shown in FIG. **1**).

[0086] It will be appreciated that in one embodiment, the un-slotted depth E_d, of the engagement member **68** is at least substantially equivalent to the slot depth as denoted by S_d of slot **38** of interconnectable element **34** (as shown in FIG. **1**). In this way, the engagement member is configured to functionally cooperate with the configuration of interconnectable element **34**, such that the unslotted portion **71** of engagement member **68** will be received (slidably in one embodiment) by the interengageable slot **38** of interconnectable element **34**.

[0087] Likewise, the engagement member (shown in FIGS. **1** and **5**) would also be configured to functionally cooperate with another similarly configured forming member having a complementary interconnectable element with an interengageable slot positioned immediately adjacent slot **38**.

[0088] It should also be noted that, in one embodiment, the engagement member (with the slot width denoted by E_s) is adapted to be received by both of the interconnectable ends of immediately adjacent forming members (e.g., see FIG. **5**, slotted elements **24**, **79** of forming members **10**, **78** respectively). With such a configuration, a user could quickly and easily slide the engagement member so as to be received simultaneously by both adjacent interengageable slots—so as to connect the interconnectable ends of each of the forming members. The remaining interconnectable ends could be connected in the same manner. (Note that the geometry and structures shown in the figures are not to scale, do not necessarily depict the actual size of the structures, and may be varied as needed to effect any desired interconnectability between the forming members).

[0089] The interconnection slots of engagement members and the interengageable slots and interconnectable elements and ends of the forming members, in various embodiments, may be suitably sized and shaped to provide a snug or loose interconnection. Also, the engagement member and interengageable slots may be configured for frictional engagement to reduce the possibility of the engagement member disengaging or any undesirable disconnection between the ends of adjacent forming members. In one embodiment, for example, when using the forming system to form out a concrete wall, preferably in most instances, a substantially snug fit will be desired between adjacent forming members so as to avoid unwanted leakage through the seams between adjacent forming members. However, when using the forming system for less viscous materials, a looser fit may be suitable. In addition, in some situations (while retaining and forming certain materials), controlled seepage through the upper and lower portions of the seams between adjacent forming members may be desirable to promote and foster, for example, more uniform curing. Also, a sealer could be used along lateral and longitudinal seams between forming members to minimize leakage (and also to minimize resulting seams in the hardened wall; however, seams may also be shaved off as desired).

[0090] In view of the foregoing, an interconnectable (or securable) element of a "first" forming member may be disposed immediately adjacent an interconnectable (or securable) element of a "second" forming member. An engagement member forming an interconnection slot may be further included with the engagement member receivable by both an interengageable slot of a securable member of the "first" forming member and an interengageable slot of a securable element of the "second" forming member. In this way, the "first" and "second" forming members may be interconnected. Moreover, a plurality of forming members may be simply and easily interconnected next to one another so as to form a plurality of longitudinally extending passageways in communication with one another.

[0091] Turning again collectively to FIGS. **1-5**, and in particular FIG. **1**, in another possible preferred embodiment of the present invention, each of the panels **12**, **14** may further preferably comprise a base flange **94**, **98**, respectively, and a support member **96**, **100**, respectively. With this configuration, the support members of a given forming member are adapted to cooperate to alignably receive the base flanges of another forming member being stacked on the given forming member.

[0092] The support members **96**, **100** (see FIGS. **1** and **5**) of forming member **10**, in one embodiment, are adapted to cooperate to alignably receive the base flanges **104**, **106** of forming member **156** (shown in FIG. **5**) being stacked on forming member **10**.

[0093] In this way, each of the support members of a given forming member may be preferably configured and oriented in opposing relation so as to alignably receive each complementary base flange of another forming member. Such a self-alignment feature fosters easy and simple stacking of forming members and aids in building a more plumb form wall.

[0094] In view of the foregoing, it can be seen in FIG. **5**, that a plurality of stacked forming members would define a wall of forming members (e.g., **10**, **156**, **158**, **160**) defining a plurality of vertically-extending passageways to retain a conformable material.

[0095] It should be noted, however, that with the flexible and configurable design features of the panels **12**, **14**, the panels shown in FIG. **1**, may not comprise (or need) any support members (e.g., **96**, **100**). That is, in some embodiments, the interconnectable forming member may be configured to be used to form a passageway (e.g., horizontally-extending and/or vertically-extending, etc.) to pour concrete to make a "footing," "retaining wall," or other structure. Moreover, the panels of each forming member could be cooperatively and sufficiently sized (as suitably large panels; e.g., 4 ft×4 ft; 4 ft×8 ft; etc.) and interconnected to form up a large wall (heightwise and/or lengthwise)—without the need for stacking other forming members.

[0096] Turning again to FIG. **1**, it will also be appreciated that, in one possible embodiment, each support member **96**, **100** is disposed at least in part proximate a top edge **116**, **118** of a respective panel **12**, **14** with each support member preferably being oriented substantially orthogonal with respect to

its panel. In this way, the panel is, in one embodiment for example, further reinforced to inhibit unwanted flexing while the forming member is retaining concrete or some other material for extended periods of time (e.g., during the curing process). This reinforcing feature also aids in maintaining the overall conformation of a formed up wall of interconnected and stacked forming members (e.g., FIG. **5**) as well as the conformation of the plurality of passageways.

[0097] A support member is preferably integrally formed with its respective panel so as to foster ease of manufacture and to strengthen the panel. However, a given support member can be further strengthened and/or disposed, or for example, connected to the top edge of its respective panel in any of various ways such as by welding, bracketing, bracing, riveting, adhering, or by other reinforcing or connection systems. In addition, if further reinforcement is desired, one or more vertically or otherwise oriented rib structure(s) could be connected between each support member and base flange of a panel and/or one or more horizontally or otherwise oriented spar structure(s) could be connected between each interconnectable end of a panel.

[0098] In one possible embodiment, each of the support members **96**, **100** of the panels **12**, **14** further comprises a support flange **108**, **112** and a guide flange or guide member **110**, **114**, respectively. The guide flanges or members **110**, **114** are preferably disposed in opposing spaced relation and are preferably oriented, at least in one embodiment, substantially orthogonal to the support flanges. In this way, opposing guide flanges of a given forming member are in functional cooperation with each other to reinforceably secure the base flanges of another forming member stacked thereon. In effect, the guide flanges may serve as alignment flanges. (For example, see FIGS. **1** and **5**, forming member **156** stacked on forming member **10**; forming member **158** stacked on forming member **156**; forming member **160** stacked on forming member **158**; etc.). It should also be noted that the guide members could also be flared out at the top edges (or at the bottoms) and inclined with respect to one another with the top edges further apart than the bottom edges to foster stacking.

[0099] In another possible embodiment of the present invention, each of the at least two panels (e.g., **12**, **14**) further comprises a base flange which is extending from each panel away from a passageway of the forming member, and a support member on an opposite side from the base flange with the support member extending away from the passageway. In such an embodiment, the support member further comprises a guide member adapted to alignably receive a base flange of another forming member when stacked on the forming member. In this way, the at least two panels are alignable with at least two panels of another forming panel.

[0100] In addition, it will be appreciated that the engagement member also has design features interoperable with the design features of the multi-purpose interconnectable ends and support members. In one example embodiment, as shown in FIG. **1**, the top edge **35** of interconnectable end **30**, is lower than the top edge **118** of panel **14**. Thus, there is a space or gap as denoted by E_g (see FIG. **1**). As shown in FIGS. **4** and **5** together, flange **69** of engagement member **68** is disposed above the top edges of interconnectable ends **20**, **77**. In one embodiment, flange **69** is adapted to rest on the top edges of and be supported by interconnectable ends **20**, **77** (of forming members **10**, **78**).

[0101] As illustrated in FIG. **5**, the base flanges of forming member **212** (configured in a similar manner as forming member **10** in FIG. **1**) are adapted to be alignably received by the support members of forming member **78**. In addition, a portion of the base flange of member **212** may also, in a possible embodiment, be adapted to be supported by flange **69** of engagement member **68**. With this interoperable configuration, it can now be seen that the interconnectable ends are configured to aid in supporting and reinforcing the flange **69** when forming member **212** is stacked on forming member **78**.

[0102] As best shown in both FIGS. **4** and **5**, another cooperatively functional design feature can be seen. In one possible embodiment, the engagement member **81** (as well as the various other engagement members) has a width denoted by E_{wl}, (see FIG. **5**) adapted to fill in the space denoted by S_g between support members (e.g., of forming members **78**, **218**). In this way, the engagement member is also adapted to better support the base flanges of the form members stacked on it (e.g., **212**, **220**).

[0103] In another example embodiment, at least one aperture is formed in each base flange and at least one complementary aperture is formed in each support member. In a possible embodiment, as shown in FIG. **14**, complementary apertures **150**, **152** are formed in a base flange **140** and a support flange **144**, respectively and are alignable such that a retaining member, fastener or connector or the like is insertable through the aperture **150** of the base flange **140** and the complementary aperture **152** of the support flange **144** to secure the base flange to the support flange. In one embodiment, a retaining member such as pin **154** may be inserted through apertures **150**, **152**, as shown in FIG. **14** to secure alignment of the base flange **140** with respect to the support flange **144**. Such a configuration not only serves to selectively vertically align the stacked forming member—and secure the conformation of the respective passageways—but also aids in reinforcing the connection between the two forming members. Thus, in other embodiments, a guide flange **146** may not be needed.

[0104] In addition, the "multi-purpose" base flange, in one possible embodiment, also provides a stabilizing function. That is, with the base flange flared out or extending preferably substantially perpendicular with respect to the plane of its respective panel—and away from the passageway—the base flange serves as a platform-like structure to stabilize the forming member. Of course, the base flange may also be selectively widened (as well as the complementary support member(s)) to provide further stability. In addition, a forming member can be further stabilized by using the apertures of the base flange with a connector (e.g., nail, spike, connector, fastener, etc.) or the like inserted through the aperture to anchor the base flange to a surface—or another forming member.

[0105] It should also be recognized that various features of the versatile forming system may be selectively configured and dimensioned such that various components operate together to prevent shoring and misalignment when a plurality of interconnected and stacked forming members are being used. For example, the spacer can be enlarged, thickened, reinforced, and/or strengthened to maintain the inner configuration, alignment, and "conformation" of vertically- and horizontally-extending passageways created by a formed up wall of interconnected and stacked forming members.

[0106] In this way, the forming members are adapted to retain and keep concrete or cement for example, in a uniform thickness and height within the passageways—and thus pro-

duce a straight wall, vertically and horizontally. It should be appreciated, that with the configuration of the forming members, the forming members may be stacked directly on one another, or staggered such that any seam that might appear on the wall would also have a staggered, block wall-type appearance.

[0107] In addition, the spacer elements could also include one or more recesses and/or one or more protuberances, outwardly extending lugs, or other features to aid in more firmly tying rebar or the like in a vertical or horizontal manner to aid or to facilitate securing the formed up wall to a foundation, footing, roofing member or some anchoring structure. The spacer elements also may define a groove, aperture, or eyelet sized to complementarily receive rebar securely (with or without tying) in such a way as to provide further reinforcing strength to the formed wall. For example rebar may have a diameter of about one quarter inch or other dimension as required for desired reinforcement characteristics depending on the resulting thickness of, in one embodiment, a concrete wall and the engineering design specifications. The spacer element groove could be sized accordingly.

[0108] The outer surface of the elements or other passageway structures as noted herein may also be textured, coated or treated so as to promote and/or inhibit bonding or the like between such structures and a conformable or settable material (e.g., concrete, etc.). Also, the panels interconnectable ends and/or elements, support members and/or spacer connectors may be formed from a durable, heavier gauge metal depending on the use. For example, the panels may be made from galvanized steel sheets, aluminum, copper, tin, or various other metals depending on the application.

[0109] In view of the foregoing, the forming system effectively provides various interoperable and functionally cooperative reinforcing features, as well as others as noted herein, which foster more snuggly securing together an entire wall or enclosure of interconnected and stacked forming members (e.g., see FIG. **5**, items **10**, **78**, **218**, **156**, **212**, **220**, **158**, **214**, **222**, **160**, **216**, **224**, etc.)—prior to pouring a desired material—and as such, the conformation of the plurality of passageways may be better maintained.

[0110] Referring now to FIGS. **6**A and **6**B, in another possible embodiment, a forming member **310** is shown. It should be appreciated that the size, dimensions and interrelationships of the various features of the forming member **310** may be different than that of forming member **10**. That is, the overall dimensions, size, shape, and other physical features of any given forming member are selectively and flexibly configurable depending on the application the forming is being used for. For example, the spacing between panels **312**, **314** may be configurable so as to form a narrower and/or taller passageway **316**, or alternately a wider and/or shorter passageway. Also, the lengths of the support members **396**, **400** may be shorter relative the lengths of panels **312**, **314**. Other components such as interconnectable ends **318**, **320**, **330**, **332**, interconnectable and/or or securable elements **322**, **324**, **334**, **336** may have any of a various suitable dimensions, sizes, or shapes (or e.g., rounded shapes or corners, angled ends, etc.), and interengageable slots **326**, **328**, **338**, **340** could be deeper or shallower or be oriented at an angle with respect to the vertical edges of the interconnectable ends with an engageable member having a complementary dimensioned slot or an angled slot. Moreover, the interconnectable ends could be hinged or bendable in such a way that adjacent forming members could be angled with respect to one another to create a variety of passageway arrangements and formed wall configurations.

[0111] Also, as shown in FIG. **6**A, additional apertures (**418**, **420**, **422**, **424**) may be provided in guide flanges (e.g., **414**, **416**) (to facilitate securing complementary base flanges of another forming member with a fastener or to secure the flanges to some other structure); moreover, apertures (e.g., **426**, **428**, **429**, **430**, **432**, **434**, **436**, **438** (not shown)) of the interconnectable ends, apertures (e.g., **435**, **437**, **439**, **441**) of the base flanges (e.g., **394**, **398**) or apertures (e.g., **421**, **423** (not shown), **425**, **427**) of the support flanges may also be selectively sized and positioned as needed for a particular forming layout. These features and apertures could be used with any forming member configuration (e.g., **10**, **310**, **78**, **156**, **224**, **172**, **230**, etc.) and may be used for various purposes such as for example, securing the forming members to braces, other anchoring structures, other forming members, etc.

[0112] When forming up a "footing" for a wall for example, in one embodiment, any of the various apertures (e.g., **426**, **428**, **429**, **430**, **432**, **434**, **436**, **438**) of the interconnectable ends, may be used with a fastener to secure one end of a forming member to another. That is, for a formed up footing, or for the bottom row of forming members of a formed up wall (e.g., see **10**, **78**, **218** in FIG. **5**), engagement members (e.g., **68**, **81**, etc.) may be used to secure the upper portions of the adjacent forms (e.g., **10**, **78**, **218**). However, the lower portions (and/or the upper portions) of the forms could be secured together by inserting fasteners, connectors or the like through apertures (shown in FIG. **6**A (but not shown in FIG. **1**, but which could be provided)) in the interconnectable ends to more snuggly secure the lower portions of the adjacent forming members next to one another so as, for example, to further prevent shoring or buckling or the like once a heavy material (e.g., concrete, etc.) is poured into the formed up wall or footing.

[0113] Likewise, apertures (e.g., **435**, **437**, **439**, **441**) of the base flanges (e.g., **394**, **398**) may be used to anchor the forming members to the ground, foundation, sidewalk, flooring or some platform-like structure (or even a wall in some instances).

[0114] Moreover, it will be appreciated, that a footing for a retaining wall or the like could also be formed up and poured first before a retaining wall is formed up. The footing could be formed up by using a plurality of forming members that are wider than the width (in one embodiment as denoted by P_w in FIG. **2**) of the forming members that will be used to form up the retaining wall. It should be recognized that the spacing between the support members of the forming members of the footing could be adapted, modified or reduced so that narrower forming members for the retaining wall could be stacked on the formed up footing before pouring any concrete. Also, the footer could be first formed up and poured; and after the concrete hardens, the retaining wall forming members could be positioned atop the footing and tied in as appropriate with rebar or the like.

[0115] With any type of forming system, it should be noted that a builder must ensure that needed bracing and supports are used as well as a proper base for the formed up wall before and after pouring a material such as, for example, concrete. Another consideration, however, is to not stack the forming members too high so as to create excessive pressure on lower rows of forming members to be filled with concrete. Instead, just the lower rows or levels could be filled with concrete first.

After the concrete cures, then, successively higher rows can be filled and cured in stages as needed.

[0116] Referring now to FIG. **6**B, in one possible embodiment, spacer connectors **452**, **454** may be selectively dimensioned or located, for example, horizontally, vertically, or as desired within the passageway **455** as needed for a particular application. Each of the panels **440**, **442** and their interconnectable ends **444**, **446**, **448**, **450**, respectively may be unitarily formed from one section of material or constructed in separable or connectable components having a material thickness suitable for heavy-duty or other applications. For example, the panels **440**, **442** and the interconnectable ends could be formed from a higher gauge, thicker metal or other material. In addition, as shown, the base flanges could have the same length as the support members **456**, **458**.

[0117] The various components of the panel could also be connected together in various ways. For example, each of the interconnectable ends and/or elements could be connected to a respective panel by any of a variety of methods, such as welding, hinging, fastening (riveting, threaded fasteners, removable or permanent connectors, etc.)

[0118] It will also be appreciated that the forming member has a modular, portable configuration. The forming member could be constructed from only two unitary structures or integrated panels and at least one type of one spacer connector. Such a configuration would foster ease of assembly or disassembly as well as handling, transporting, and storage of the forming member(s).

[0119] Referring now to FIG. **6**C, in one example embodiment, a unitary structure **460** is reusably combinable with other unitary structures to create forms or forming members to receive a settable material. The unitary structure **460** preferably comprises a panel **462**, at least one integrally formed interconnectable end, but preferably two interconnectable ends **464**, **465** with each interconnectable end defining a securable or interconnectable element **466**, **467**, respectively. The unitary structure **460** preferably further comprises a base flange **468** integrally formed at a first peripheral edge **470** of the panel **462**, and a support member **472** integrally formed at a second peripheral edge **474**.

[0120] The at least one integrally formed interconnectable end, in one embodiment, or preferably each of two integrally formed interconnectable ends, could also define an interconnectable element forming an interengageable slot with its respective interconnectable end integrally formed at a peripheral end of the panel.

[0121] The panel, the at least one integrally formed interconnectable end, base flange, and support member are preferably of a one-piece construction and comprise at least one of sheet metal or plastic. The spacer connector components may also be made from metals, plastics or other materials as noted herein. Also, the panels, interconnectable ends and/or elements, support members and/or spacer connectors may be formed from a durable, heavier gauge metal depending on the use. For example, the panels may be made from steel or galvanized steel sheets or aluminum as well as other metals (copper, tin, etc.). However, various other suitable materials, known to one of ordinary skill in the art, for forming applications could be used as well. Each panel may have a certain gauge wall thickness suitable for retaining and forming heavier or less viscous materials. On the other hand, each panel may have a lesser gauge wall thickness for retaining and forming lighter or more viscous materials. For example, forming members used for concrete may have a wall thickness, in one possible embodiment, in the range of 1/16 of an inch to 1/8 of an inch. In another possible embodiment, the wall thickness may be in the range of 1/8 of an inch to 1/4 of an inch; in other embodiments the wall thickness of the various forming member components and structures may vary depending on the application. One possible material may be a steel sheet metal or aluminum; others will be explained further hereinafter.

[0122] In manufacture, the unitary structure could be formed with a press or other suitable machinery to form substantially orthogonal bends along peripheral edges of the panel **462** (e.g. **470**, **474**, **476**, **478**, **480**) to form a unitary member as shown in for example, in FIG. **1** or **6**A (e.g., **183**, **185**, **313**, **317**). Also, some or all edges and/or corners (e.g., **461**, **463**, **464**, **465**, **471**, **473**, etc.) and other structures may preferably be rounded or smoothed using a grinder or the like for ease of handling, to improve storage, etc.

[0123] It should also be recognized, that the same unitary structure **460** may be manufactured and used interchangeably for either side of the forming member; thus, a forming member could be manufactured from only two unique components: the unitary member and the spacer connector (comprising the spacer element and connector) and the entire forming member could be constructed from only two unitary members and one or two spacer connectors.

[0124] In addition, such a unitary structure and/or separable portions thereof (e.g., as described with respect to forming member **10**, **172**, etc.)—as well as the entire forming member—could be made from wood, fiberglass, or molded from plastic using injection molding or other suitable manufacturing processes. In some embodiments for certain applications, various structures of the forming member may be formed from high-density polyethylene, polypropylene or other suitable polymers or materials which satisfy desired strength requirements. At least some of the forming member may also be manufactured from various composite materials to make the forming member suitably lightweight and durable for various uses in the construction industry or for various applications in other technology areas or industries.

[0125] It will be appreciated, that with such a unitary, modular, and compactable configuration as noted herein, a plurality of forming members—in a "disassembled" mode—can be more efficiently and easily transported to a construction site. Once at the site, the forming members can then be assembled using whatever sized spacer connector lengths are needed for a desired wall thickness and the forming system can be easily installed on site. On the other hand, in view of the portability of the forming members, they can also be pre-assembled at a factory, and, if needed, be easily stacked in certain pre-determined formed up wall dimensions for shipment.

[0126] It should also be emphasized, that the weight and portability of the forming system provide many advantages compared to various other systems. With a lighter-weight configuration in use, the forming members could be easily lifted and stacked and/or interconnected. In addition, the forming member panels and spacer connectors are easy to store and would generally take up little space, comparatively, because the panels could be nested and stacked in a disassembled mode. Thus, many thousands of such "nestable" panels and spacer connectors could be manufactured and stored in inventory without requiring substantial space. Moreover, even in an "assembled" mode, a wall of portably

and compactly configured forming members, could be stacked and conveniently kept in a storage facility.

[0127] In view of the foregoing, the simplicity and efficiency of the forming system can be appreciated. Exemplary embodiments of the present invention include various configurable features of a forming system fostering effective and versatile construction and a quick and easy method for manufacture and assembly of a plurality of forming members. In addition, the cost per individual form would be selectively variable and controllable depending on, for example, the manufacturing costs and the material used.

[0128] In effect, the modularity, flexibility, simplicity, and versatility of the forming members provides a selectively arrangeable forming system having features that foster a variety of designs, shapes and arrangements depending on what type of building, shed, containment wall, footing, garage, room, house (exterior walls, or interior walls) or other structure is being formed up and what type of material is being used. In addition, the forming member can be secured to existing building structures and for example, used to tie into and/or replace existing wood or other walls.

[0129] Turning now to FIGS. **7** and **8**, several more of many possible embodiments are shown. The embodiment in FIG. **7** illustrates at least part of a substantially non-linear forming member **172** comprising at least two panels in spaced relation (not yet showing the spacer connector(s)) and configured so as to define a passageway having a substantially ninety-degree or right angle configuration adapted to retain a conformable material. Various embodiments may be formed as a corner-type forming member including forty-five-degree, thirty-degree angle corners, and other angled configurations or the like. Preferably, forming member **172** comprises a first panel **174** having a substantially ninety-degree configuration and a second panel **176** also having a complementary substantially ninety-degree configuration, with the first panel **174** being shorter, in one possible embodiment, than the second panel **176**. Each of the panels **174**, **176** may be formed from one panel which is bent into a ninety-degree configuration. Or, each panel could be comprised of two smaller panels connected together in any of a number of ways that would be known to a person of ordinary skill in the art.

[0130] Forming member **172** preferably further comprises spacer connectors (not shown in FIG. **7**), with each spacer connector comprising a spacer element and a connector. In one embodiment, the spacer connectors may be similar to those used in forming member **10** (and/or **310**, etc.). The spacer connectors are adapted to releaseably secure first panel **174** to second panel **176** in a manner somewhat similar to spacer connectors **42**, **44** included with forming member **10** (in a possible embodiment as discussed above). To install the spacer connectors, the spacers may be positioned within the interior of the passageway **178** and located between the apertures (e.g., **184**A of panel **174** and **184**B (not shown) of panel **176** or **186**A of panel **174** and **186**B (not shown) of panel **176**). A connector may be inserted, for example, first through aperture **184**A formed in panel **174**, then through the spacer element (preferably having a hollow tube-like body), through the complementary aperture **184**B formed in panel **176** and then secured with a connector fastener so as to preferably releaseably connect panel **174** to panel **176**. Another spacer connector could then be connected in a similar manner through apertures **186**A, **186**B. It should be appreciated that the connectors can be initially inserted either way, for example through **184**A or **184**B and thus be tightened or untightened from whichever side of the forming member is most desirable. With this bi-directional installation feature, all fastening members of a plurality of forming members (e.g., **10**, **310**, **172**, etc.) can be configured such that they are manipulable from one or any side of a formed up wall. Or, moreover, if there is an obstacle blocking access to one side of a given forming member, the forming member connectors may be installed such that they are disconnectable and removable from the accessible side. It should be recognized, that if a side of one or more forming members is blocked by an existing permanent wall or other structure (e.g., when forming up a footing in a trench or the like), each connector, comprising for example, a bolt and nut in one possible embodiment, would need to be installed such that the bolt (having a desired length) can be pulled out on the side opposite (or in some instances on the same side as) the existing permanent wall or structure (e.g., side of the trench). In other words, there needs to be sufficient room on the side to remove the entire shaft of the bolt. Otherwise, the forms may not be removable. Thus, a row of forming members, in some embodiments, may be interconnected in a longitudinally-extending row parallel and positioned immediately adjacent an existing longitudinally-extending existing wall—if there is sufficient space between the side of the row of forming members and the existing wall. Also, the spacing in various embodiments should be sufficient so as to permit the bolt head and/or nut to be manipulated and removed so the panels can in turn be disconnected and removed. In other embodiments, the forming member may also have a nut that is fixed or welded in place on the panel such that it does not need to be manipulated by hand or with a tool to prevent it from turning when the bolt is being tightened or untightened.

[0131] The panels **174**, **176** in one embodiment, also preferably comprise base flanges **204**A, **204**B, **206**A, **206**B and support members **208**A, **208**B, **210**A, **210**B, respectively with the support members being adapted to alignably receive the base flanges of another complementarily configured ninety-degree forming member (or corner) (or other stackable forming member **10**, **310**, etc.) being stacked on the forming member **172**. Forming member **172** further preferably comprises interconnectable ends and elements similar to, in one embodiment, forming member **10**, which are connectable with an engagement member. Also, forming member **172** could form any apertures as described above with respect to forming member **10** (and/or **310**, etc.) as needed.

[0132] It should also be recognized that a forming member could define a passageway having any of a variety of substantially non-linear (or linear) configurations such as noted above, or for example, having a curved, arched, rounded, zigzagged, V-shaped, U-shaped, or other non-linear configuration, or any other shaped configuration suitable to form a passageway for receiving a material which is preferably conformable. The forming member could also have an X-shaped, T-shaped (as will be explained hereinafter) configuration and the forming system could include any of various combinations or arrangements of substantially linear and/or non-linear forming members or forming members having other configurations.

[0133] In addition, in view of the flexible configuration of the forming member, two or more panels (as well as the interconnectable ends) could be parallel or be selectively disposed at angles (laterally or longitudinally, or vertically or horizontally), or, for example, inclined with respect to each other, such that a passageway would have a wedge-shaped,

trapezoidal cross-section, or other oriented configurations (e.g., as viewed from the top or an end of a forming member) (or at converging or diverging angles maintained with various spacer connector lengths), as desired along the span of a formed up wall. Of course, the panels of adjacent forming members would be oriented and configured such that the interconnectable ends, support members and/or base flanges had a complementary fit with other adjacent forming members as needed. In this way, forming members could be configured with various opposing panels at selected angles, or with interconnectable curved panels (e.g., intermittently located in a formed up wall as desired, perhaps with an inner panel being planar and an outer panel being curved—such that a poured concrete wall would have a selectively curved outer surface) or other geometrical patterns to as to define a passageway having any of a number of selected configurations or arrangements for various applications, design uses or aesthetic appeal.

[0134] Referring now to FIG. **8**, another example embodiment is illustrated including at least three panels configured so as to define a passageway having a substantially T-shaped configuration adapted for retaining a conformable material.

[0135] In one embodiment, the preferably T-shaped forming member **230** comprises at least three panels disposed in a spaced relationship (not yet showing the spacer connectors) and configured so as to define a passageway having a substantially T-shaped configuration. Forming member **230** preferably, comprises a first panel **232** having a substantially ninety-degree or right angle configuration, a second panel **234** having a substantially linear configuration and a third panel **236** also having a substantially ninety-degree or right angle configuration. The three panels **232**, **234**, **236** are preferably dimensioned, shaped and disposed in a complementary arrangement, in one embodiment, as shown in FIG. **8**, so as to form a T-shaped passageway. The first panel **232** and third panel **236** preferably have the same dimensions. As with forming member **172**, each of the panels **232**, **236** may be formed from one panel which is bent into a ninety-degree configuration or each panel could be comprised of two smaller panels connected together using any of a variety of ways known to one of ordinary skill in the art.

[0136] Forming member **230** preferably further comprises three spacer connectors (not shown in FIG. **8**), with each spacer connector comprising a spacer element and a connector. In one embodiment, the spacer connectors are similar to those used in forming member **10**. The spacer connectors are adapted to releaseably secure first panel **232** to second panel **234** in a manner somewhat similar to spacer connectors **42**, **44** included with forming member **10** (in a possible embodiment as discussed above). To install the spacer connectors, the spacers may be positioned within the interior of the passageway **238**A, **238**B and secured through the apertures shown in a similar manner as discussed above with respect to forming members **10** (and/or **172**, etc.). However, preferably three spacer connectors are used to releaseably secure the panels **232**, **234**, **236** together in a T-shaped configuration.

[0137] Also, as shown in FIG. **8**, the panels **232**, **234**, **236**, in one embodiment, also preferably comprise base flanges **240**A, **240**B, **242**, **244**A, **244**B and support members **246**A, **246**B, **248**, **250**A, **250**B, respectively with the support members being adapted to alignably receive the base flanges of another complementarily configured T-shaped forming member (or, for example, in part other complementary forming members **10**, **172**, **310**, etc.) being stacked on the forming member **230**. Forming member **230** further preferably comprises interconnectable ends and elements similar to, in one embodiment, forming members **10**, **310** (and/or **172**, etc.), which are connectable with an engagement member. Also, forming member **230** could also form various apertures as described above with respect to forming members **10**, **310** (and/or **172**) as needed.

[0138] In addition, it should also be emphasized that in a possible embodiment, each of the linear or non-linear forming members is preferably constructed with a spacer element having a pre-designated width. Thus, a formed up wall of forming members used for a retaining wall, for example, may be configured such that the poured retaining wall might have a width as denoted by the passageway width P_w (e.g., in FIG. **2**). In some embodiments, each forming member of the formed up retaining wall would have a width P_w as shown in FIG. **2** and as established by, for example, a spacer element **46**, as shown in FIG. **3**.

[0139] In another possible embodiment, a forming member may be configured to close or seal off a passageway and in effect form an end panel (or wall) or end cap. The forming member may comprise one or more panels configured so as to define a passageway having a partially closed configuration. Referring to FIG. **9**, in one embodiment, an end forming member **260** comprises a panel **262**. Panel **262** may be three-sided (e.g., **264**A, **264**B, **264**C) and may be formed from one panel or piece of material which is bent or formed into the end-shaped configuration as shown in FIG. **9**. With this configuration, a portion of the panel including two sides **264**A, **264**B would be bent to form a substantially a 90-degree configuration. Then sides **264**B, **264**C, respectively would be bent to form another substantially a 90-degree configuration as shown in FIG. **9**. In addition, in another embodiment, panel **262** could be comprised of, for example, three smaller panels configured so as to define a passageway having a partially closed configuration and with each of the panels connected together in any of a number of ways.

[0140] End forming member **260** may further comprise one or more spacer connectors (not shown in FIG. **9**), with each spacer connector comprising a spacer element and a connector. The spacer connectors may be similar to those used in other forming members (e.g., **10**, **310**, etc.) and appropriately formed apertures could be provided as needed. However, side **264**B serves as a spacing structure to separate and space apart sides **264**A, **264**C such that passageway **266** therebetween has a desired width (i.e., the distance between sides **264**A, **264**C). This desired width may vary depending on the application and may be established by the length of a spacer element. For example, spacer element **46**, shown in FIG. **3** has a length equivalent to the width of the passageway, denoted as P_w. This may also be the desired width of the forming member passageways (e.g., see width denoted as P_w in FIG. **2**) (As noted above, this width may be the same as the width of a 2×4 or other sized board, etc.). Thus, side **264**B would, in certain embodiments preferably have a width substantially equivalent to the length of the spacer elements used to establish the passageway spacing in the forming members.

[0141] The panel **262** in one embodiment, also preferably comprises base flanges **268**A, **268**B, **268**C and support members **270**A, **270**B, **270**C, respectively with the support members being adapted to alignably receive the base flanges of another complementarily configured forming member (or other forming member **10**, **172**, **230**, **310**, etc.) being stacked on the end forming member **260**. End forming member **260**

further preferably comprises a pair of interconnectable ends and elements similar to, in one embodiment, forming member **10** (or **172**, **310**, etc.) which are connectable with an engagement member. Also, end forming member **260** could also form various apertures as described above with respect to forming member **10** (and/or **310**, etc.) as needed.

[0142] In one other possible embodiment, an end panel or forming panel may be configured to seal off a passageway and in effect form an end wall. Referring to FIG. **10**, in one embodiment, an end panel **272** comprises a panel **274**. At least a portion of panel **274** could serve as a spacing member and would, in certain embodiments, preferably have a width substantially equivalent to the length of the spacer elements used to establish the passageway spacing of the forming members. That is, as noted above, the desired width may vary depending on the application and may be established by the selected length of a spacer element. For example, as noted, spacer element **46**, shown in FIG. **3** has a length equivalent to the desired width of the passageway, denoted as P_w. This may also be the desired width of the forming member passageways (e.g., see width denoted as P_w in FIG. **2**).

[0143] The panel **274**, in one embodiment, also preferably comprises a base flange **276** and support member **278** with the support member being adapted to alignably receive the base flange of another complementarily configured end panel (or other forming member **10**, **172**, **230 310**, etc.) being stacked on the end panel **272**. Also, end panel **272** could also form various apertures in the panels, flanges, and/or members as described above with respect to forming members **10** or other forming members as needed.

[0144] It should be recognized that end panel or forming member **272**, in one possible embodiment, preferably comprises two interconnectable ends **280**, **282**. Each interconnectable end, in one embodiment, comprises a pair of spaced interengageable flanges. With this configuration, interconnectable end **280** would preferably comprise a pair of spaced interengageable flanges **284**A, **284**B while interconnectable end **282** would preferably comprise a pair of spaced interengageable flanges **286**A, **286**B, as shown in FIG. **10**. It will be appreciated that the interengageable flanges are specially configured such that they may be interconnected to the interconnectable ends of an adjacent forming member (such as, for example forming member **10**)—without the use of an engagement member. With such a configuration, a selected pair of interconnectable ends of a forming member would not need a specially configured interconnectable element defining an interengageable slot; also, as noted, an engagement member would not be necessary. The interengageable flanges are spaced sufficiently apart as denoted by F_s, such that they may be positioned above the interconnectable ends of a given forming member and lowered (as indicated by the arrows designated with an "A" in FIG. **10**) and connected with the interconnectable ends of the forming member. For example, in one embodiment, end panel **272** would have a length equivalent to the width denoted as P_w of forming member **10** (as shown in FIGS. **2** and **1**). The interengageable flanges **284**A, **284**B and **286**A, **286**B of end panel **272** are adapted to be positioned above the interconnectable ends **18** and **30** respectively of forming member **10** as shown in FIG. **1**; the interengageable flanges, then may be lowered down slidably over the interconnectable ends **18**, **30**. That is, a user would lower and slide the interengageable flanges **284**A, **284**B and **286**A, **286**B over the interconnectable ends **18**, **30** (being slotted or unslotted) of forming member **10**—and in place—so as to close off the passageway **16** of forming member **10**.

[0145] Now turning again to FIG. **11**, other features of the spacer connector and forming system should also be recognized. The forming member is advantageously configurable such that a given spacer element may be adapted to be selectively sized in relation to a desired form object. A form object may include any of a number of structures used in building construction, for example, to form out a window opening, doorway, crawl space, air space, or other opening or cavity before filling the passageways of a formed up wall with concrete or the like (e.g., boards, pre-made box forms, pipes (e.g., for plumbing or wiring), etc). Such a feature may also be used to form archways, curved or angular headers, or any of a number of openings within a wall.

[0146] The form object **89** in FIG. **11** may preferably be a wooden board (such as a 2×4, 2×6, 2×8, etc.) having a width which is equivalent to the length of the selectively sized spacer element **91**B. For example, the spacer element may have a length equivalent to the passageway width as denoted by P_w as shown in FIG. **3**, which would preferably be substantially the same as the width of the form object **89**. In this way, the at least two panels **97**A, **97**B may be releaseably connected so as to removeably capture a desired form object **89** within the passageway **95**. It should be further recognized that, in one embodiment, the conformable material comprises concrete and the form object may comprise one or more form boards which may be connectable in a desired configuration and be selectively sized. That is, a window or doorway opening, or other void, cavity or the like could be formed up by four 2×4 form boards connected to create the desired shape (e.g., square, rectangle, etc.) and having a dimensioned perimeter and lateral width corresponding to the required window or doorway opening dimensions. The form object could then be positioned in a desired location within the formed up passageway.

[0147] It should be noted that the formed up wall may include many interconnected and stacked forming members (e.g., shown in part in FIG. **5**) or any number of a plurality of forming members. In this way, the formed up wall of forming members would be adapted to "nest" the form boards within the passageway so as to form a desired cavity within the passageway. Adjustable spacer connectors, may be positioned within the passageway as desired and be sufficiently tightened around the form object (e.g., to "squeeze off" the interface between the panel and form object and create a seal) so as to prevent unwanted leakage of concrete or the like into the cavity. After concrete has been poured into the passageway and cured, the spacer connectors (e.g., **91**A, etc.) could be disconnected and the panels (e.g., **97**A, **97**B) could be removed—along with the "form object"—leaving the required window, doorway or other opening formed in the concrete wall.

[0148] Referring now to FIG. **15**, the forming system also preferably further comprises a support connector **295** having a portion insertable through a spacer element **296** captured within a formed wall **297**. That is, the spacer element **296** would remain, in some embodiments, after a material has been poured and has hardened around spacer element **296** and after the panels have been disconnected and removed. In one embodiment, the support connector **295** preferably comprises a fastener element and at least one support element, wherein the at least one support element is adapted to be secured proximate at least one surface (e.g., first surface or second

surface (e.g., which may be inner and outer surfaces)—or both surfaces with multiple support elements) of a formed wall. In a possible embodiment, the support connector **295** preferably comprises a fastener element **298** and a support element **299**, wherein the support element is adapted to be secured proximate an inner surface (e.g., inner **289**) of a formed wall.

[0149] The support element **299** is, in some embodiments, preferably secured by the fastener element immediately adjacent the inner surface of a formed wall. In this way, the support element, in one embodiment, can be used inside a structure (such as, for example, an interior room, garage or other enclosure or wall) to support some interior object **293** (such as for example shelving, flooring, etc.). The support element **299** is preferably configured so as to form an aperture **299**A through which a portion of the support connector **295** (such as for example, the shaft of a bolt or other connector (or part of fastener element **298**)) may be inserted. In addition, the head **287** of the connector **295** could also be rounded-off or substantially flush-mounted, in some embodiments, with respect to surface **291** as desired.

[0150] It should be noted that a support connector could also be configured for use with a forming member. That is, the support element could be adapted to be secured adjacent to an interior surface of a forming member panel to support an object or forming object (see FIG. **11**) or structure within the passageway (for example, to form a cavity or the like within the passageway, in some embodiments, in a similar manner as shown in FIG. **11**).

[0151] Also, in one embodiment, after the panels are disconnected from the cured and formed wall of concrete, any aperture or opening in the formed concrete wall (or a selectively configured support element) may be used to attach a support member adapted to secure bricks, siding, paneling, insulation or insulating systems or some decorative or functional wall surface to the formed concrete wall. Openings could also be selectively sized with a spacer element (in some embodiments, with the spacer element being removable) and be selectively located such that wiring, plumbing, conduit, piping, other building systems or components or the like could be disposed through the opening to provide a passageway or means for locating, installing, or passing such building components from the outside to the inside of a formed structure such as a concrete shed, garage, or other building structure. In addition, if the apertures are not used, they may be sealed with suitable sealers, plugged or filled with suitable material.

[0152] Referring now to FIGS. **12** and **13**, in some embodiments, it will be appreciated that a forming member may also further comprise a contour member being mountable within the passageway of the forming member.

[0153] For example, in FIG. **12**, contour member **280** may be configured, in one embodiment, so as to be mounted on the inner surface of, for example, panel **14**. The spacer elements **46**, **48** (FIG. **1**) would be sized and configured so as to be selectively insertable (e.g., through contour member apertures **284**, **286**) or have distal ends adapted to secure the contour member **280** immediately adjacent the inner surface of panel **14**. The contour member could have the same perimeter dimensions as panel **14** or it could be dimensioned to cover a plurality of inner surfaces of various panels.

[0154] A contour member may have any number of a variety of surface patterns, reliefs, or other configurations. For example, as shown in FIG. **12**, contour member **280** may have projections **282**A, **282**B, etc., forming an inner contoured surface having a plurality of ridges. These ridges would face into the passageway (e.g., **16** in FIG. **1**) and create (or imprint) a corresponding pattern on the resulting outer surface of, for example, a formed concrete wall. In the same way, in FIG. **13**, contour member **288** is shown having a raised star configuration **290** being mountable (e.g., via apertures **292**, **294**) within a passageway in a similar manner as contour member **280**. Each of the contour members preferably has a selected surface contour facing the interior of the passageway.

[0155] With the design flexibility and configurability of the forming system, a variety of forming members having substantially linear and non-linear configurations (with inner and/or outer panels having any of a number of design and visual features) could be interconnected to form up a wall having various designs, shapes, outer and inner wall surface contours, and dimensions.

[0156] In view of the foregoing, it should be noted that, the various interconnecting, stacking, and other cooperative and interrelations features of the substantially linear and/or non-linear forming members provides a forming system and method and apparatus such that a plurality of forming members are selectively configurable and interconnectable in any of many desired arrangements. As such, at least a portion of an enclosure (e.g., a shed, garage, wall (e.g., see FIG. **5**) or other structure to be formed with or without formed up windows, doors, or other features as explained hereinafter) may be constructed from the forming members, with the forming members defining a plurality of passageways for retaining a material which is, in one example embodiment, a conformable material such as concrete.

[0157] In use, the number of forming members, end panels, and other forming structures to be made ready for a particular project will generally depend on a pre-determined construction plan or blueprint or other building or structural layout. Typically, the dimensions of the building, wall or structure will determine the number of forming members needed for the project. Each of preferably a plurality of forming members and/or panels (e.g., linear and/or non-linear forming members, end forming members and/or end panels, etc., as needed) may be assembled in a similar manner as that described herein (e.g., as explained for each of the forming members, panels and structures with respect to FIGS. **1-15**).

[0158] For example, a linear forming member similar to forming member **10** (and other forming members), in one embodiment, is preferably assembled using a desired selected spacer connector—which has a variable-length feature. That is, a spacer connector can be used which has a spacer element and connector having a selected length depending on the desired "finished" wall thickness (which should be indicated in, for example, a building plan). As an example, the panels **12**, **14** of forming member **10** are preferably assembled and secured together with the selected spacer connector in the manner as described above with respect to FIGS. **2** and **3**.

[0159] In one embodiment of a method, initially the base or ground level forming members are placed first—with additional layers stacked thereafter. Corner-shaped forming members (e.g., like forming member **172** in FIG. **7**) or other forming members (or, for example, other non-linear forming members **230**, etc.) are first preferably positioned according to the building plan. The forming members are positioned and lined up preferably level with the corner forming members so as to form a base or footing of forming members (e.g., to form up the base perimeter of the structure).

[0160] For example, with a forming member (e.g., **10**) preferably positioned on a desired surface which is preferably flat and level, another forming member (e.g., such as forming member **78**, see FIG. **5**) in one embodiment, is positioned immediately adjacent forming member **10**. Generally, all of the forming members along the base or ground level (or footing) would have the same width.

[0161] Preferably, the entire perimeter of forming members creating the base or ground level is laid out and interconnected, in one embodiment, with engagement members (e.g. **68**, etc. in FIGS. **4** and **5**) (or, in some embodiments, a suitably configured slotted exterior angle). This process will align the base or ground level perimeter to conform to the outline of the building, wall, or structure.

[0162] The perimeter of forming members is preferably leveled, squared up and made plumb as needed, by checking the horizontal and vertical alignment and positioning using a common level tool or certain conventional leveling equipment, shims or other systems and devices. Although it is preferable that the forming members be interconnected and stacked in a level row, the forming members may not be level in certain situations. In such instances, sometimes the fluidity of a poured conformable material such as, for example, concrete will generally level itself within the formed up wall (which effectively forms a plurality of passageways or channels in communication with one another).

[0163] In one embodiment, for example referring to FIGS. **1-5**, to interconnect adjacent forming members, engagement member **68** is positioned (as oriented in FIG. **4**) above the interconnectable ends **20**, **77** of the forming members and lowered into the slot **28** of forming member **10** and the corresponding slot (not shown) of forming member **78** so as to interconnect the two forming members. Forming member **156**, preferably having the same (or similar) configuration as forming member **10**, is then preferably stacked on forming member **10** (as shown). That is, the base flanges **104**, **106** of forming member **156** are lowered between the support members **96**, **100** (see FIGS. **1** and **5**) of forming member **10** so as to be alignably received and secured between the support members (e.g., in this way, forming member **156** rests or sits on top of forming member **10**). A pin (e.g., **154** in FIG. **14**) may also be inserted into corresponding apertures in the base flanges of forming member **156** and preferably horizontally oriented guide flanges of the support members **96**, **100**. In this way, the stacked forming member **156** may be more securely aligned with forming member **10**. In addition, concrete nails, spikes, or other suitable anchoring devices may be used to secure the base flanges of forming members **10**, **78**, **218**, etc., to a desired surface or the ground. Other forming members (e.g., having substantially linear configurations (e.g., straight or end forming members or panels, etc.) or substantially non-linear configurations (e.g., 90-degrees; 45-degrees; T-shaped forming members, etc.) may be interconnected and stacked in a similar manner to build a formed up wall (as shown FIG. **5** (not showing corner forming members, etc.)), enclosure, or other structure.

[0164] In some structures, it is at the base level that interior forming objects and the like are placed in the passageways (inside the forming members). That is, as explained before, form objects (form boards, boxes, pipes, etc.) may be installed within the passageways to create voids for window or doorway openings, holes for piping or plumbing (e.g., at the base or ground level) or other cavities. Forming objects for windows are placed at the level needed when forming up a wall.

[0165] Also, the formed up wall may be reinforced using steel rods or rebar or other structural reinforcements. Rebar, for example, may be positioned and oriented as desired (horizontally, vertically, diagonally, etc.) within the passageways or channels and tied or wired to spacer elements or just, in some appropriate instances, positioned in place as desired. Reinforcing structures secured vertically aid in joining each level of forming members and keeping the forming member rigid and in place. Bracing structures (e.g., boards, tension wires, cables, etc.) may also be installed or secured as needed. Moreover, other structures, connectors (e.g., such as J-anchors, anchor bolts, etc.) or the like, may be used in some instances (e.g., on top form rows) to attach, tie in or anchor a roof to a wall (or to tie a wall to an existing wall) or the like. The base (or ground) level may then receive concrete, or additional forming members may be stacked in the same conformity as the base level as noted herein. This process may be continued to the desired height of the wall. With this configuration, concrete may be poured in a one-pour process (or level-by-level as will be explained further.) (It should be noted that sometimes it might also be desirable to appropriately—and very carefully—vibrate or agitate the wet concrete to cause it to fill voids and flow more evenly throughout the passageway).

[0166] After the wall has been completely poured and has cured, the forming members and forming objects may be removed and the desired openings for windows, doors, plumbing, etc., will remain. Also, after removing the connectors and panels, the spacer elements will remain leaving openings that may be used (depending on what is built) or that may be filled with a sealer, foam, or concrete or plugged as noted earlier.

[0167] As noted above, with the modular, compact, and removable configuration of the forming members and system, a wall or structure could be built in one or more layers, levels, sections or stages at a time—as is convenient for the user. (It should also be recognized that with such a configuration, only the spacer element, in some embodiments, is generally not reusable).

[0168] For example, two rows of forming members could be formed up and reinforced with rebar, and then concrete could be poured. After the concrete hardens, the same forming members could be dissembled and used at a later time (e.g., over another weekend, etc.) to form up, tie in and pour another section of the wall. The same process could be followed—or be stopped and started as convenient for the user—until the desired building structure is completed. With such features, the forming system could readily be used, at a person's convenience, for example, in a person's backyard for weekend projects or the like.

[0169] In certain embodiments, it should be noted that the footings of wall sections (or the walls) could also have varying widths. For example, one footing section could have a width of eight inches (e.g., to support a wall of eight inches) and be connected to another footing section with a width of ten inches (e.g., to support a wall of ten inches). Thus, for example, in one embodiment, a selectively configured forming member would be provided and serve as an interface forming member to transition between walls of varying widths. Such an interface forming member would be configured such that each panel (e.g., modified panels **12**, **14**) would

have extensions bent outwardly at a desired location away from the passageway (e.g. **16**). Each of the panel extensions would extend sufficiently such that the interconnectable ends and slotted elements would be lined up and be interengageable with the interconnectable ends and slotted elements of the wider forming member. For example, panel extensions would be added to the eight-inch wide form so as to position and line up the interconnectable ends and slotted elements thereof such that they would be interengageable with the corresponding interconnectable ends and slotted elements of the wider ten-inch forming member—and be connectable with an engagement member (e.g., **68**). In this way, an appropriate structural interface would be established between adjacent formed up walls with different widths.

[0170] Referring again to FIG. **1**, in one possible embodiment, each panel **12**, **14** may preferably be sized, for example, to be about one foot high and two feet long. It should be recognized that each forming member (e.g., substantially linear, non-linear, etc.) may be uniformly or universally sized and interconnectable. In other embodiments, however, one panel may have a different size than its complementary panel. Various panels or forming members may have different sizes or shapes and be connected in spaced relation to create any of a number of formed wall designs and configurations. For example, the forming member could be configured as a first level forming member and adapted to be placed directly on a stepped region of a footing, foundation, sidewalk, walkway, street, curb, or some platform-like structure. That is, the panels would be shaped such that the body (e.g., **13** in FIG. **1**) of the panel and base flanges would be formed or constructed so as to have a stepped configuration (e.g., or a variable shaped bottom flange or edge) that is complementary and in functional cooperation with the stepped surfaces or the like (or other surfaces). In this way, a wall could be formed up and directly poured on an irregular surface or foundation or other existing structure. The wall could be secured to or tied into the existing structure by interconnecting rebar or other components to the forming member (e.g., spacer element) and then to some anchoring component or member on the existing structure.

[0171] In addition, the panels are preferably connected with two uniformly configured spacer connectors. In other possible embodiments, however, each panel may be much larger or smaller and the number of spacer connectors can be increased or reduced as suitable.

[0172] It will be appreciated that a given forming member (e.g., **10**, **172**, **310**, **230**, etc.) may be used in certain situations without any spacer connectors. This is because, in a possible embodiment, as noted, a forming member (for example, **10**, **172**) has a pair of interconnectable ends (e.g., **18**, **30** and **20**, **32**), at both ends (e.g., **180**, **182**), respectively, of the forming member (e.g., **10**). Each of the ends **180**, **182** of forming member **10** is adapted to be interconnected to complementary ends of adjacent forms. The interconnection with the adjacent forms, in some instances, may be sufficiently tight and firm to hold the panels of a given forming member in spaced relation without the need for having to install spacer members, connectors, standoffs, etc., to maintain the desired spacing.

[0173] In another possible embodiment of the present invention, with some features being similar, in one embodiment, to those in FIG. **1**, a forming system to retain a material is provided. The forming system, in one embodiment preferably comprises a forming member comprising at least two panels in spaced relation so as to define a passageway adapted to retain a first supply of settable material. In such an embodiment, each of the at least two panels (e.g., in one embodiment, **12**, **14**) further comprises a base flange (e.g. in one embodiment **94**, **98**) extending from each panel away from a passageway of the forming member, and a support member (e.g. in one embodiment, **96** and **100**) on an opposite side from the base flange with the support member extending away from the passageway. The support member further comprises a guide member (e.g. in one embodiment, **110** and **114**) adapted to alignably receive a base flange of another forming member when stacked on the forming member. In this way, the at least two panels are alignable with at least two panels of another forming panel. In addition, the forming system may have a configuration wherein each of the support members further comprises a support flange and a guide flange with the guide flanges of the support members being disposed in opposing spaced relation. In one example embodiment, such a configuration is similar to that described above with respect to FIG. **1**.

[0174] Moreover, each of the at least two panels (for example, items **12**, **14** in one possible embodiment) of the forming system are adapted to be disconnectable, after retaining the first supply of settable material to subsequently receive a second supply of settable material.

[0175] The forming system also preferably further comprises a plurality of forming members with the plurality of stacked forming members defining a wall of forming members defining a plurality of vertically-extending passageways for retaining a material. In one example embodiment, such a configuration is similar to that described above with respect to FIG. **1**.

[0176] In addition, in another possible embodiment, the forming system may also comprise at least two panels wherein each of the at least two panels comprises at least one interconnectable end defining a securable flange. The securable flange is preferably adapted to be interconnectable with a corresponding securable flange of another forming member. The forming system preferably further comprises an engagement component adapted to interconnect a securable flange (which in some embodiments, may form apertures adapted to be interconnected with other securable flanges by engagement components such as fasteners, connectors or the like) (as noted above and/or as noted in the embodiments explained hereinafter) of the forming member, with a corresponding securable flange of another forming member. It should be noted that in some embodiments the securable flanges may be slotted, however in other embodiments the securable flange may not be slotted. Moreover, in some embodiments, the engagement component may have a configuration similar to the engagement member described in the various embodiments described above and as follows; however, in other embodiments, the engagement component may have an unslotted configuration or some other different configuration adapted for securing the securable flange and corresponding securable flanges together. Such securing structures may comprise structures as described earlier herein or hereinafter or they may comprise clamping or vice grip-like devices, threaded or unthreaded fasteners, as well as other suitable securing systems and devices known in the art.

[0177] In one other embodiment, the forming system comprises a forming member comprising at least two panels in spaced relation so as to define a passageway adapted to retain a first supply of settable material. In such an embodiment, and in view of the interconnectable ends shown in FIG. **1**, each of the at least two panels further comprises at least one intercon-

nectable end defining an interconnectable element forming an interengageable slot, similar, in one embodiment, to the configuration shown in FIG. **1** (e.g., item **18**, etc.), with the interconnectable element adapted to be interconnectable with at least one other forming member. The forming system preferably further comprises an engagement member forming an interconnection slot, similar, in one embodiment, to that shown in FIG. **4** (e.g., item **68**, etc.), with the engagement member receivable by both an interengageable slot of an interconnectable element of a given forming member and an interengageable slot of an interconnectable element of the at least one other forming member. With these features, the given forming member and the at least one other forming member may be interconnected and a plurality of forming members having selected configurations may be interconnected and stacked (e.g., see FIG. **5**, showing one possible embodiment).

[0178] With this configuration and in view of other various features as noted herein, a plurality of walls of forming members may be interconnected so as to form at least a portion of an enclosure. Such an enclosure may be a shed, well or pool house, garage, home or addition, wall, or other building structure.

[0179] The forming system, in another possible embodiment also preferably comprises a forming member further comprising at least one spacer connector comprising a spacer element and a reusable connector, with the at least one spacer connector adapted to releaseably connect the at least two panels in spaced relation. The spacer connector and panels, in one example embodiment, have a configuration that is similar to that described above with respect to FIG. **1**. In addition, the forming system may also comprise various forming members with the at least two panels having desired shapes and configurations so as to define a passageway having a substantially non-linear configuration adapted to retain a settable material. In some embodiments, the at least two panels may be configured so as to define a passageway having a substantially 90-degree configuration or a substantially T-shaped configuration as noted above adapted to retain a settable material.

[0180] In one other possible embodiment, the forming system may comprise an alternate forming member configured such that a first end comprises a pair of interconnectable ends **18**, **30** (with or without slots) of a forming member **10** as shown in FIG. **1**. However, the second end comprises a pair of "flanged" interconnectable ends similar to the flanged interconnectable ends **180**, **182** shown in FIG. **10**—and mounted at the distal edges of panel **274**.

[0181] With such a configuration, a pair of interconnectable ends **18**, **30** of an alternate forming member would not need a specially configured interconnectable element defining an interengageable slot (like that shown in FIG. **1**). With a configuration similar to that described with respect to FIG. **10**, the flanged interengageable ends **180**, **182** mounted on the second end of the alternate forming member would be adapted to be positioned above the interconnectable ends **18** and **30** respectively of the first end of another alternate forming member. The flanged interconnectable ends **180**, **182** would then be slidable over—and connectable with—the interconnectable ends **18**, **30**. In this way, a first alternate forming member could be connected in place immediately adjacent to another similarly configured second alternate forming member to continue a formed up passageway.

[0182] In addition, it will be appreciated that the above configuration is specially configured such that the first and second ends of two adjacent "alternate" forming members may be interconnected—without the use of an engagement member.

[0183] In other words, in one possible embodiment, a forming member preferably comprises a first end which comprises a pair of interconnectable ends, ears or securable flanges (e.g., configured similar to **18**, **30** of forming member **10** but without defining any interengageable slots), protruding away from the passageway and being disposed substantially orthogonally with respect to its panel. The second end of the forming member may comprise a pair of different but corresponding flanged interconnectable ends (configured somewhat similar to flanged interconnectable end **280** (shown in FIG. **10**), comprising a similar pair of spaced interengageable flanges **284**A, **284**B and configured somewhat similar to flanged interconnectable end **282** comprising a similar pair of spaced interengageable flanges **286**A, **286**B). On each panel of the forming member, each of the corresponding flanged interconnectable ends may be disposed so as to preferably protrude substantially orthogonally away from the passageway and its respective panel. With this alternate configuration, corresponding flanged interconnectable end (similar to **280**) preferably comprises a pair of spaced interengageable flanges (similar to **284**A, **284**B) and corresponding flanged interconnectable end (similar to **282**) preferably comprises a pair of spaced interengageable flanges (similar to **286**A, **286**B)—mounted on a forming member rather than an end panel (e.g., **272**). In a similar manner as described with respect to FIGS. **1** and **10** (and in one embodiment similar to the "alternate" forming members above) it will be appreciated that the interengageable flanges are specially configured such that they may be interconnected to the interconnectable ends of an adjacent forming member—without the use of an engagement member. That is, a forming member with this configuration, has a first end with interconnectable ends similar to those shown in FIG. **1** (e.g., **18**, **30**) and a second end with corresponding flanged interconnectable ends similar to those shown in FIG. **10** (e.g., **280**, **282**). In addition, the first or second ends could be offset or angled or mounted in such a way as to foster a tighter connection between the adjacent forming members.

[0184] Thus, in view of the versatility and configurability of the forming member, in a possible embodiment, forming member **10** may include at least one but preferably two interconnectable ends with each interconnectable end defining a securable element or flange—with or without a slotted configuration. However, in another example embodiment, each of the securable elements, may, for instance, define, form, and/or comprise an interengageable slot, respectively or other securable structure. Each interconnectable end may also define a securable flange or other element and each of the securable elements, in one example embodiment, may, for instance, define, form, and/or comprise an interengageable slot respectively.

[0185] In one other possible embodiment, a forming member comprises at least two reusable panels with each panel being of one-piece construction comprising at least one of sheet metal or plastic. The forming member further preferably comprises at least one spacer connector (in one embodiment, similar to that described with respect to FIG. **1**) comprising a spacer element and a connector with the at least one spacer connector adapted to releaseably connect the at least two reusable panels in spaced relation so as to define a passageway. Each of the at least two reusable panels preferably

also comprises at least one interconnectable end adapted to be interconnectable with a securable flange of another forming member. The interconnectability of various such forming members may, in some example embodiments, have interconnectable ends configured in the same manner as those described with respect to FIG. **1** (or as other embodiments herein). In addition, in one other embodiment, each of the at least two reusable panels further comprises a base flange and a support member. (In some embodiments, the support member of the forming member is preferably adapted to alignably receive a base flange of another forming member, if stacked on the forming member). Moreover, in such an embodiment, each of the at least two panels, the at least one interconnectable end defining a securable flange, the base flange, and the support member are integrally formed from a unitary structure. (In some embodiments, such a unitary structure may be similar to that described with respect to FIG. **6**C above). In another possible embodiment, the forming member also may further comprise at least one spacer connector with at least one corresponding aperture formed in the unitary structure for receiving at least a portion of the spacer connector. The spacer connector may also comprise a spacer element and a reusable connector with the reusable connector comprising a threaded fastener tightenable by hand. (Such an embodiment may be similar to that described with respect to other forming members herein).

[0186] Referring now to FIGS. **1**, **2**, **5-11** and **14**, it will also be appreciated that the apertures formed in the various panels may be located at any desired position such that the spacer connectors may be selectively installed within a given passageway (e.g., **16**, **316**, **178**, **238**) at any desired location. For example, it may advantageous to locate the spacer connectors near the top of a forming member so that it could be used to aid in supporting or anchoring or securing some structure.

[0187] In addition, in some embodiments, the panels may form only a single complementary pair of apertures to accommodate only one selectively located spacer connector. As noted above, in other example embodiments, a pair of panels may not have any apertures formed therein and the panels may be held in spaced relation when interconnected to an adjacent forming member being secured in spaced relation by spacer connectors (or end forming members or end panels). For example, spacer connectors may only be installed in every other interconnected forming member.

[0188] The foregoing disclosure and description of the invention is illustrative and explanatory of presently preferred embodiments of the invention and variations thereof, and it will be appreciated by those skilled in the art, that various changes in the design, organization, order of operation, means of operation, equipment structures and location, methodology, the use of mechanical equivalents, such as different types of spacer connector components, spacer devices, adjacent forming member connectors than as illustrated whereby different steps may be utilized, as well as in the details of the illustrated construction or combinations of features of the various elements may be made without departing from the spirit of the invention. As well, the drawings are intended to describe the concepts of the invention so that the presently preferred embodiments of the invention will be plainly disclosed to one of skill in the art but are not intended to be manufacturing level drawings or renditions of final products and may include simplified conceptual views as desired for easier and quicker understanding or explanation of the invention. As well, the relative size and arrangement of the components may be varied from that shown and the invention still operate well within the spirit of the invention as described hereinbefore and in the appended claims. Thus, various changes and alternatives may be used that are contained within the spirit of the invention.

[0189] Because many varying and different embodiments may be made within the scope of the inventive concept(s) herein taught, and because many modifications may be made in the embodiment(s) herein detailed in accordance with the descriptive requirements of the law, it is to be understood that the details herein are to be interpreted as illustrative of a presently preferred embodiment and not in a limiting sense.

What is claimed is:

1. An apparatus for retaining a conformable material, the apparatus comprising:

a forming member comprising at least two panels connected in spaced relation so as to define a passageway adapted to retain a first supply of conformable material, which hardens in place;

wherein each of the at least two panels further comprises at least one interconnectable end defining an interconnectable element forming an interengageable slot, the interconnectable element adapted to be interconnectable with at least one other structure; and

wherein the at least two panels are adapted to be disconnectable after use to subsequently receive a second supply of conformable material, which hardens in place.

2. The apparatus of claim **1**, wherein the at least one other structure comprises at least one other forming member, and further comprising an engagement member forming an interconnection slot, the engagement member receivable by both an interengageable slot of an interconnectable element of a given forming member and an interengageable slot of an interconnectable element of the at least one other forming member, wherein the given forming member and the at least one other forming member may be interconnected.

3. The apparatus of claim **2**, wherein a plurality of forming members are selectively configurable and interconnectable in a desired arrangement, and wherein at least a portion of an enclosure may be constructed from the forming members, the forming members defining a plurality of passageways for retaining the conformable material.

4. The apparatus of claim **1**, wherein each of the at least two panels further comprises a base flange and a support member.

5. The apparatus of claim **4**, wherein the at least one other structure comprises at least one other forming member, wherein the support members of a given forming member cooperate to alignably receive the base flanges of the at least one other forming member when stacked on the given forming member, and wherein a plurality of stacked forming members would define a wall of forming members defining a plurality of vertically-extending passageways to retain the conformable material.

6. The apparatus of claim **5**, wherein each of the support members further comprises a support flange and a guide flange, the guide flanges of the support members being disposed in opposing spaced relation.

7. The apparatus of claim **4**, wherein each support member is disposed at least in part proximate a top edge of a respective panel with each support member being oriented substantially orthogonal with respect to the panel so as to reinforce the panel.

8. The apparatus of claim **1**, wherein the forming member further comprises at least one spacer connector comprising a

spacer element and a reusable connector, the at least one spacer connector adapted to releaseably connect the at least two panels in spaced relation.

9. The apparatus of claim **8**, wherein the spacer element is adapted to be selectively sized in relation to a desired form object, wherein the at least two panels may be releaseably connected so as to removeably capture a desired form object within the passageway.

10. The apparatus of claim **1**, wherein the at least two panels are configured so as to define a passageway having a substantially non-linear configuration adapted to retain a conformable material.

11. The apparatus of claim **1**, wherein at least three panels are configured so as to define a passageway having a substantially T-shaped configuration adapted to retain a conformable material.

12. The apparatus of claim **1**, further comprising a contour member being mountable within the passageway, the contour member having a selected surface contour facing the interior of the passageway.

13. A forming system for retaining a material, the forming system comprising:

a forming member comprising at least two panels in spaced relation so as to define a passageway adapted to retain a first supply of settable material;

wherein each of the at least two panels further comprises a base flange extending from each panel away from the passageway, and a support member on an opposite side from the base flange, the support member extending away from the passageway, wherein the support member further comprises a guide member adapted to alignably receive a base flange of another forming member when stacked on the forming member, wherein the at least two panels are alignable with at least two panels of said another forming panel; and

wherein the at least two panels are adapted to be disconnectable after retaining the first supply of settable material to subsequently receive a second supply of settable material.

14. The forming system of claim **13**, wherein each of the at least two panels comprises at least one interconnectable end defining a securable flange, the securable flange adapted to be interconnectable with a corresponding securable flange of another forming member, and further comprising an engagement component adapted to interconnect a securable flange of the forming member, with a corresponding securable flange of another forming member.

15. The forming system of claim **13**, wherein each of the at least two panels further comprises at least one interconnectable end defining an interconnectable element forming an interengageable slot, the interconnectable element adapted to be interconnectable with at least one other forming member, and further comprising an engagement member forming an interconnection slot, the engagement member receivable by both an interengageable slot of an interconnectable element of a given forming member and an interengageable slot of an interconnectable element of the at least one other forming member, wherein the given forming member and the at least one other forming member may be interconnected, wherein a plurality of forming members having selected configurations that may be interconnected and stacked, and wherein a plurality of walls of forming members may be interconnected so as to form at least a portion of an enclosure.

16. The forming system of claim **15**, and further comprising at least one spacer connector comprising a spacer element and a reusable connector, the at least one spacer connector adapted to releaseably connect in spaced relation each of the at least two panels of at least one of the forming members.

17. The forming system of claim **13**, wherein the at least two panels are configured so as to define a passageway having a substantially non-linear configuration adapted to retain a settable material.

18. The forming system of claim **13**, wherein at least three panels are configured so as to define a passageway having a substantially T-shaped configuration adapted to retain a settable material.

19. The apparatus of claim **13**, further comprising a support connector having a portion insertable through a spacer element captured within a formed wall, the support connector comprising a fastener element and at least one support element, wherein the at least one support element is adapted to be secured proximate at least one surface of a formed wall.

20. A unitary structure reusably combinable with other unitary structures to create forms to receive settable material, which comprises:

a panel;

at least one integrally formed interconnectable end defining a securable element;

a base flange integrally formed at a first peripheral edge of the panel; and

a support member integrally formed at a second peripheral edge of the panel, the panel, at least one integrally formed interconnectable end, base flange, and support member being of one-piece construction and comprising at least one of sheet metal or plastic.

* * * * *