March 13, 1934. S. D. LOCKE ET AL 1,951,158

GOLF BAG

Filed April 29, 1929 4 Sheets-Sheet 1

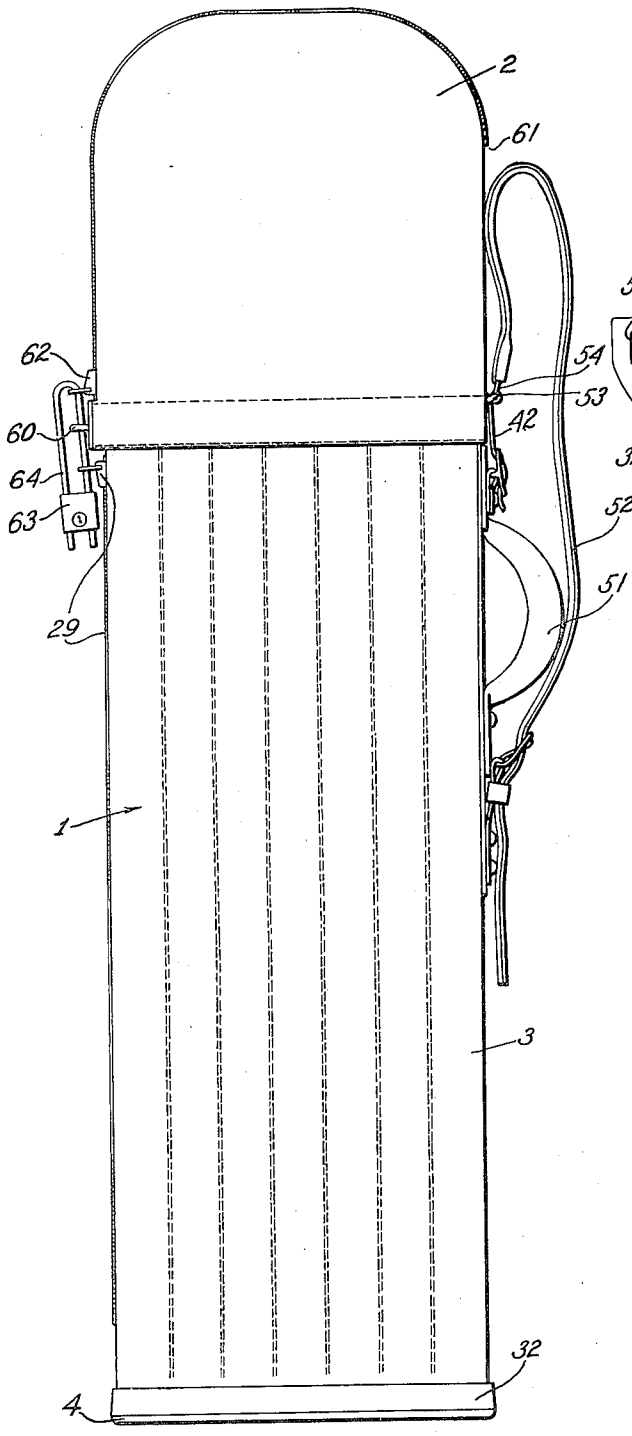

Fig. 1

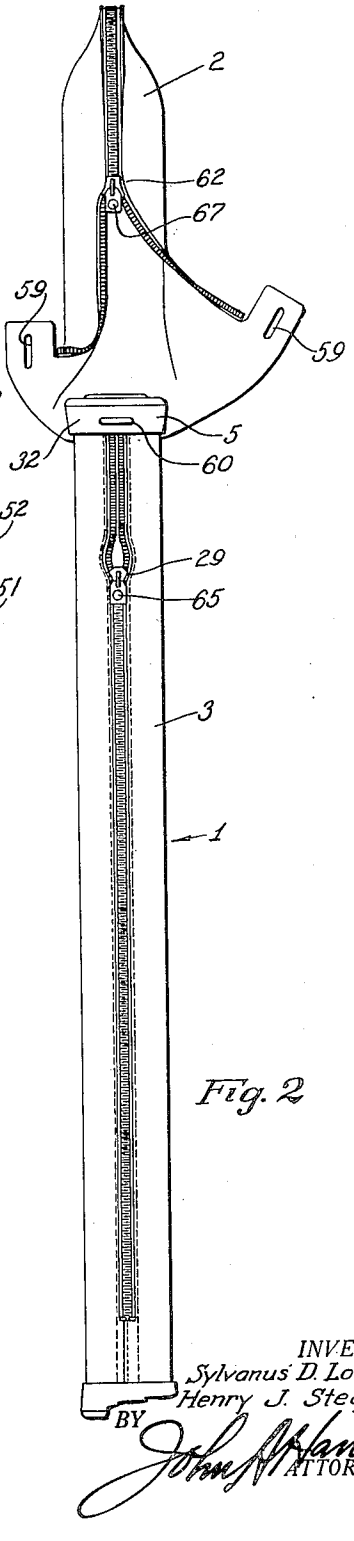

Fig. 2

INVENTORS
Sylvanus D. Locke and
Henry J. Stegeman,
BY
ATTORNEY.

March 13, 1934. S. D. LOCKE ET AL 1,951,158

GOLF BAG

Filed April 29, 1929 4 Sheets-Sheet 2

Fig. 3

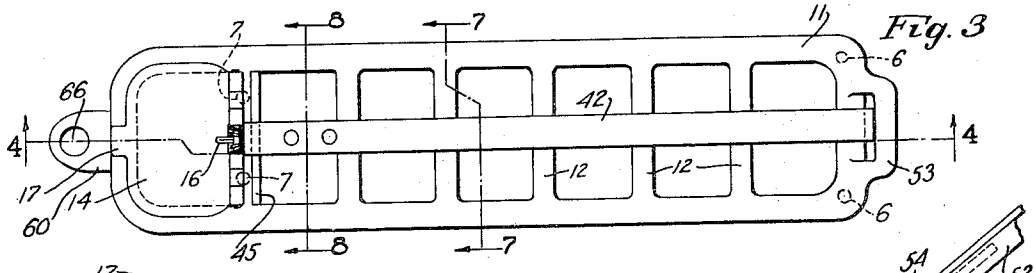

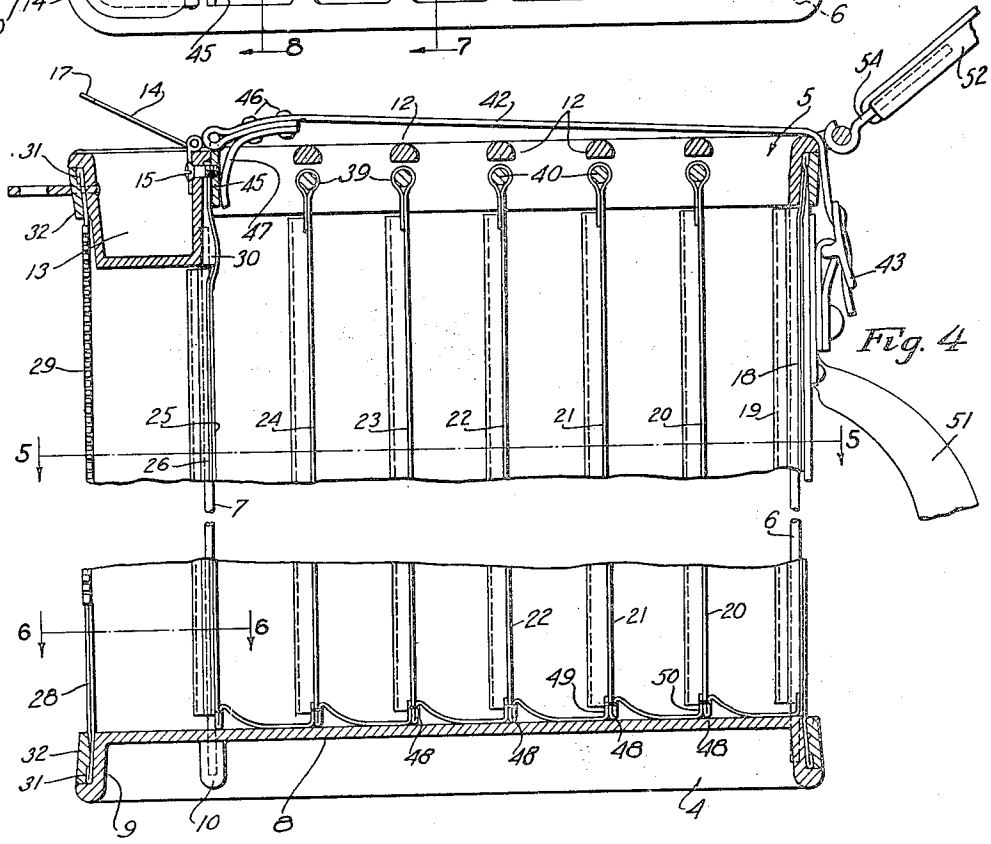

Fig. 6

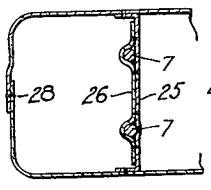

Fig. 5

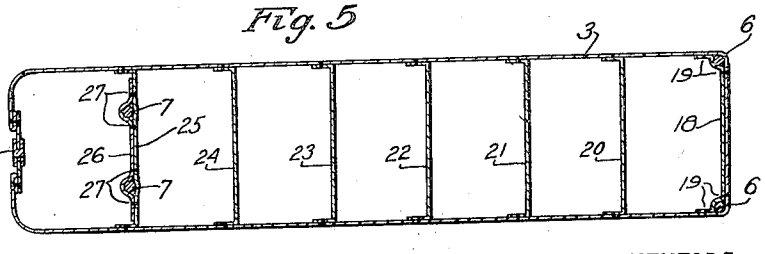

INVENTORS.
Sylvanus D. Locke and
Henry J. Stegeman.
BY
John J. Hanrahan
ATTORNEY.

March 13, 1934. S. D. LOCKE ET AL 1,951,158

GOLF BAG

Filed April 29, 1929 4 Sheets-Sheet 3

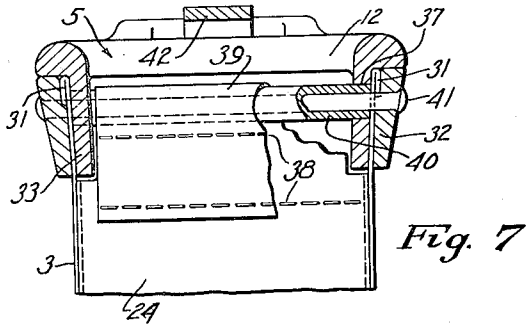

Fig. 7

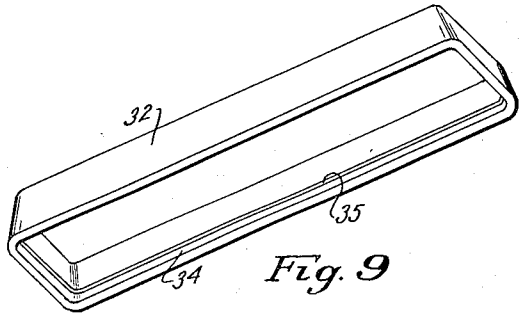

Fig. 9

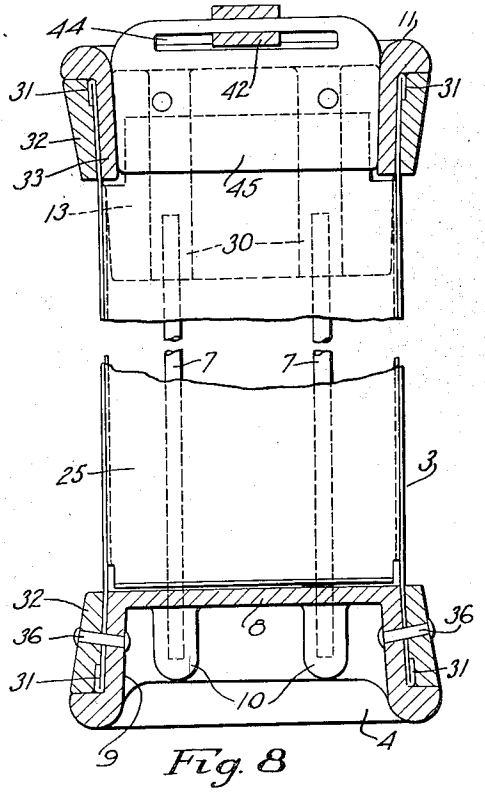

Fig. 8

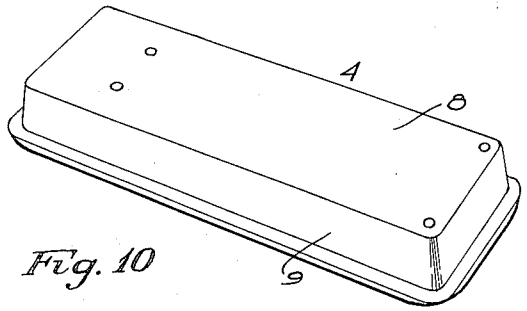

Fig. 10

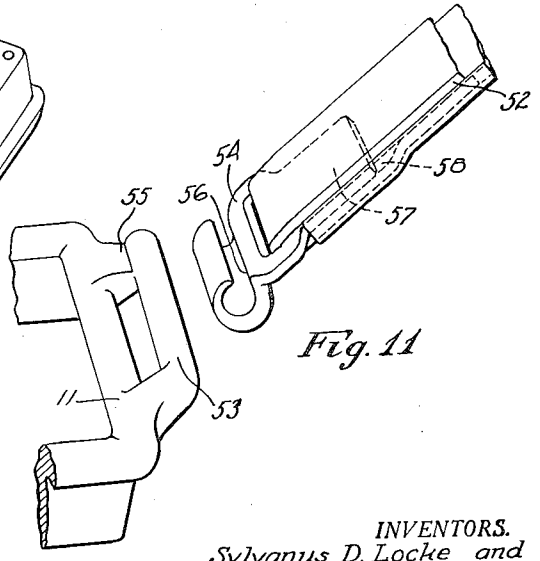

Fig. 11

INVENTORS.
Sylvanus D. Locke and
Henry J. Stegeman
BY John J. Hanrahan
ATTORNEY.

March 13, 1934. S. D. LOCKE ET AL 1,951,158

GOLF BAG

Filed April 29, 1929 4 Sheets-Sheet 4

Fig. 12

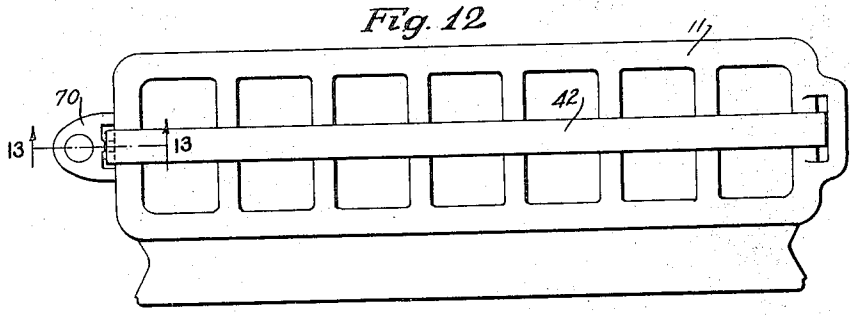

Fig. 13

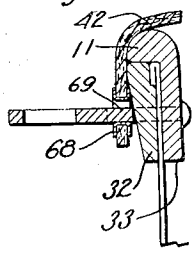

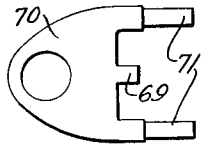

Fig. 14

Fig. 15

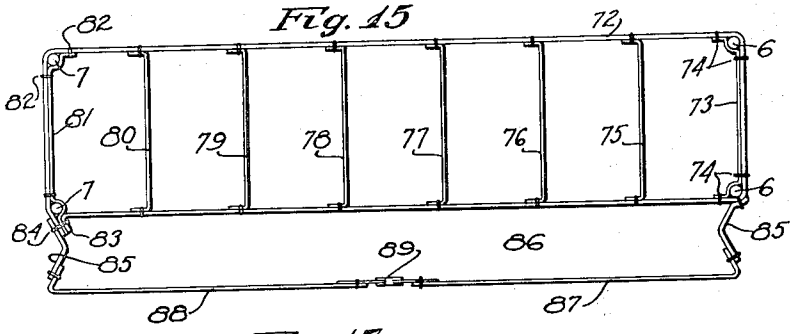

Fig. 17

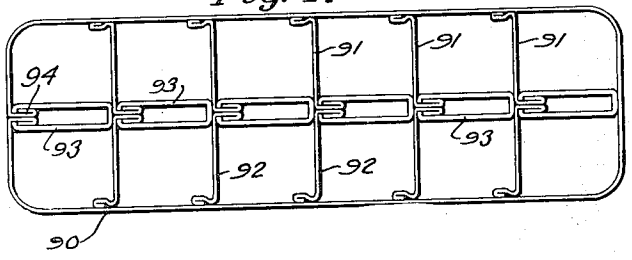

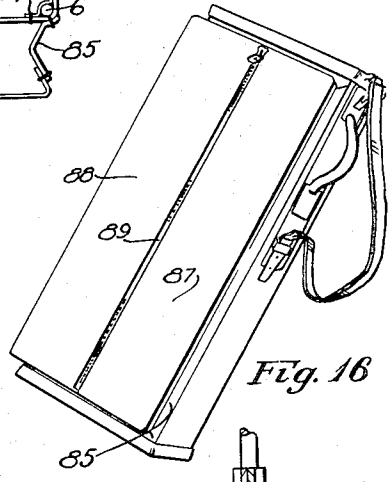

Fig. 16

Fig. 19

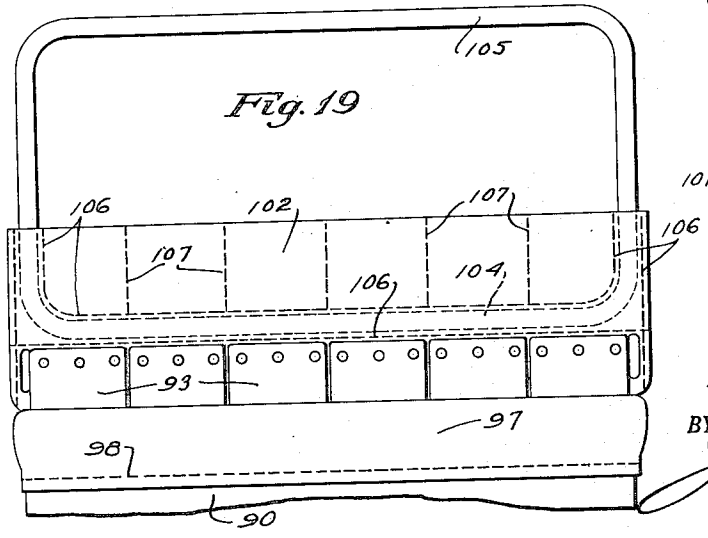

Fig. 18

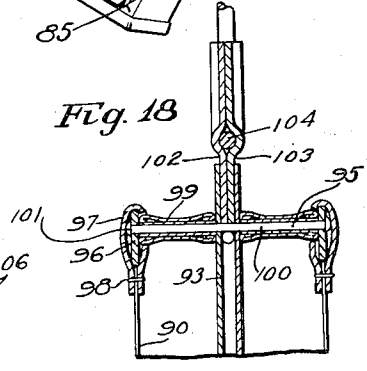

INVENTORS.
Sylvanus D. Locke and
Henry J. Stegeman.
BY
ATTORNEY.

Patented Mar. 13, 1934 1,951,158

UNITED STATES PATENT OFFICE

1,951,158

GOLF BAG

Sylvanus D. Locke, Bridgeport, and Henry J. Stegeman, Fairfield, Conn.

Application April 29, 1929, Serial No. 359,091

15 Claims. (Cl. 150—1.5)

This invention relates to new and useful improvements in receptacles and has particular relation to that type of receptacle or carrier known as a golf bag.

An object of the invention is to provide a golf bag having individual pockets for the reception of golf clubs.

A further object is to provide a flat golf bag which is easy to carry and which may readily be slipped beneath a Pullman seat when traveling.

Another object is to provide a flat golf bag provided with a double row of individual pockets.

An additional object is to provide a flat golf bag including a light rigid frame whereby the bag will stand alone.

Another object is to provide means for dividing a golf bag into a series of rows of pockets without adding to the thickness of the bag.

A further object is to provide a golf bag into which is built a tee carrying box.

Yet another object is to provide a golf bag having a tee box built into its upper portion and including a pocket disposed beneath said tee box and extending for the remainder of the length of the bag.

Another object is to provide a golf bag including a covering or body portion formed of a single length of material, the ends of which are connected by a "zipper" fastener.

A still further object is to provide a golf bag including rigid top and bottom frame members between which is arranged a flexible body portion, the edges of the body portion being hemmed and clamped to the frame members by a means engaging the hem.

An additional object is to provide a golf bag including novel means dividing it into pockets, each adapted to receive a golf club.

A further object is to provide a novel method of making golf bags, whereby to eliminate exposed seams.

Another object is to provide a novel means of fastening the shoulder strap of the golf bag.

A further object is to provide a novel hood for a golf bag and a novel means for removably securing the hood to the bag when desired.

Other objects and advantages will become apparent from a consideration of the following detailed description taken in connection with the accompanying drawings, wherein we have shown satisfactory embodiments of the invention. While this description and the accompanying drawings are specific to details of construction, combination and arrangement of parts, it is to be understood that reference must be had to the annexed claims for a definition of the limitations of the invention.

In the drawings:—

Fig. 1 is an elevational view showing the complete golf bag, the hood being in position and closed;

Fig. 2 is a front view, the hood being partially open;

Fig. 3 is a plan view, the hood and shoulder strap being omitted;

Fig. 4 is a vertical sectional view on the line 4—4 of Fig. 3;

Fig. 5 is a transverse sectional view on the line 5—5 of Fig. 4;

Fig. 6 is a similar view on the line 6—6 of Fig. 4;

Fig. 7 is a sectional view on the line 7—7 of Fig. 3;

Fig. 8 is a similar view on the line 8—8 of Fig. 3;

Fig. 9 is a perspective view showing the clamping ring or frame;

Fig. 10 is a similar view showing the bottom of the bag;

Fig. 11 is a detail perspective view showing the securing means for the shoulder strap;

Fig. 12 is a plan view of a modification, the hood and shoulder strap being omitted;

Fig. 13 is a detailed sectional view on the line 13—13 of Fig. 12;

Fig. 14 is a plan view of the staple removed;

Fig. 15 is a horizontal sectional view of the form shown in Fig. 12;

Fig. 16 is a side elevational view of the bag shown in Figs. 12 and 15 but on a reduced scale;

Fig. 17 is a plan view of a further modification showing a modified form of dividing means;

Fig. 18 is a vertical transverse sectional view of the device shown in Fig. 17; and

Fig. 19 is a side elevation of the upper portion thereof.

Referring in detail to the drawings, at 1 is indicated generally, the golf bag forming the subject matter of this invention. 2 indicates the hood used with the various forms, although shown only in Figs. 1 and 2.

The outer surface of the golf bag 1, as perhaps best shown in Fig. 5, is formed of a single length of material such as leather, this material being designated 3, and being disposed about a framework comprising a base 4, a mouth piece or portion 5, and pairs of upright rods 6 and 7 connecting the bottom or base 4 and the mouth piece 5.

Base 4 comprises a plate 8 carrying a downwardly extending skirt portion 9 slightly tapered

on its outer surface as shown. Projecting from the lower face of the plate 8 are a pair of enlargements 10 connected to each other, and to the skirt portion 9 by a web and reamed to receive the lower ends of the rods 7. The rear corners of the base are also enlarged and reamed to provide pockets for the lower ends of the rods 6.

The mouth piece 5 is shown as a casting and includes a substantially rectangular frame 11 provided with transverse bars 12 dividing the mouth piece into a plurality of openings, six being shown. At one end, where there might otherwise be provided another opening or compartment, a tee cup 13 is provided in the frame, a hinged cover 14 for the cup being secured as by means of screws 15, the cover being normally maintained closed by means of the spring 16. A small finger piece 17 is provided for opening the cup, and when the cup is closed, this finger piece 17 occupies a notch in the upper surface of the frame 11.

When applying the cover or body portion 3 to the frame it is doubled about the spaced rods 6 and sewed to them by inserting a piece of fabric or the like 18 and stitching along the lines 19 at each side of the uprights or rods, thus forming pockets in which the rods are disposed.

Next, in the process of making the bag, transverse strips 20, 21, 22, 23, 24 and 25 are sewed to the body 3, the strips being sewed in place in the order named, that is, first the strip 20, then the strip 21, and so on through, the strip nearest to the closed edge being sewed first, since otherwise, it would be difficult or impossible to sew the strips in place.

As clearly shown, the strip 25 is disposed against the upright rods 7 and the body is secured to these rods by placing a piece of fabric 26 over them and sewing at each side of the rods, as shown at 27, the stitches passing through fabric 26 and partition or strip 25. This forms a pocket for the rods. Beyond the rods, the ends of the fabric are overlapped and sewed together for a slight distance from their lower edges, as shown at 28, Figs. 4 and 6, but for substantially the entire length of the bag, these ends are secured together by a separable fastening means, a "zipper" fastening means 29 being shown and at present, preferred for this purpose. This "zipper" fastening means 29 closes a pocket extending from the bottom of the tee pocket 13 to the base member 4 and comprises parts secured to each edge or end of the fabric and a slide shiftable to draw said parts together. Of course, any other type of quickly operable fastening means may be employed. The inner limit of the pocket is defined by strips 25 and 26 and rods 7. Rods 7 are relatively close together and will prevent golf balls or other objects from pushing strips 25 and 26 inwardly in such a manner as to interfere with the insertion and removal of golf clubs into and from the next adjacent compartment.

It is to be noted that the upper ends of the rods 7 are disposed in bosses 30 at the inner edge of the tee cup 13, and that the strip 25 follows these rods, and at its upper end is clamped against the inner side of the tee cup. Rods 6 at their upper ends are received in enlargements formed in the corners of the frame 11 for that purpose.

To assist in securing the edges of the body portion 3 to the mouth piece 5 and to the base 4, these edges are hemmed as at 31 and clamping members 32 are provided, these members being shaped to fit over the skirt portion 9 of the base and over the skirt portion 33 of the mouth piece 5. Further, these clamping members 32 are cut away as at 34 to provide space for receiving the hemmed edges of the body portion 3 and to provide shoulder 35 to engage these hems and prevent the body portion from being drawn from between the base and its respective clamping member 32, and the mouth portion and its respective clamping member 32.

As additional means for securing the lower clamping member in place, rivets 36 are passed through it and the skirt portion 9 of the base and through that part of the body portion 3 which is disposed between the clamping member and base member.

A different securing means is provided at the top or mouth piece of the bag. The skirt 33 of the mouth portion is provided with pairs of aligned openings 37, the pairs of openings being disposed below the cross-bars 12 and in vertical alignment with these cross-bars. At their upper ends, the transverse strips 20, 21, 22, 23 and 24 are doubled upon themselves and sewed as at 38 to provide loops 39 through which tubes 40 are passed, the ends of these tubes being received in the openings 37 in the skirt of the mouth portion 5. Passing through tubes 40 and through the upper clamping member 32 and that part of the body portion which is disposed between the upper clamping member and the skirt portion 33 of the mouth piece, are rods or rivets 41, having their ends upset as shown for securely tying the parts together.

Due to this particular arrangement for securing the upper ends of the transverse strips, they project beyond the edges of the bars 12 and being looped and disposed over the tubes 40, there is not any likelihood of their being torn loose and thus interfering with the insertion and removal of golf clubs. Further, since they project beyond the bars 12, they will serve to prevent the handles of golf clubs coming into contact with the bars during insertion and removal of the clubs and thus the club handles will not be subject to abrasive action with bars 12.

It will now be clear that the frame 11 and strips 20, 21, 22, 23, 24 and 25 divide the golf bag into a number of different compartments. Each of these compartments is wide enough to receive two golf clubs arranged side by side. For the purpose of keeping the clubs in order with their heads projecting from the side of the pockets into which the club has been inserted, in order that the player will have no difficulty in locating the club he desires to use at any particular time, a strap 42 is employed. At one end this strap is secured by means of a buckle 43 disposed below the mouth portion 5. At its other end, strap 42 is passed through an elongated slot 44 in a plate 45 and doubled upon itself and secured as by rivets 46. As will be clear from Fig. 8, the slot 44 is of considerably greater length than the width of the strap 42.

Owing to this structure, and to the fact that the opposite end of the strap is fastened below the surface of the mouth piece, the strap may be pushed from side to side to facilitate the insertion or removal of golf clubs, it being understood that there is not sufficient space at each side of the strap 42 for the handle of a club to pass, although there is sufficient room to accommodate the lower shank of the club. In order that the strap may be pushed from side to side with the handle of the club, the strap is kept projected above the cross-arms or bars 12 by means of a strap 47 of relatively stiff leather or

the like contacting with the plate 45. In connection with the plate 45, it is to be noted that the upper end of the transverse strip 25 is clamped against the tee cup 13 by plate 45, and that plate 45 is held in place by the screws 15 which secure the tee cup cover 14 in place.

At their lower ends, the transverse strips 20 through 25, are doubled upon themselves as at 48 and the end of each strip is sewed to the doubled portion of the next succeeding strip as for example, the end 49 of strip 22 is sewed to the doubled portion 48 of strip 21 and the end 50 of strip 21 is sewed to the doubled portion 48 of strip 20.

The bag is provided with a handle 51 and a shoulder strap 52. The frame 11 of the mouth portion is provided with or has cast with it a staple member 53 to which is removably hooked the member 54 for securing one end of the shoulder strap 52. This securing means is detailed in Fig. 11 and as shown there, the staple 53 is notched as at 55 whereby the member 54 may be secured to the staple 53 by sliding action beginning at the notch side of the staple when the member 54 is so positioned relative to the staple that its free edge 56 aligns with the notch 55 in the staple. Whenever the edge 56 and the notch 55 are in alignment, member 54 may be connected to or disconnected from the staple by simple sliding action. To prevent casual displacement, member 54 is provided with a wide tongue portion 57 disposed between the doubled portions 58 of the shoulder strap 52 whereby there is no casual turning movement of member 54 to align its edge 56 with the notch 55, unless the strap 52 is deliberately manipulated and turned up for that purpose.

In addition to functioning as a means for securing the shoulder strap, the staple 53 and the member 54 co-operate in securing the hood 2 in position. The hood 2 is provided at its rear side with a slot large enough for the staple 53 to pass through. When it is desired to put the hood in place as shown in Fig. 1, the shoulder strap is disconnected from the staple 53, the hood placed in position with the staple passing through the before mentioned slot and at its forward lower edges, the hood is provided with a pair of slots 59 shaped to pass over a staple 60 carried at the front end of the frame member 11. As shown, the hood may be substantially entirely opened, since it is closed by a "zipper" from the point 61 over its top and down its front side. After the staple 60 has been passed through the openings 59, the "zipper" 62 is manipulated to close the hood and if desired, a lock 63 with a long shackle 64 may be passed through the opening 65 in the "zipper" 29, through the opening 66 in the staple 60, and through the opening 67 in the "zipper" fastener 62, all as shown in Fig. 1.

In Figs. 12 through 16 a modification of the invention is shown. Here the tee pocket is omitted and the strap 42 is carried entirely across the frame 11. The end of the strap which was secured by the plate 45 in that form of the invention previously described, is, in this figure, perforated and provided with a grommet 68 disposed over a stud 69 carried by a staple 70. As shown, there is sufficient room at each side of the stud 69 to permit the strip to rock in order that it may be pushed from one side to the other of the center of the frame for the purpose stated in connection with the previously described forms of the invention. At either side of the stud 69 the staple 70 is provided with an arm 71 adapted to be passed through the skirt portion 33 of the frame 11 and used as a rivet for the purpose of connecting the upper clamping member 32 to the frame.

Also, in the form of the invention shown in Figs. 12 through 16, the pocket is provided at the side of the golf bag. This pocket is substantially as large as the side of the bag. As perhaps best shown in Fig. 15, the body portion of this bag is disposed about vertical pairs of rods 6 and 7. This body portion is formed of one piece of material 72, the same being doubled about the rods 6 and secured thereto by a strip 73 stitched to the body portion along the lines indicated at 74 at each side of the rods. Transverse partitions are provided between the side walls of the body portion, these partitions being numbered 75, 76, 77, 78, 79 and 80, and the partition 75 being sewed in place after the material 73 is in place and the strip 76 following the strip 75 on through until all the strips are in place.

It is necessary that these strips be secured in place in the order named, since otherwise it would be difficult or impossible to use a machine for the purpose of securing them. For the purpose of securing the body portion to the rods 7, a piece of material 81 is employed and is stitched to the body portion as shown at 82 at each side of the rods thereby forming pockets for them. The extreme ends of material are brought together as at 83 and stitching 84 passed through them and through a strip 85 which forms the sides, the bottom and the top of the pocket 86. Along one edge this strip 85 is secured to the body of the bag and to its free edges are secured closure members 87 and 88, these members forming parts of the pocket 86. Adjacent edges of the members or closure sections 87 and 88 are secured together by a "zipper" fastening means 89.

A still further modification of the invention is shown in Figs. 17, 18 and 19. Here, each of the pockets or compartments of the previous figures is divided so as to form entirely independent compartments, one for each golf club. In this form of the invention, the body portion 90 is of a single length of material and has strips 91 and 92 sewed to it in such positions that when the body portion 90 is folded upon itself, as best shown in Fig. 17, pairs of the strips are arranged opposite each other. At their free vertical edges, these strips are hemmed and each one extends about half the width of the bag and the free edge portions are doubled at right angles to their main portions, the edge portion of strips 91 being arranged in abutting relation to the edge portion of strip 92, this being clearly shown in Fig. 17.

Further, with this form of the invention, means are shown for separating the clubs in one row of compartments or pockets from those in the other row. Also means are provided for protecting the clubs and particularly wooden clubs, when traveling.

The means for the first means includes two pieces of leather, 102 and 103 partially inserted in the upper ends of the dividing means 93 and riveted to the means and project above them as clearly shown by Figs. 18 and 19.

Disposed between the pieces 102 and 103 and just above the dividing means 93 is one arm 104 of a rectangular frame 105. The pieces 102 and 103 are sewed together along the lines 106, whereby to secure frame 105 in place, and the pieces are also stitched along the lines 107 for the purpose of adding rigidity to the pieces.

By means of the leather pieces 102 and 103, the clubs in the two rows are kept separated, and through the employment of loop or frame 105, wooden clubs are protected especially when the hood 2 is on the bag, and it is to be shipped. The frame 105 is of such size that the heads of the wooden clubs would be within the frame and protected by its upper arm.

For the purpose of securing all these free edge portions of strips 91 and 92 together, and further for the purpose of forming individual compartments, metal clamping and dividing means 93 are provided. These dividing means 93 are substantially U-shaped in transverse section and extend substantially the entire length of the bag. Their free edges are turned inward in such a manner as to enclose the seamed edges of the strips 91 and 92, the dividing member 93 being placed in operative position by sliding movement with the hemmed edges of the strips 91 and 92 between the side walls of the dividing members.

Since the same means is employed for forming each of the compartments, no further description of the means for that purpose will be given. However, it is to be noted that the ends of the body portion 90 are also seamed and turned inwardly in abutting relation with the seams facing oppositely, as shown at 94, and these ends are secured together by means of a dividing means or member 93. Members 93 are preferably made of aluminum because of its lightness, although at the same time, the members must be comparatively rigid. To prevent a displacement of the members 93, and also to prevent their closed edges from moving out of position, rods 95 are passed through them from one side edge of the bag to the other side edge thereof.

In this form of the invention (see Fig. 18) the upper edge of the body portion is secured to a frame member 96 by means of a mounting piece 97 which encloses the frame 96 and embraces the upper edges of the body portion 90 being secured to the latter edge at 98. In the modification being described, the upper edges of the strips 91 and 92 are formed into loops 99 through which are passed pins 100 having its ends up-set as at 101 against the outer sides of frame member 96.

In use, the golf bag of the present invention has many advantages. Primarily, it enables a golfer to maintain his clubs in desired order. When he has a full bag of clubs, there is but one space to return a club after it is used, and thus the clubs are automatically maintained in desired order. This also makes it easier to find the desired club when about to play.

In connection with the use of strap 42, attention is directed to the fact that due to the use of this means of dividing the bag, no additional width is added to the bag. With this arrangement, there is no occasion for a longitudinal partition within the bag.

Further, the separating of the clubs prevents the handles from becoming crossed, and when a club is withdrawn and replaced, there is no abrasive action between the club handles resulting in the wearing of the cord or other means wrapped about the handles, to assist the user in getting a good grip.

Since the bag is flat, it is easily carried under the arm, and when traveling, may be slipped under the seat of a Pullman, or otherwise stored in a small space.

Also, the hood is so constructed that it may remain on the bag and be only partially opened, should the bag be used on a rainy day, and the hood may be closed while traveling from one point of play to the next. Should it be desired to remove the hood, it may be placed in the pocket of the bag. The hood may be easily and quickly applied and removed, and owing to the particular arrangement of fasteners for the hood and pocket, a single lock may be used for securing the bag closed when traveling.

Owing to the method of forming the bag, outside or exposed seams are avoided. Further, after the last partition 25 is in place, it would be difficult or impossible to sew the end portions of the body 3. This is due to the fact that there is such a long narrow space to work in. In the present instance, the occasion for sewing is eliminated by using the zipper fasteners.

Having thus described the invention, what we claim is:—

1. A golf bag including a rigid frame member at the mouth of the bag, a tee box formed with said frame, and a pocket formed in that portion of the bag beneath the tee box and extending substantially the length of the bag.

2. A golf bag including top and bottom frame members, a flexible body portion arranged between said members, the edges of said body portion being hemmed, and clamping means for securing the edges to the frame members and including shoulder portions to engage the hems and prevent said edges being pulled away from the members.

3. In a golf bag, strips extending transversely of the bag and sewed to the side walls thereof to divide the bag into pockets, and the bottom portion of each of said strips extending along the bottom portion of the bag and sewed to the next adjoining strip.

4. A golf bag as in claim 1, the pocket being formed between the end portions of a single length of flexible material, and a "zipper" fastener connecting said ends to close said pocket.

5. In a golf bag, a body portion, strips extending transversely of said body portion and sewed to the side walls thereof to form compartments, said bag including a mouth portion comprising a frame including transverse bars arranged in alignment with and above said strips, said strips being looped at their upper ends, and means passing through said loops below said cross bars and supported by said frame for securing the upper ends of said strips.

6. A golf bag as in claim 1 including reenforcing means for the inner wall of the pocket.

7. In a golf bag, a relatively flat body portion, transverse strips dividing said body portion into a plurality of pockets each adapted to receive two golf clubs arranged side by side, a strap disposed across the entrance end of the bag to divide each of the pockets in two, and means securing the ends of the strap to permit the strap to be pushed to one side or the other of the middle of the entrance to each of the pockets formed by the transverse strips.

8. In a golf bag, a relatively flat body portion, transverse strips dividing said body portion into a plurality of pockets each adapted to receive two golf clubs arranged side by side, a strap disposed across the entrance end of the bag to divide each of the pockets in two, means securing the ends of the strap to permit the strap to be pushed to one side or the other of the middle of the entrance to each of the pockets formed by the transverse strips and means for maintaining the strap disposed above the entrance of the bag.

9. A golf bag comprising upper and lower rigid

frame members, each of said members having a plurality of sockets therein, rods extending between said frame members and having their respective ends disposed in said sockets and maintaining said members in spaced relation, a single sheet of flexible material closing the space between said frame members and a "zipper" fastener connecting the ends of the flexible sheet.

10. A golf bag comprising a frame including upper and lower elongated frame members, the distance between the ends of each of which is at least three times the distance between its sides, rods connecting the corners of the upper member with the corners of the lower member, and each of said members having sockets receiving the respective ends of said rods.

11. A golf bag including an end frame member, a flexible body portion, one edge of said body portion being hemmed, a clamping ring encircling the frame member and clamping the hemmed edge portion of the flexible body to the frame member, and said clamping ring having a recess to receive the said hem.

12. A golf bag including an end frame member, a flexible body portion, one end of said body portion being hemmed, said frame member being externally tapered, a clamping ring member encircling the frame member, said clamping ring member having a complemental taper whereby the end portion of the flexible body is clamped between the frame member and said ring when they are assembled, and one of said members having a recess receiving the hem on the flexible body portion.

13. In a golf bag, rigid upper and lower frame members, rods extending between said frame members, a body portion enclosing the rods and the space between the frame members, partitioning means extending substantially the length of the bag and dividing the bag into a plurality of pockets each wide enough to receive two golf clubs, a flexible means disposed across the entrance end of the bag and dividing the entrance of each of the pockets in two, means extending between the sides of the upper frame member and supported thereby, and said partitioning means having its upper transverse edge portion connected directly with said last means.

14. In a golf bag, rigid upper and lower frame members, rods extending between said frame members, a body portion enclosing the rods and the space between the frame members, means extending across said upper frame member and supported thereby, and partitioning means secured at its upper transverse edge portion directly to the last means and extending substantially the length of the bag to divide the bag into a plurality of pockets each wide enough to receive two golf clubs.

15. In a golf bag, a body portion, strips extending transversely of said body portion and sewed to the side walls thereof to form compartments, said bag including a mouth portion comprising a frame including transverse bars arranged in alignment with and above said strips.

SYLVANUS D. LOCKE.
HENRY J. STEGEMAN.