PCT WORLD INTELLECTUAL PROPERTY ORGANIZATION
International Bureau

INTERNATIONAL APPLICATION PUBLISHED UNDER THE PATENT COOPERATION TREATY (PCT)

(51) International Patent Classification 5 :
B67D 1/06, 1/00, F25D 23/00
B67D 1/08

A1

(11) International Publication Number: **WO 91/17948**

(43) International Publication Date: 28 November 1991 (28.11.91)

(21) International Application Number: PCT/US91/03410

(22) International Filing Date: 21 May 1991 (21.05.91)

(30) Priority data:
527,229 22 May 1990 (22.05.90) US

(71) Applicant: THE COCA-COLA COMPANY [US/US]; P.O. Drawer 1734, Atlanta, GA 30301 (US).

(72) Inventor: CREDLE, William, S., Jr. ; 1763 East Gate Trail, Stone Mountain, GA 30087 (US).

(74) Agents: BOSTON, Thomas, R.; The Coca-Cola Company, NAT 2040, P.O. Drawer 1734, Atlanta, GA 30301 (US) et al.

(81) Designated States: AT, AT (European patent), BE (European patent), BR, CA, CH (European patent), DE (European patent), DK (European patent), ES (European patent), FI, FR (European patent), GB (European patent), GR (European patent), IT (European patent), JP, KR, LU (European patent), NL (European patent), NO, SE (European patent).

Published
With international search report.
Before the expiration of the time limit for amending the claims and to be republished in the event of the receipt of amendments.

(54) Title: CONVERTIBLE BEVERAGE DISPENSER

(57) Abstract

A low cost, multiflavor, compact, versatile, convertible beverage dispenser (10) that can be installed in any one of several different orientations so as to be able to fit in almost any available space. This dispenser can operate frontways or sideways and has a dispense module (14) that is separable from a refrigeration module (12) and that can go on top of a counter while the refrigeration module goes below. This dispenser can be used with either figals or bag-in-box and can be easily modified to dispense different numbers of beverages. When used with bag-in-box the dispenser includes built-in syrup pumps.

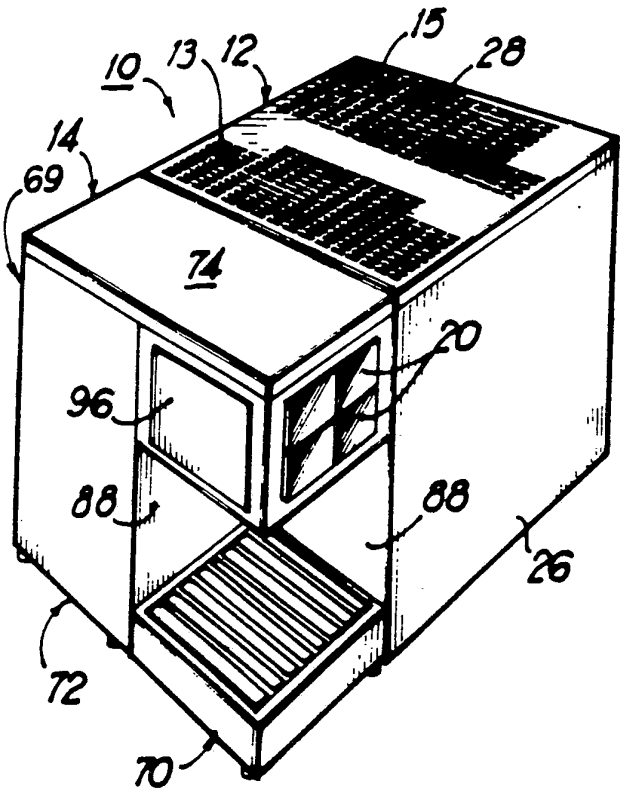

FOR THE PURPOSES OF INFORMATION ONLY

Codes used to identify States party to the PCT on the front pages of pamphlets publishing international applications under the PCT.

AT	Austria	**ES**	Spain	**MG**	Madagascar
AU	Australia	**FI**	Finland	**ML**	Mali
BB	Barbados	**FR**	France	**MN**	Mongolia
BE	Belgium	**GA**	Gabon	**MR**	Mauritania
BF	Burkina Faso	**GB**	United Kingdom	**MW**	Malawi
BG	Bulgaria	**GN**	Guinea	**NL**	Netherlands
BJ	Benin	**GR**	Greece	**NO**	Norway
BR	Brazil	**HU**	Hungary	**PL**	Poland
CA	Canada	**IT**	Italy	**RO**	Romania
CF	Central African Republic	**JP**	Japan	**SD**	Sudan
CG	Congo	**KP**	Democratic People's Republic of Korea	**SE**	Sweden
CH	Switzerland			**SN**	Senegal
CI	Côte d'Ivoire	**KR**	Republic of Korea	**SU**	Soviet Union
CM	Cameroon	**LI**	Liechtenstein	**TD**	Chad
CS	Czechoslovakia	**LK**	Sri Lanka	**TG**	Togo
DE	Germany	**LU**	Luxembourg	**US**	United States of America
DK	Denmark	**MC**	Monaco		

Convertible Beverage Dispenser

CROSS-REFERENCE TO RELATED APPLICATION

This is a continuation-in-part of copending application Serial No. 07/129,032, filed December 4, 1987, entitled Convertible Beverage Dispenser, and assigned to the same assignee.

BACKGROUND OF THE INVENTION

This invention relates to counter top, postmix beverage dispensers, and in particular to a low-cost, compact, versatile, multiflavor, convertible beverage dispenser.

A wide variety of different postmix dispensers are known, including those having multiflavor valves and those having the selector buttons and nozzle at a notched corner of the cabinet. It is also known to have a dispensing system in which some parts of the dispenser are located above the counter and some parts are located below the counter.

It is an object of the present invention to provide a unitary beverage dispenser which can be placed entirely on top of a counter and oriented either frontways or sideways or which can be easily separated into a refrigeration module placed below the counter and a small dispense module placed on top of the counter.

It is a further object of this invention to provide a compact, multiflavor, low cost, versatile, convertible postmix beverage dispenser.

It is another object of this invention to provide a beverage dispense that can be easily modified to dispense different numbers of beverages.

It is another object of this invention to provide an improved flow control module and method for easily changing the numbers of beverages to be dispensed.

It is a still further object of this invention to provide a dispenser with two fronts, which can be placed frontways or sideways, and having a small detachable dispense module which can be placed by itself on top of a counter.

It is a another object of this invention to provide a versatile dispenser that can be delivered to an outlet and that will fit in almost any available space.

It is a further object of this invention to provide a single dispenser that is no versatile that it can be used to reduce the need for an inventory of dispensers of different sizes and shapes.

It is another object of the present invention to provide a convertible dispenser having a vent arrangement that has one air-flow when the refrigeration and dispense modules are attached, and a different air flow when the modules are separated, for improved performance.

It is a further object of this invention to provide a compact dispenser having a one-piece wrap-around shell, a removable lid, a vertically oriented condenser and a modular, easily removable condenser fan-motor unit that, when slid out, provides easy access to the agitator motor and the transformer.

It is another object of this invention to provide an improved multiflavor nozzle.

It is another object of this invention to provide a dispenser with an improved water circuit, including one in which the soda or carbonated water is cooled again downstream from the carbonator, and also one in which the soda is continuously recirculated, but not through the carbonator, when the refrigeration module is remote.

It is a further object to provide a dispenser that is small and compact and yet provides a large, smooth, uninterrupted advertising area while also being less expensive to manufacture.

It is a further object to provide a dispenser with a pre-cooling syrup coil whereby the syrup pumps and carbonator can use the same pressure, thus eliminating one of two CO_2 pressure regulators.

BRIEF DESCRIPTION OF THE DRAWINGS

The present invention will be more fully understood from the detailed description below when read in connection with the accompanying drawings wherein like reference numerals refer to like elements and wherein:

Fig. 1 is a perspective view of one embodiment of the convertible dispenser of the present invention set up in its "frontways" mode of operation;

Fig. 2 is a view identical to Fig. 1 but with the dispenser set up in its "sideways" mode of operation;

Fig. 3 is a perspective view of the dispenser of Fig. 1 set up with only its narrow dispense module on top of the counter and with the refrigeration module beneath the counter;

Fig. 4 is an exploded, partly broken-away, perspective view of the dispenser of Fig. 1;

Fig. 5 is a partly cross-sectional side view of the convertible dispenser of Fig. 1;

Fig. 6 is a partly cross-sectional, partial side view of the dispenser of Fig. 1;

Fig. 7 is a partly broken away perspective view of the dispense module showing how it is converted to the Fig. 3 mode of operation;

Fig. 8 is a cross-sectional view through the flow control module of this invention;

Fig. 9 is a diagrammatic view showing the water connection when the dispense module connected to the refrigeration module;

Fig. 10 is a diagrammatic view showing the water connection when the dispense module is separated from the refrigeration module;

Fig. 11 is a perspective view similar to Fig. 3 but of another embodiment that requires much less space;

Fig. 12 is a front view of the dispense module according to a still further embodiment of this invention;

Fig. 13 is a perspective view of the preferred embodiment of the convertible dispenser of the present invention;

Fig. 14 is a perspective view of the refrigeration module of the convertible dispenser of Fig. 13;

Fig. 15 is a partly cross-sectional side view of the dispenser of Fig. 13;

Fig. 15A is a partially exploded, cross-sectional side view like Fig. 15 but showing the modular condenser-fan and motor unit removed;

Fig. 16 is a partly diagrammatic, partly schematic flow diagram showing the water and syrup circuits in the dispenser of Fig. 13 when the dispense and refrigeration modules are connected;

Fig. 17 is a partly diagrammatic, partly schematic flow diagram showing the water and syrup circuits in the dispenser of Fig. 13 when the two modules are separated;

Fig. 18 is a partly cut-away bottom perspective view of the nozzle and spout;

Fig. 19 is a bottom plan view of the nozzle;

Fig. 20 is a cross-sectional side view of the nozzle taken along line 20-20 of Fig. 19;

Fig. 21 is a cross-sectional side view of the nozzle taken along line 21-21 of Fig. 19;

Fig. 22 is a partly cross-sectional side view of the dispense module of the dispenser of Fig. 13 and also showing one end of the python;

Fig. 23 is an enlarged, partial, exploded view showing certain details of the connectors;

Fig. 24 is a partial, partially exploded top plan view of the refrigeration module 212 showing the connection to the other end of the python; and

Fig. 25 is an exploded perspective view of the dispenser housings for the dispenser of Fig. 13 showing the connecting means therefor.

SUMMARY OF THE INVENTION

A low cost, compact, versatile, multiflavor, postmix, convertible beverage dispenser which can be oriented in any one of several different ways to fit into any available space in an outlet. If an outlet has room for a dispenser, this dispenser will fit. This advantage can be used to reduce the inventory of

different sizes of dispensers presently needed to accommodate different outlets.

This dispenser can be oriented frontways or sideways by an easy change in the location of the selector buttons. Alternatively, this unitary dispenser can be separated into a dispense module and a refrigeration module. The refrigeration module can be located below the counter and the dispense module can fit into a very small place on a counter.

This convertible dispenser can be used with figals or can be used with bag-in-box with built-in syrup pumps. In addition, this convertible dispenser can be easily modified to dispense different numbers of beverages.

DETAILED DESCRIPTION OF THE PREFERRED EMBODIMENTS

With reference now to the drawings, Figs. 1-10 show one embodiment of the convertible beverage dispenser 10 of the present invention.

The dispenser 10 includes a refrigeration module 12 and a separate dispense module 14 which is removably attached to the refrigeration module. In the preferred embodiment shown, the dispenser 10 has a single multiflavor valve 16 with a single mixing and dispensing nozzle 18 for dispensing a beverage into a cup 19 (Fig. 7), carbonated water line 22 and four syrup lines 24. The dispensing valve 16 is in a notched corner of the dispenser 10 with the buttons on either of the adjacent walls.

The dispenser 10 as shown in the drawings is set up for use with bag-in-box syrup containers (not shown), although it can also be used with figals (not shown).

The dispenser 10 can be set up for operation on a countertop 11 (see Fig. 3) in any one of the three modes of operation shown in Figs. 1, 2 or 3. To convert between the modes shown in Figs. 1 and 2, it is only necessary to move the buttons 20 to change places with the panel 96. to convert from either the Fig. 1 or 2 mode to the Fig. 3 mode, a small conversion kit is used. The dispense module 14 is separated from the refrigeration module 12 and slightly rearranged (Fig. 7), the longer water and syrup lines are attached, a different splash

plate (flat instead of L-shaped) is attached, and preferably a recirculating pump 134 and line are connected.

The refrigeration module 12 includes a housing 26, a lid 28, an ice-water tank 30, a refrigeration unit 32, a carbonator unit 34, and four syrup pumps 36 mounted on the sidewall 38. The lid 28 has air inlet vents 13 in a front portion thereof and air outlet vents 15 in a rear portion thereof.

The refrigeration unit 32 is mounted on a refrigeration deck 40 that sits on top of the tank 30. The unit 32 includes the usual equipment such as an evaporator coil 42, an agitator 44, condenser coils 46m compressor 48, ice bank control 50, and cooling fan 52 operated by an agitator motor 54,

The carbonator unit 34 is mounted on a carbonator deck 56 and includes the usual carbonator equipment including a carbonator tank 58, a water pump and motor 60, level controller 62, and CO_2 inlet 64.

The refrigeration module 12 also includes the usual water cooling coils 66 and four separate syrup cooling coils 68. The water goes to the pump 60, then to the water cooling soils 66, then to the carbonator tank 58 and then to the multiflavor valve 16. The syrup goes from a bag-in-box container (not shown) to one of the four syrup pumps 36, to a syrup cooling coil 68, and then to the multiflavor valve 16. Each pump 36 has a CO_2 inlet, a syrup inlet and a syrup outlet, for example, for a CO_2 operated pump.

The dispense module 14 has a longer sidewall and shorter frontwall and includes a dispense module housing 69, a dispense section 70, a separate hollow section 72, and a lid 74. The hollow section 72 is generally U-shaped with an opening 76 in its rear wall 78 to accommodate the syrup pumps 36, in the modes of operation shown in Figs. 1 and 2. The hollow section 72 is attached by bolts and nuts 80 to the refrigeration module housing 26.

The dispense section 70 includes separate upper and lower portions 82 and 84, respectively, and an L-shaped splash guard 88 in Figs. 1 and 2, and a flat splash guard 90 in Fig. 3. The lower portion is the drip tray unit and includes the drip tray 85

and the cup rest 86. The drip tray unit can be connected to the hollow section 72 and/or to the refrigeration module 12.

The upper portion 82 includes a shell 92 having an open top 93 and an open rear wall 94. The shell 92 is bolted to both the refrigeration module housing 26 and to the hollow section 72 by bolts and nuts 80.

The upper portion 82 includes the selector buttons 20, a panel 96, and the single multiflavor valve 16. In the arrangement of Fig. 1 when the dispenser 10 is arranged frontways, the selector buttons 20 are placed in an opening 100 in a frontwall 98 of the dispense module 14, and the panel 96 is placed in an opening 102 in the sidewall 104. In the mode of operation shown in Fig. 2, the selector buttons 20 are placed in the sidewall opening 102 and the panel 996 is placed in the frontwall opening 100. In the separated arrangement of Fig. 3, the selector buttons 20 are placed in the sidewall opening 102 as in Fig. 2.

The manner of changing the selector buttons 20 and panel 96 will now be described. the openings 100 and 102 are identical in size and the buttons and panel can be handled through the open top 93 (with the lid 74 off). Each of the panel and buttons use connected to an identical mounting plate 106, so a description of one will suffice. The plate 106 has a flange 108 along its bottom edge that fits in a groove, and the plate has a single slot 105 centrally located in its top edge to receive a bolt 107 connected to the wall and on which a wing nut 109 is attached. The wires from the solenoids of the flow control modules 110 to the buttons 20 are flexible and easily allow movement of the buttons from one wall to the other.

The multiflavor valve 16 will now be described. The valve 16 includes the single nozzle 18 and a plurality of separate, identical flow control modules 110, shown in Fig. 10. One of the flow control modules 110 is for carbonated water an there are four separate syrup modules 110, one for each of four syrups. A water line 112 extends from the water flow control module 110 to a central opening in the nozzle 18, while the four syrup lines 111, 112, 113, and 114 extend from a respective one

of the flow control modules 110 to a respective one of the circumferentially arranged openings 116 in the top of the nozzle 18.

Referring to Fig. 8, each of the flow control modules 110 includes a body 120 and a liquid passageway 122 therethrough from an inlet port 124 to an outlet port 126. A standard piston-spring flow control 128 is located in the passage. A solenoid controlled valve 130 (including a solenoid, an armature, and a valve element movable onto and off of a valve seat) controls the on-off flow through the module 110. An advantage of this module is the fact that the inlet and outlet ports are on opposite faces and have passageways whose axes are parallel, to provide ease of installation.

The operation of the two arrangements shown in Figs. 1 and 2 will thus be clear from the above description. If only a very small countertop space is available, then the dispenser 10 can be converted to a two-piece unit shown in Fig. 3 with only the very narrow dispense module placed on top of the countertop 11.

This conversion from a one to two-piece unit can be easily done in the field with the aid of a small break-away conversion kit containing the long water and syrup lines 132, a recirculating water pump 134 to be mounted on the refrigerator module housing 26, and a flat splash plate 90. To do the conversion, the lids are removed, the bolts and nuts 80 are removed, the recirculating water pump 134 is mounted on the housing 26, and the lines 132 are installed. In addition, the two sections 70 and 72 of the dispense unit are disconnected and then re-connected, using bolts and nuts 80 as shown in Fig. 10. In this way, the openings in their rear walls are facing each other and the dispense module has a smooth, clean, exterior surface. The drip tray is not connected to the shell 92, but its is connected to a drip tray support that is connected to the hollow section 72 and that extends under both sections 70 and 72 of the dispense module as shown in Figs. 1 and 2. This support is disconnected from the hollow section 70 and then reconnected to extend under the drip tray in Fig. 3.

Fig. 9 shows the standard set up for the water line for the Figs. 1 and 2 modes of operation, and Fig. 10 shows the additional recirculating water line set up for the Fig. 3 mode of operation. This provides cold water for the dispenser at all times.

Fig. 11 shows a dispense module 140 according to another embodiment similar to Fig. 3 except that the hollow section 72 is replaced (along with a different lid and drip tray support) with a different hollow section 142 having much less depth than does section 72. This embodiment would be used where only a very small countertop space is available.

Fig. 12 shows another embodiment of this invention wherein the upper portion 82 of the dispense section 70 of the dispense module 14 is used by itself, by connecting it above a sink, such as under an existing cabinet (it can alternatively be wall mounted).

Figs. 13-25 show a preferred embodiment of a convertible dispenser 210 of the present invention. The dispenser 210 is similar to the dispenser 10 described above with the following differences described below with reference to Figs. 13-25.

Figs. 13 and 14 show the air vent arrangement of the dispenser 210. The dispenser 210 includes a lid 228 having air inlet vents 229 and air outlet vents 230 in a front portion and in a rear portion, respectively, of the lid 228. The refrigeration module 212 includes air inlet vents 233 in the upper portion of the sidewall 238.

When the refrigeration module 212 is attached to the dispense module 214, air flows into the refrigeration module 212 through the air inlet vents 229, through the condenser 246, and out through the air outlet vents 230. When the modules 212 and 214 are separated, however, the refrigeration module 212 may often be located in a confined space and the air flow could go directly from the air outlet vents 230 into the inlet vents 229. This would cause the compressor motor to run more often, wear out more quickly and could raise the drink temperature. Therefore, in this situation, the inlet vents 229 are covered by a plate 235 (of metal, wood or plastic, for example) and the air then flows

in the air inlet vents 233 and out the air outlet vents 230. It has been found that this arrangement with the plate 235 avoids the problem mentioned above.

Figs. 15 and 15A show the preferred arrangement of the refrigeration module 212 including a condenser 246 (or condenser coil), a cooling fan 252, a cooling fan motor 253, and a separate agitator motor 255. The fan and fan motor are mounted together as an integral, easily removable modular unit 257, including a bracket 259 which is held in place by two screws 261. This arrangement permits the use of a larger condenser than in the dispenser 10.

By simply removing the two screws 261, the entire unit 257 can be easily slid out directly upwardly out of the dispenser 210 (after removing the lid 228). This also provides easy access to the agitator motor 255 and other components including a transformer mounted adjacent the motor 255. This feature is important because the dispenser 210 does not have a separate bonnet (or top half of the housing) as do many countertop dispensers, so access has to be through the top opening when the lid is removed. Thus, although the dispenser 210 is small and compact, the internal components are easily accessible while the outside shell has a smooth, clean, and continuous surface providing a large advertising surface and a neat appearance.

Figs. 16 and 17 show the water and syrup circuits for the dispenser 210, both when the two modules are connected and when they are separated. Figs. 16 and 17 both show a cooling coil 271 in the soda line 273 downstream from the carbonator tank 258. The dispenser 210 also has the precooling coil 66 as shown in Figs. 9 and 10. This precooling coil 66 allows the use of a lower CO_2 pressure in the carbonator tank 258 and in fact the use of the same pressure in the tank 258 that is needed to operate the syrup pumps 36. This allows for the elimination of a separate CO_2 pressure regulator for the carbonator tank 258 and allows for the operation of the dispenser 210 with only the single CO_2 regulator 275 on the CO_2 cylinder 276.

Fig. 17 shows a recirculating soda line 277, a pump 279 and a motor 281 for driving the pump, for use when the modules are

separated. It is noted that this recirculating line is entirely downstream from the carbonator tank 258. This pumping can be controlled to turn on and off as desired but is preferably left on continuously. This recirculating soda line provides a cold drink at all times, even through the refrigeration module is located some distance away from the dispense module.

In Fig. 17, all of the syrup and soda and plain water lines between the separated modules are preferably contained in an insulated python, normally about ten (10) feet long.

Fig. 17 also shows a multiflavor nozzle 300, solenoid valves 285, flow controls 287, flow washers 289, a chilled water bath 291, the carbonator tank 258, the CO_2 cylinder 276, the pressure regulator 275, the syrup pumps 36, the carbonator pump 293, and the plain water line 295. Fig. 16 shows the same components except for the recirculating soda system which is not used when the dispense and refrigeration modules are connected.

Figs. 18-21 show the preferred nozzle 300 of the present invention used in the dispenser 210, including a nozzle body 302 and a spout 304. The nozzle body has a water passageway 306 therethrough and four separate syrup passages, one of which 308 is show in Fig. 20. The water goes straight down from a water inlet port 309 through an axial passage 310 in the nozzle body until it splits into two radial passages 312 and 314 at right angles to the axial passage 310. The passages 312 and 314 exit into an annular groove 316 from which the water hits the spout 304 and then flows down and out the spout opening 318. The four syrup passages are similar to each other and each start at a respective one of four separate syrup inlet ports 330, 331, 332 and 333 and continue through the nozzle body as described below for passage 308. The syrup passage 308 splits into two separate passages 320 and 322 and exit out two separated, spaced-apart, outlet openings 324 and 326 in a bottom wall 328 of the nozzle body 302. This nozzle provides improved mixing, less stratification in the beverage cup, and reduced flavor carryover. Any known method can be used to connect the spout to the nozzle such as a bayonet connection using two flanges on the spout.

The hollow section 372 of the dispense module 214, referred to as the pump wrap because it covers the syrup pumps 36, can be easily removed to provide access to the syrup pumps by simply removing two screws 373 at the top thereof, and then lifting up to clear two pins from two holes at the lower end of the section 372. The same pin-hole arrangement is used to connect the drip tray unit 375 to the section 372 when the modules are separated. The pin-hole arrangement is shown in Fig. 25. The hollow section 372 has two holes 500 and 502 and the refrigeration module has two mating pins 504 and 506. The drip tray has two pins 508 and 510 and the refrigeration module has two mating holes 512 and 514. When the two modules are separated, the pins of the drip tray connect with the holes 500 and 502 in the hollow section 372.

The dispenser 210 does not use the separate drip tray support of the dispenser 10 of Fig. 1. When the two modules are connected, there is preferably no connection between the two sections of the dispense module.

The refrigeration module includes a recess 400 (see Fig. 15A) thereunder and a notch 402 in the sidewall 404 thereof to accommodate the CO_2 line, the water line and the syrup lines. All of these lines come up through the recess and then under the drip tray and into the hollow section.

The drip tray unit 410 includes the drip tray 412 and the cup rest 414.

The dispenser 210 can include legs, or not, as desired. If the refrigeration unit includes legs, then legs are also used on the dispense unit but preferably on the distal end thereof.

Referring now to Figs. 22-24, these show certain connection details and the python 300. When the dispense and refrigeration modules are separated, as described above for both the embodiments of Fig. 1 and Fig. 13, the long syrup and water lines 302 are preferably encased in a long insulated tube or python 300. Fig. 24 shows the end of the python connected to the refrigeration module 212 and Figs. 22 and 23 show the end connected to the dispense module 214. As shown in Fig. 22, the python preferably extends through a hole 303 in the counter 304

on which the dispenser sits. Fig. 22 shows the fitting 306 for the recirculating soda line 277.

As shown in Fig. 23 a conduit 308 that goes into the multiflavor valve has a fitting 310 with an o-ring 312 and a groove 314. The end of a flexible line 316 includes a mating coupling 318 that slides over the fitting 310. A pin 320 slides through two holes 322 in the coupling 318 and into the groove 314 to hold the line to the conduit 308. The valve 110 is held to the wall 326 by sliding the conduit 308 down in the Keyway 328 to lock the wall 326 between the fitting 310 and the rear of the valve 110. For simplicity, the valve 110 is not shown in Fig. 23. The connections to the refrigeration module at the other end of the python are made the same way, as shown in Fig. 24.

Fig. 24 also shows the return line and the pump 279 of the recirculating soda circuit. The pump 279 is mounted on the lower outside surface of the refrigeration module. The python extends up through the hollow section 72 of the dispense module 214. The electrical lines are in the cable 330.

While the preferred embodiment of this invention has been described above in detail, it is to be understood that variations and modifications can be made therein without departing from the spirit and scope of the present invention. For example, while the preferred embodiment described above uses a multiflavor valve, this is not essential; it can alternatively use separate dispensing valves for each beverage or any combination of multiflavor and separate valves. In addition, while the preferred embodiment has been described for use with bag-in-box, it can also be used with figals, in which case the syrup pumps would not be included. The dispenser has been described for use with four separate syrups; this number can easily be changed by changing the number of flow control modules and syrup cooling coils. Other types and arrangements of the selector buttons can also be used. Instead of moving the buttons in switching between the Figs. 1 and 2 arrangements, buttons can be located permanently in both places, with a cover over the ones not being used. As used herein, the term "convertible" means a dispenser

that can be converted in size and shape to fit in different available spaces. In addition, when converting to the Fig. 3 mode, or preferably to the Fig. 11 mode, the hollow section 142 can be part of the dispense section with a hollow section like 72 left connected to the refrigeration module. Also, the long lines can be stored in the hollow section 72. this would make the conversion easier and could avoid the need for a conversion kit. The dispense module can be made as a one-piece unit, and when separated from the refrigeration module, an additional, separate panel could be added to the open side that faces the refrigeration module when connected thereto. The refrigeration system is preferably mechanical although a cold plate could be used.

What is claimed is:

1. A convertible multiflavor postmix beverage dispenser comprising:

(a) a refrigeration module and a separate dispense module, said refrigeration module having a refrigeration module housing and said dispense module having a dispense module housing;

(b) removable connecting means for connecting said housings together to operate as a one-piece unit and for separating said housings from each other to operate as a two-piece unit;

(c) means for connecting a water line in said refrigeration module to a water line in said dispense module;

(d) means for connecting a plurality of syrup lines in said refrigeration module to a plurality of syrup lines in said dispense module;

(e) said refrigeration module including a refrigeration unit and a carbonation unit inside of said refrigeration module housing;

(f) said dispense module including a plurality of selector buttons and a multiflavor dispensing valve with a dispensing nozzle for dispensing a beverage into a cup;

(g) said refrigeration module being larger than said dispense module and said refrigeration module housing having a width equal to the length of said dispense module housing and when said housings are connected together, one end of said refrigeration module housing being connected to one side of said dispense module housing;

(h) means on said one end of said refrigeration module housing for mounting a plurality of syrup pumps to the external surface thereof;

(i) said one side of said dispense module housing having a syrup pump opening therein and said dispense module housing including a hollow section adjacent said opening of a size sufficient to receive therein any syrup pumps mounted on said refrigeration module; and

(j) wherein said refriegeration housing includes a lid having front portion and a rear portion, an air vent in each of

said endwall, and front and rear portions, and means for coverging said front portion air vent when said housings are separated, whereby when said housings are connected air can flow in said front portion air vent and out said rear portion air vent, and when said housings are separated air can flow in said endwall air vent and out said rear portion air vent.

2. The apparatus as recited in claim 1 wherein said refrigeration module includes a removable lid, an agitator motor and a separate condenser fan motor, wherein said condenser is oriented vertically, wherein said condenser fan and motor are a unitary modular unit easily removable straight up out of said refrigeration module when said lid has been removed, wherein said agitator motor is located below said fan motor and is easily accessible and removable when said fan and motor have been removed.

3. The apparatus as recited in claim 1 wherein said nozzle includes at least two syrup passageways therethrough for each syrup flavor and at least two, separate, spaced-apart, syrup outlet openings for each syrup flavor, to improve mixing.

4. The apparatus as recited in claim 1 wherein said water line includes a first portion extending into said carbonation unit and a second portion extending from said carbonation unit to said multiflavor valve, means for cooling said second portion, and means for recirculating the water solely in said second portion and not in said carbonation unit to cool it in said cooling means.

5. The apparatus as recited in claim 4 including pre-cooling means for cooling the water in said first portion of said water line.

6. The apparatus as recited in claim 4 wherein recirculating means is a pump.

7. The apparatus as recited in claim 6 including means for operating said recirculating pump continuously when said housings are separated.

8. The apparatus as recited in claim 1 including a CO_2 source, a CO_2 line connected from said source to said carbonation unit and to said syrup pumps, wherein said refrigeration unit includes

a plurality of syrup pumps, and a single pressure regulator controlling the same pressure to both said pumps and said carbonation unit.

FIG 1

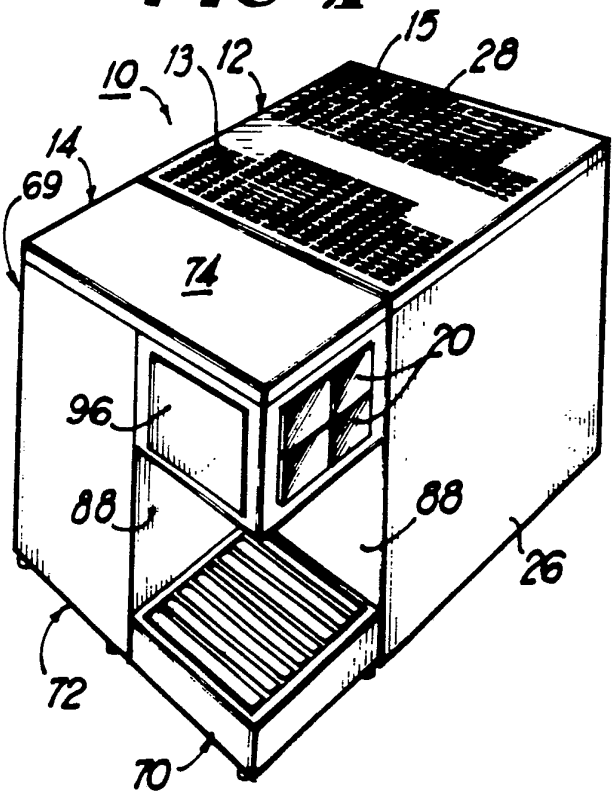

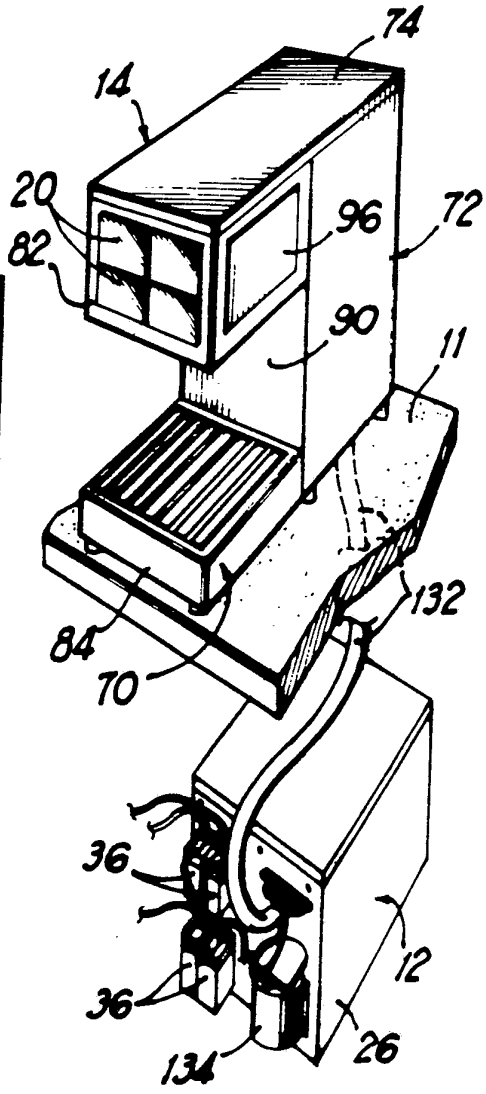

FIG 3

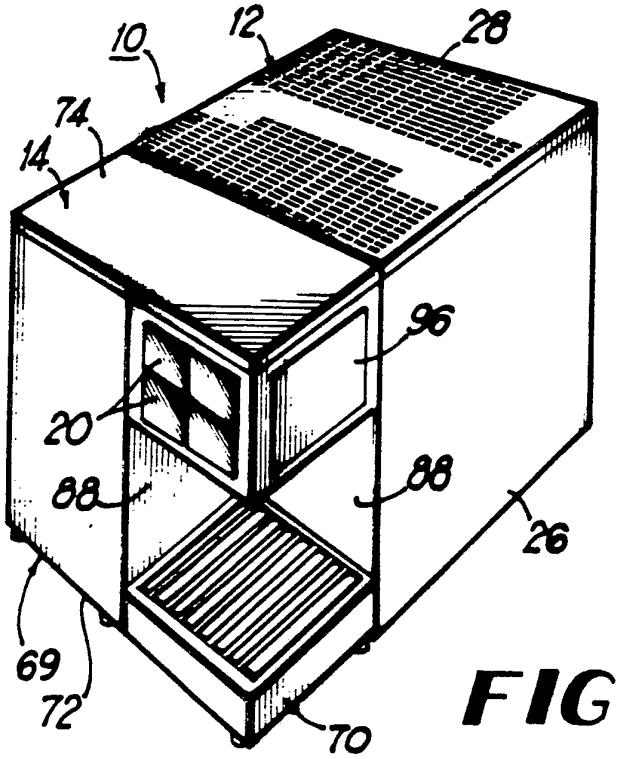

FIG 2

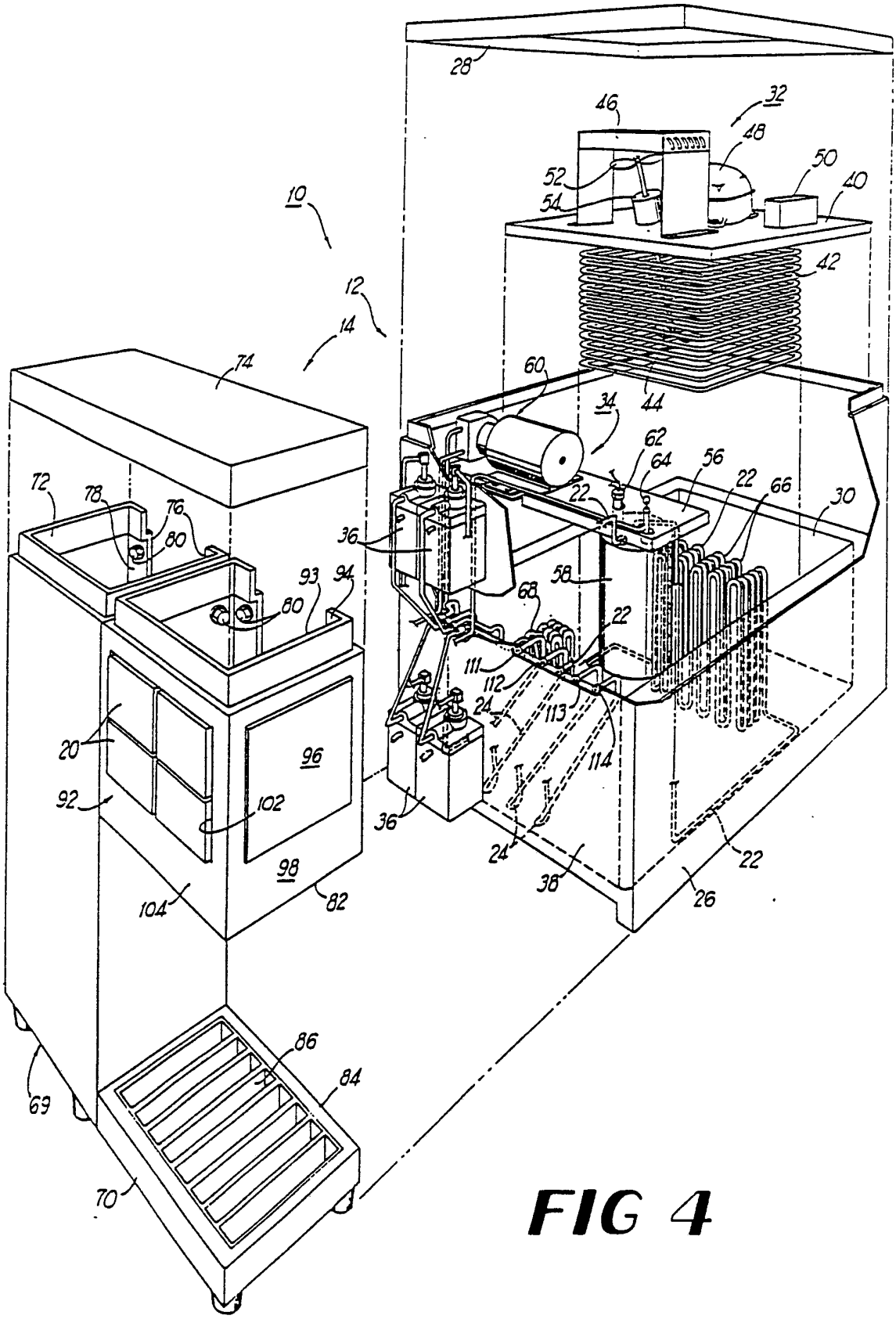
28
46
32
48
50
40
52
54
10
42
12
14
74
60
44
34
62
64
56
22
66
30
72
78
76
80
36
58
93
94
68
22
111
112
113
24
114
20
96
92
102
36
24
38
22
26
98
104
82
86
84
69
70

FIG 4

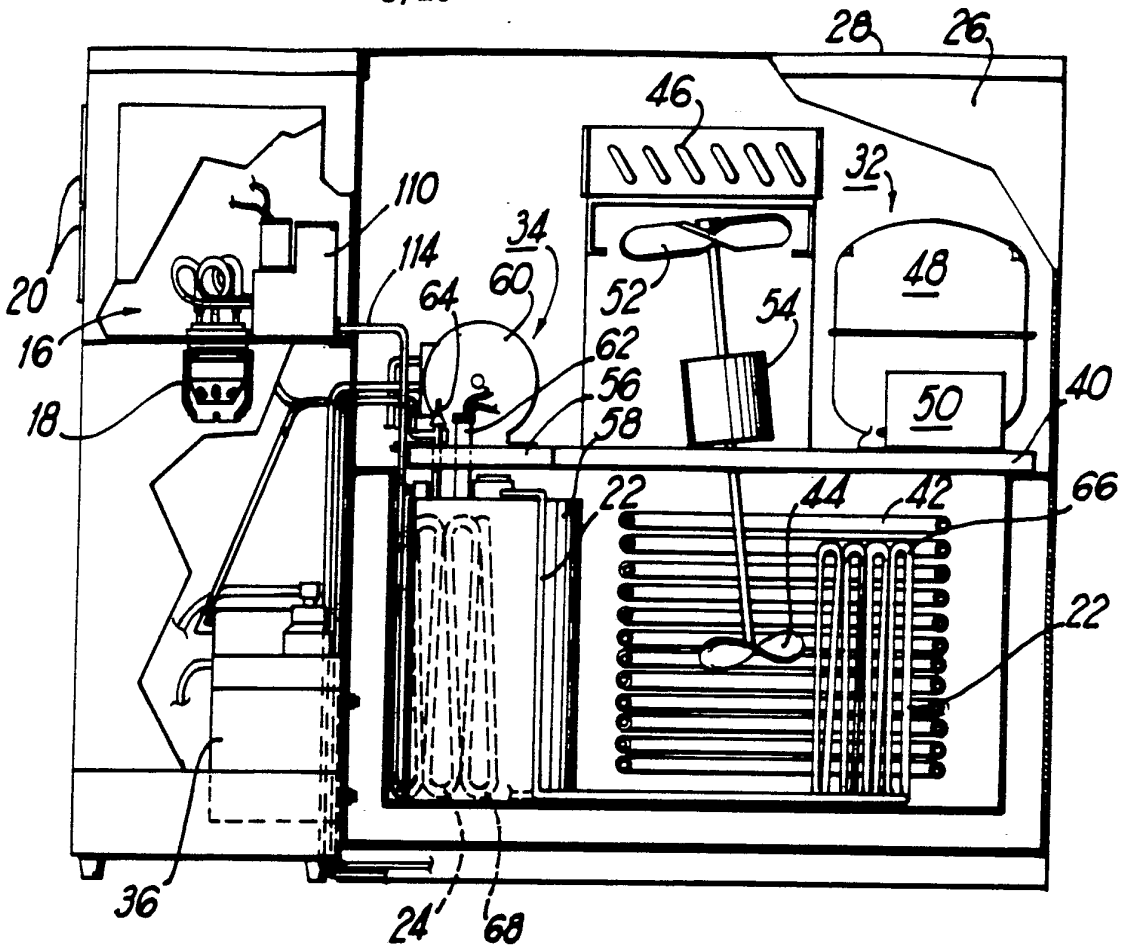
28
26
46
32
110
34
114
60
64
52
54
48
20
16
62
56
58
50
40
18
22
44
42
66
22
36
24
68

FIG 5

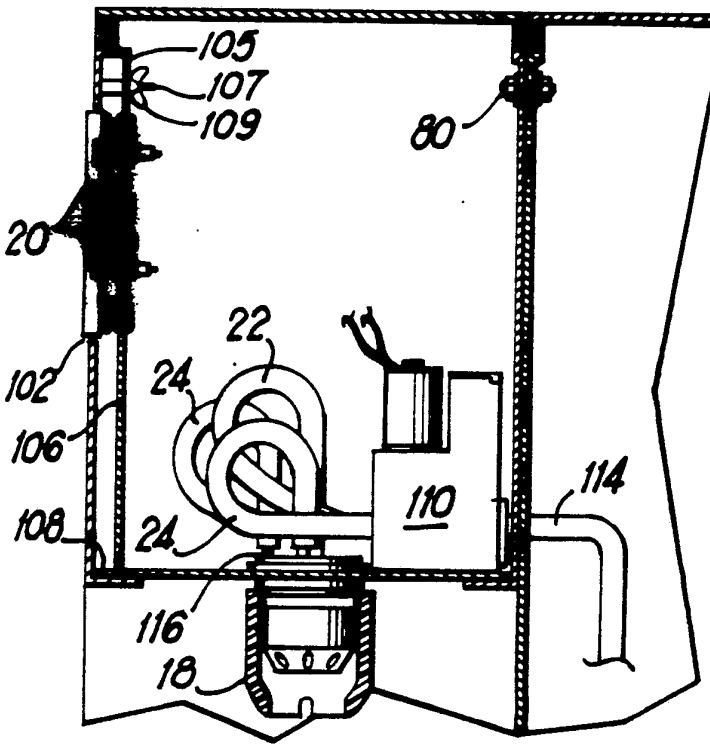
105
107
109
80
20
22
24
102
106
110
114
108
24
116
18

FIG 6

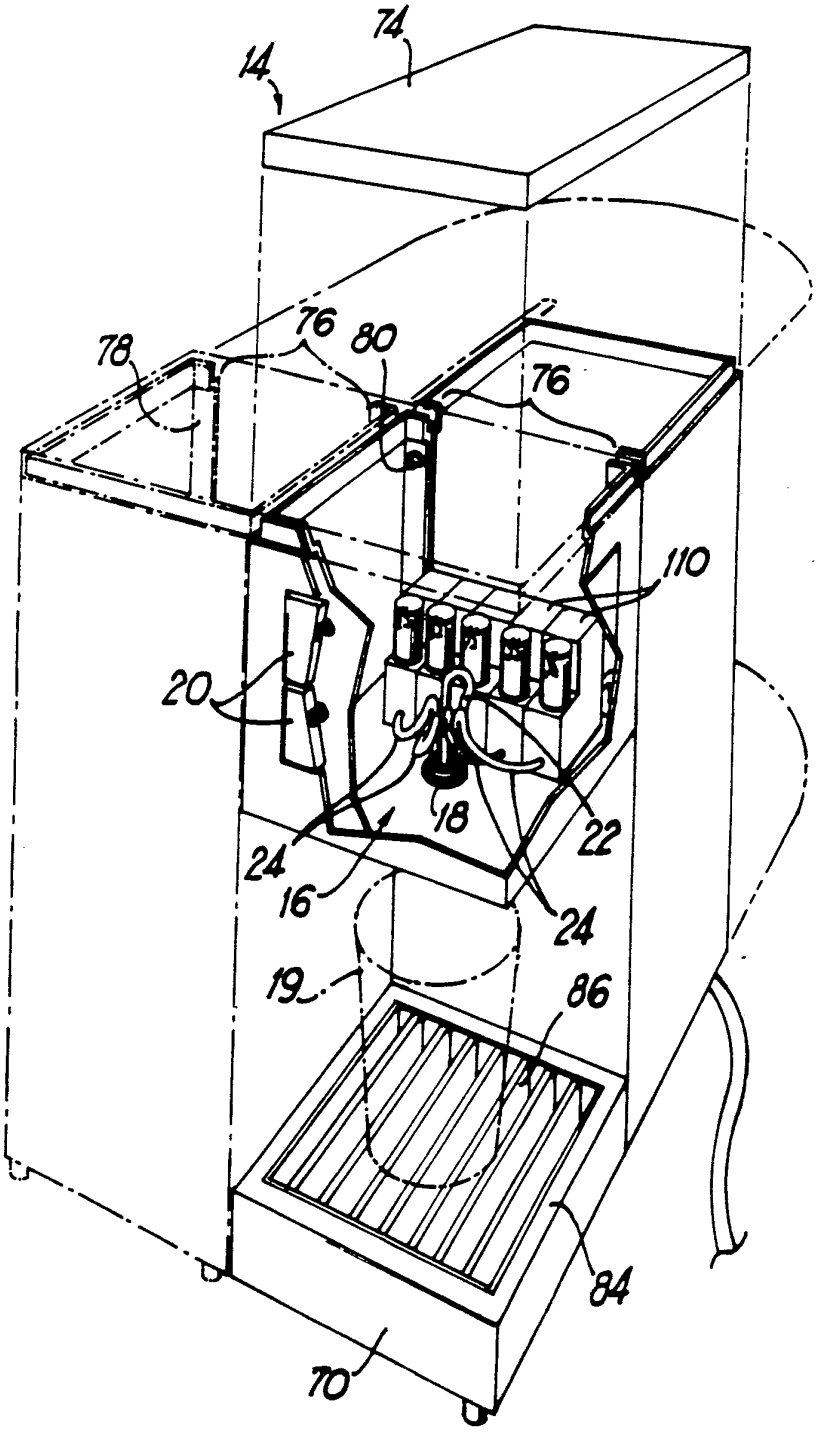

FIG 7

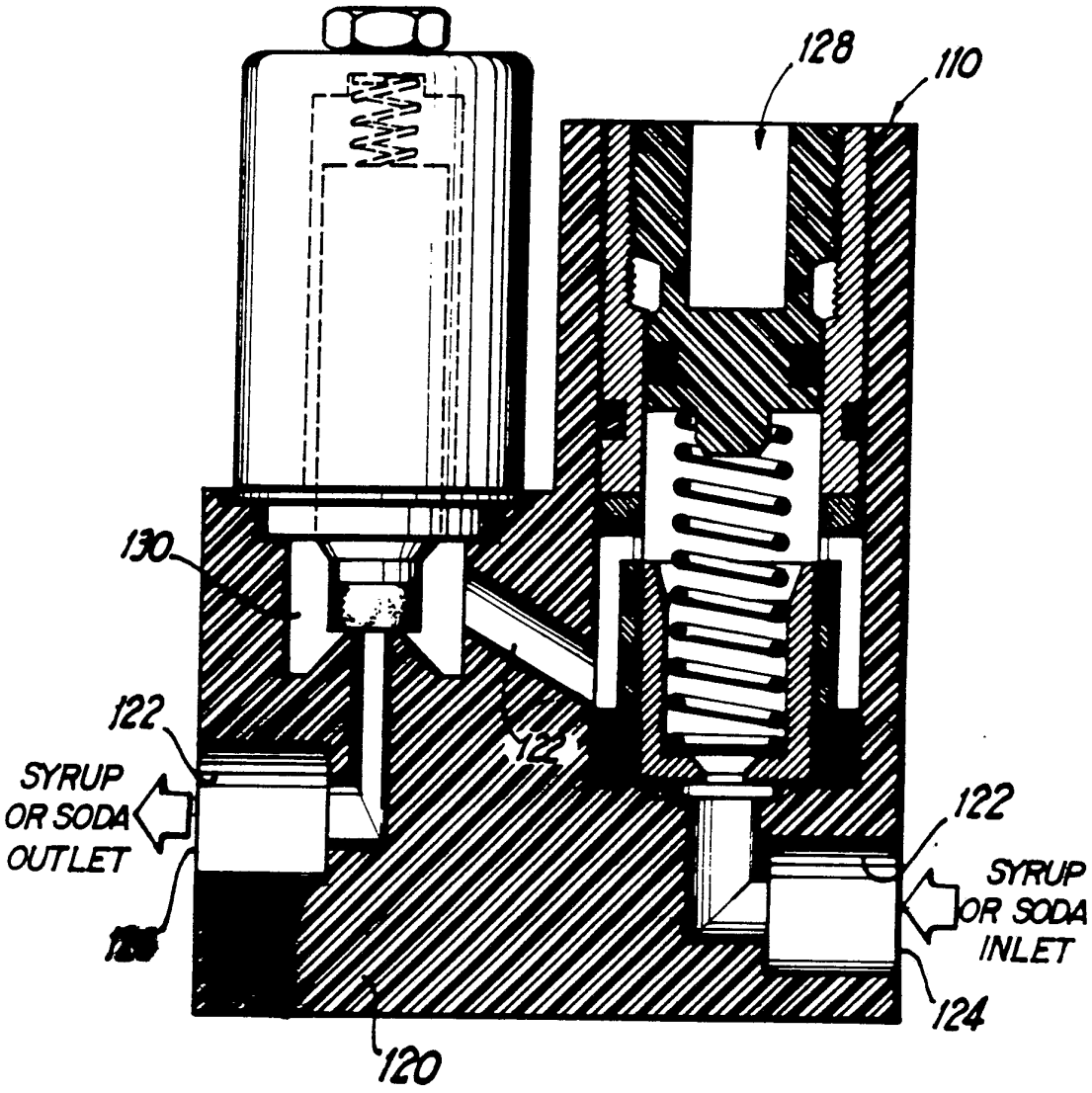
128
110
130
122
SYRUP
OR SODA
OUTLET
122
SYRUP
OR SODA
INLET
124
120

FIG 8

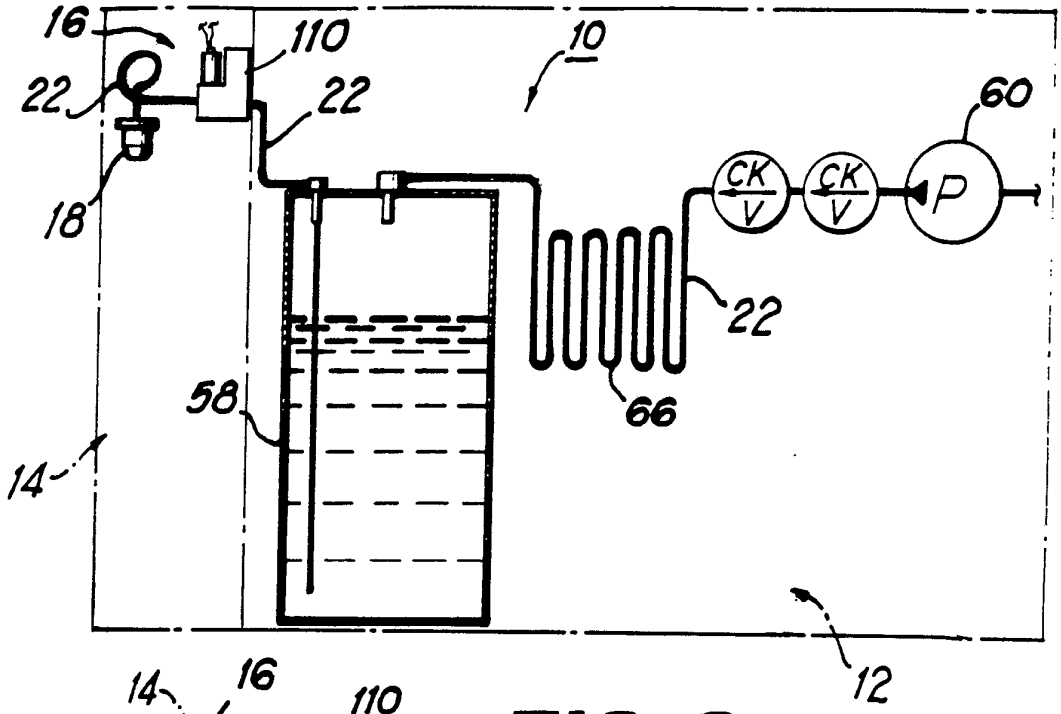
16
110
10
22
22
60
CK
V
CK
V
P
18
22
58
66
14
12

FIG 9

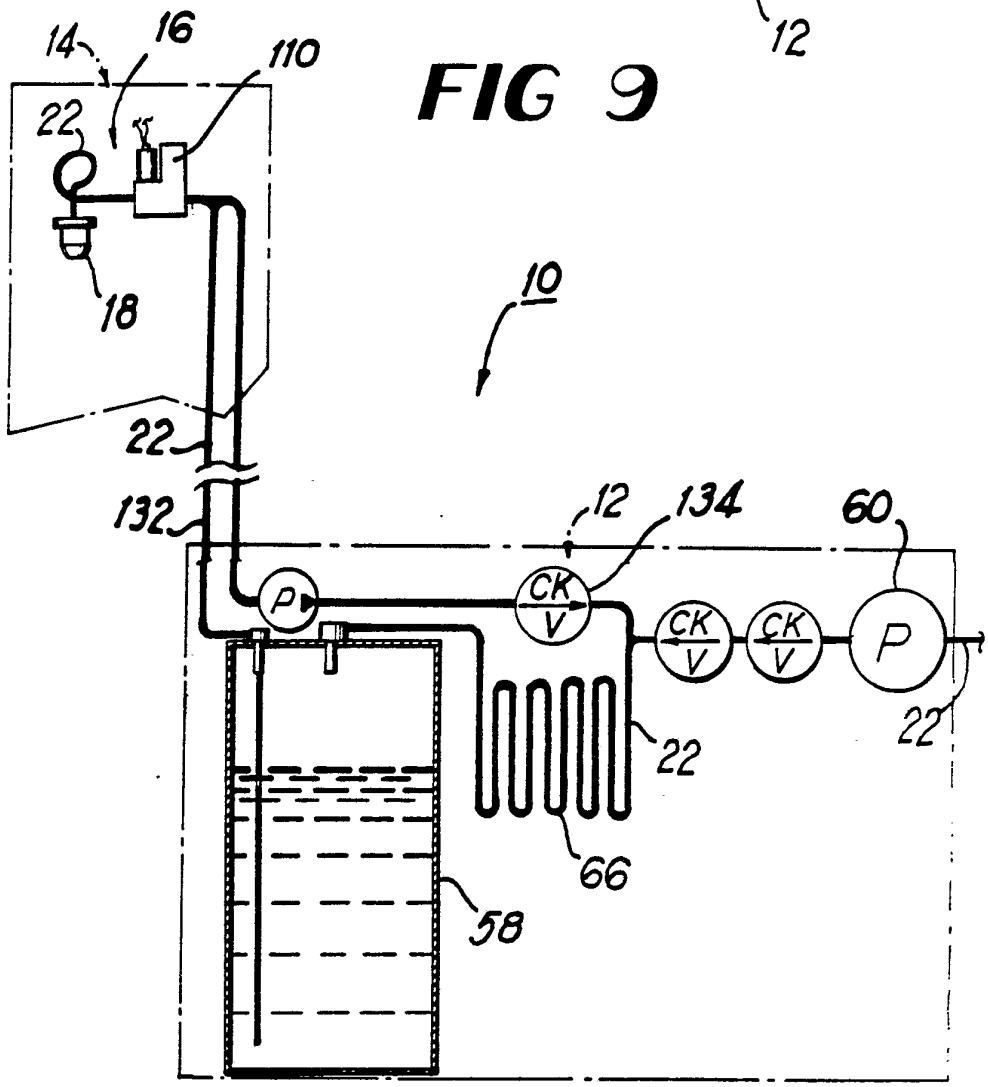
14
16
110
22
18
10
22
132
12
134
60
P
CK
V
CK
V
CK
V
P
22
22
66
58

FIG 10

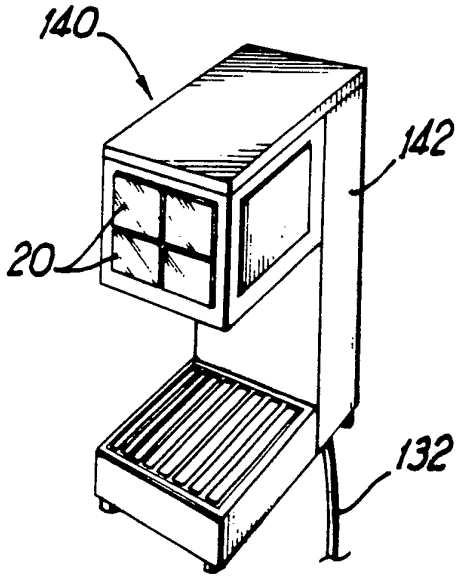

FIG 11

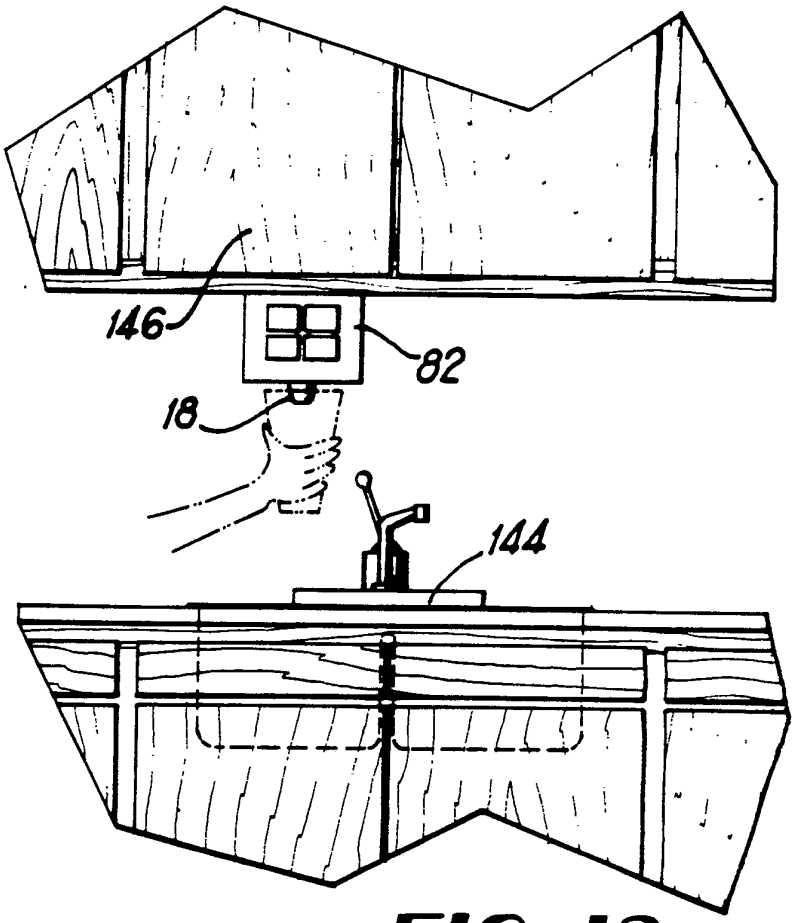

FIG 12

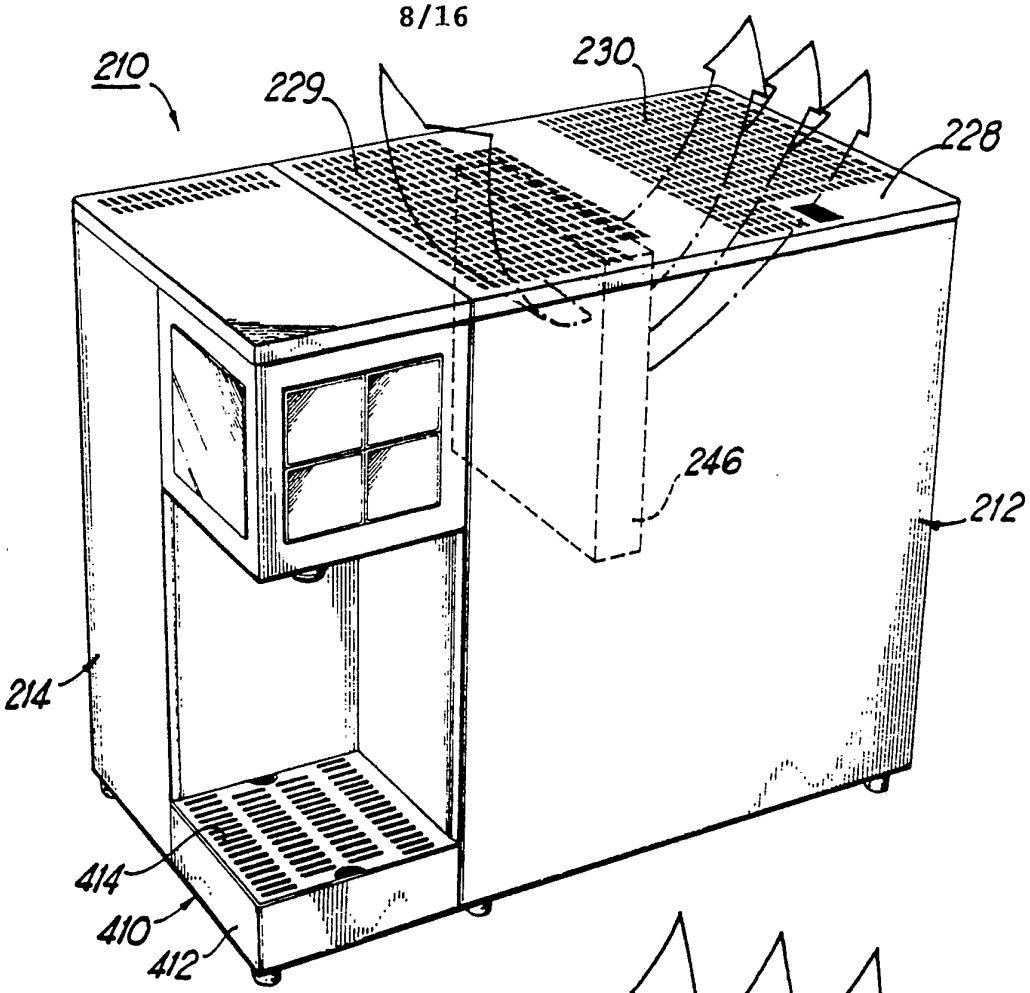
210
229
230
228
246
212
214
414
410
412

FIG 13

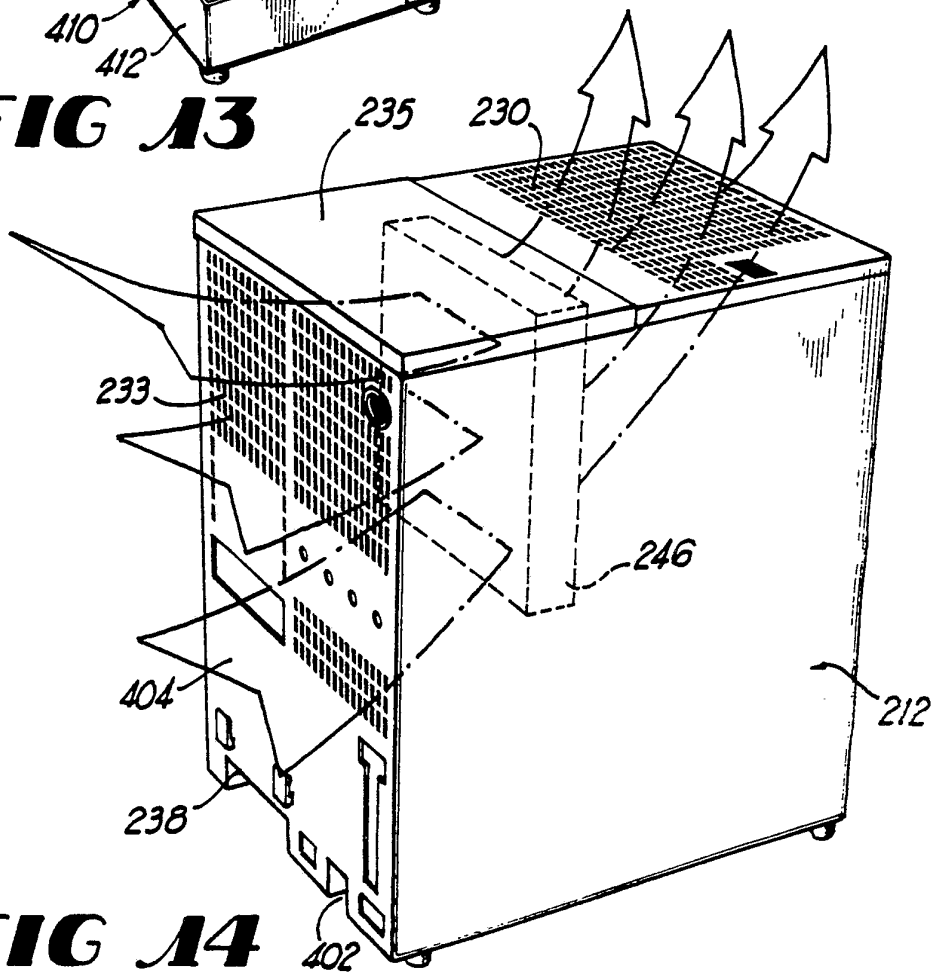
235
230
233
246
404
212
238
402

FIG 14

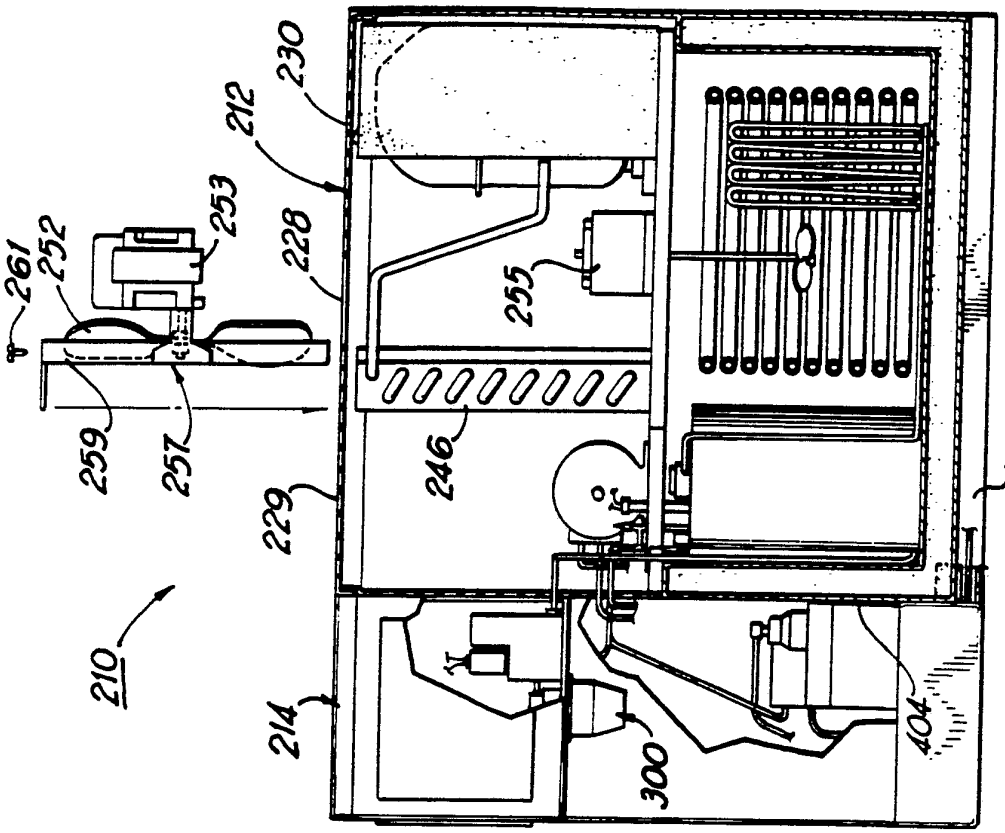

FIG 15A

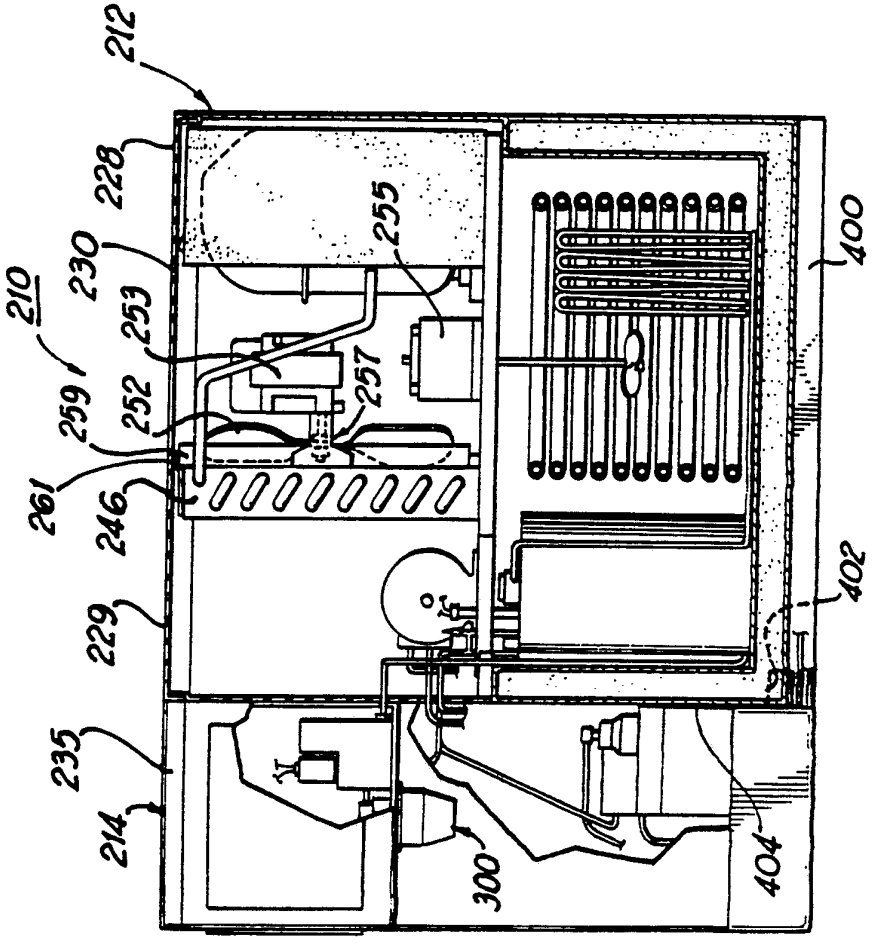

FIG 15

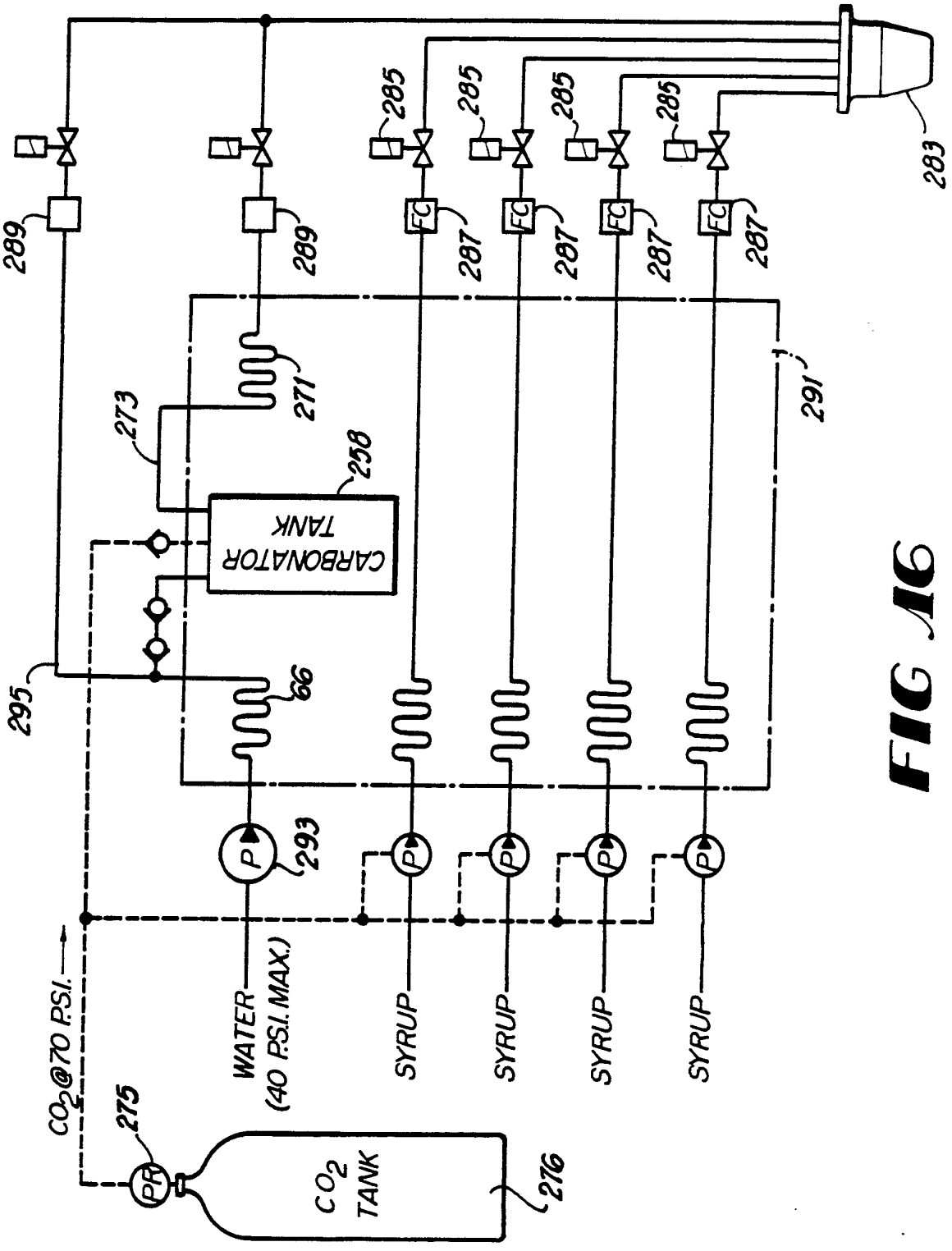
CARBONATOR TANK
258
273
271
291
295
66
293
289
289
285
285
285
285
287
287
287
287
283
FC
FC
FC
FC
P
P
P
P
P
WATER (40 P.S.I. MAX.)
SYRUP
SYRUP
SYRUP
SYRUP
CO_2@70 P.S.I.
275
PR
CO_2 TANK
276

FIG 16

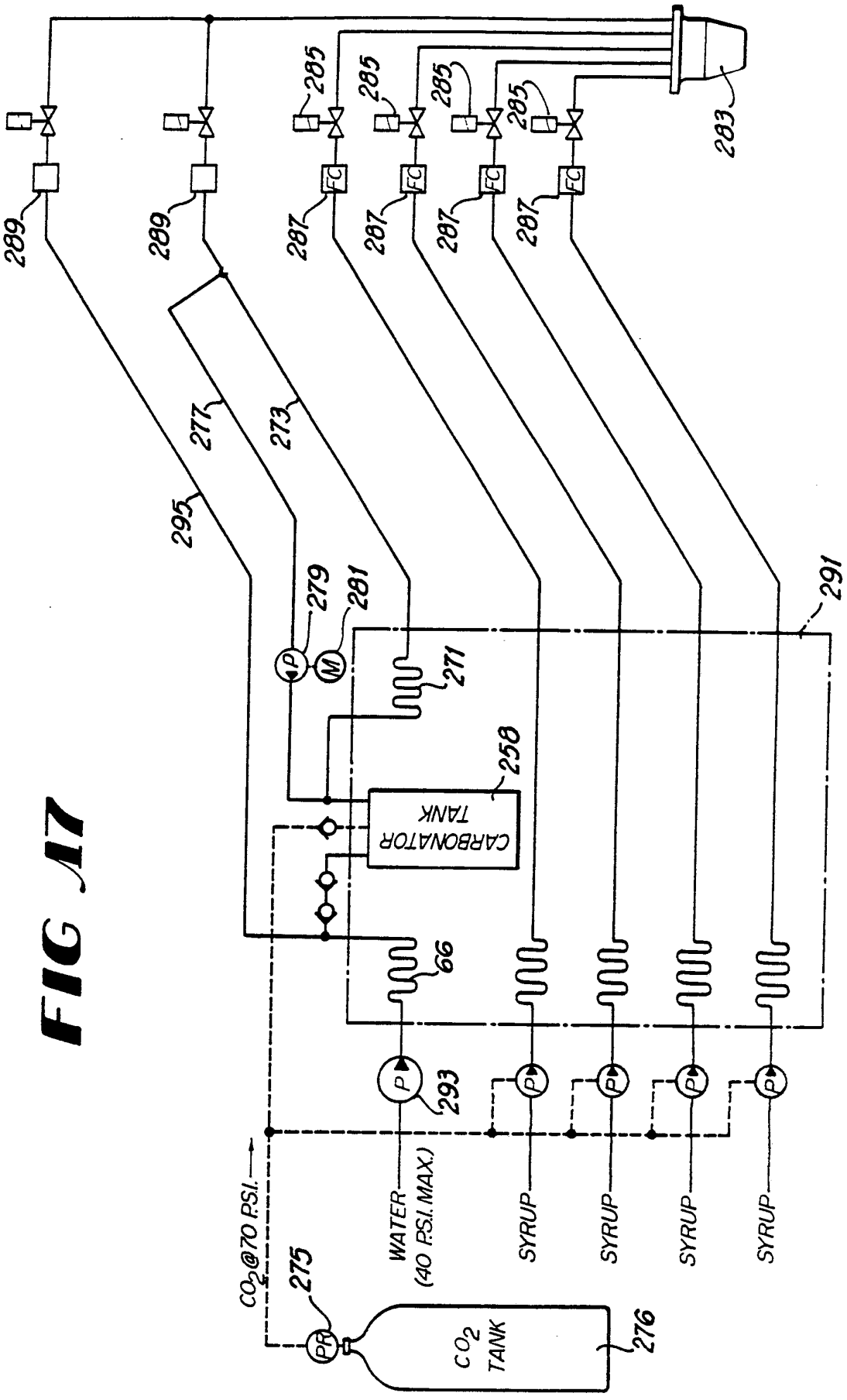
283
285
285
285
285
287
287
287
287
289
289
291
295
277
273
279
281
271
258
CARBONATOR TANK
66
293
275
276
CO_2@70 P.S.I.
WATER (40 P.S.I. MAX.)
SYRUP
SYRUP
SYRUP
SYRUP
CO_2 TANK

FIG 17

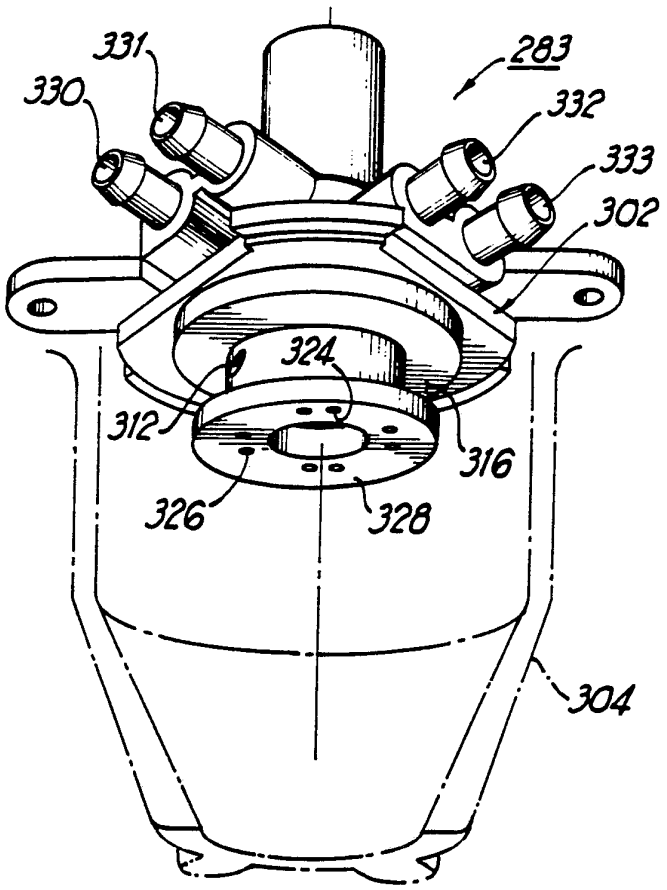
331
330
283
332
333
302
324
312
316
326
328
304

FIG 18

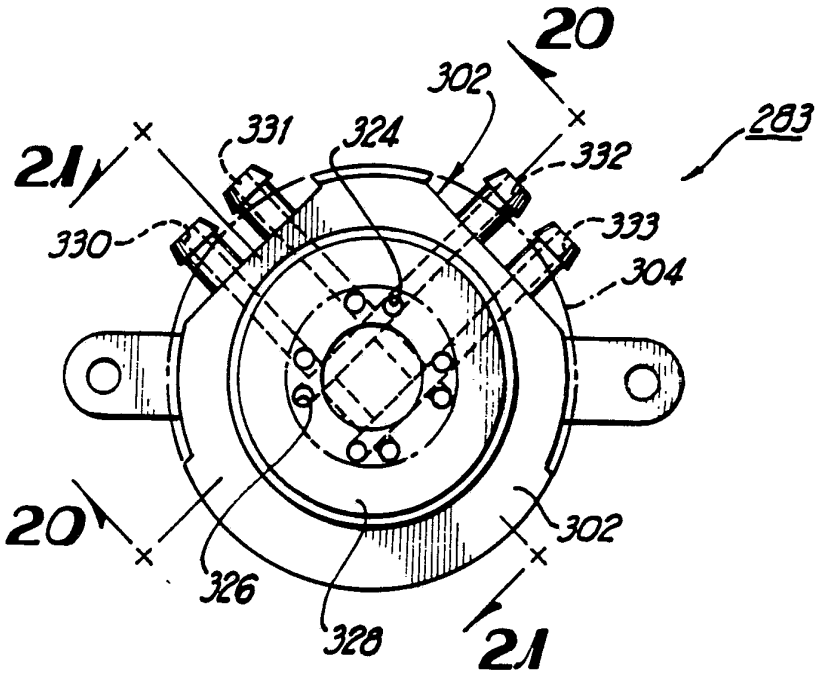
20
302
331
324
283
21
332
330
333
304
20
326
302
328
21

FIG 19

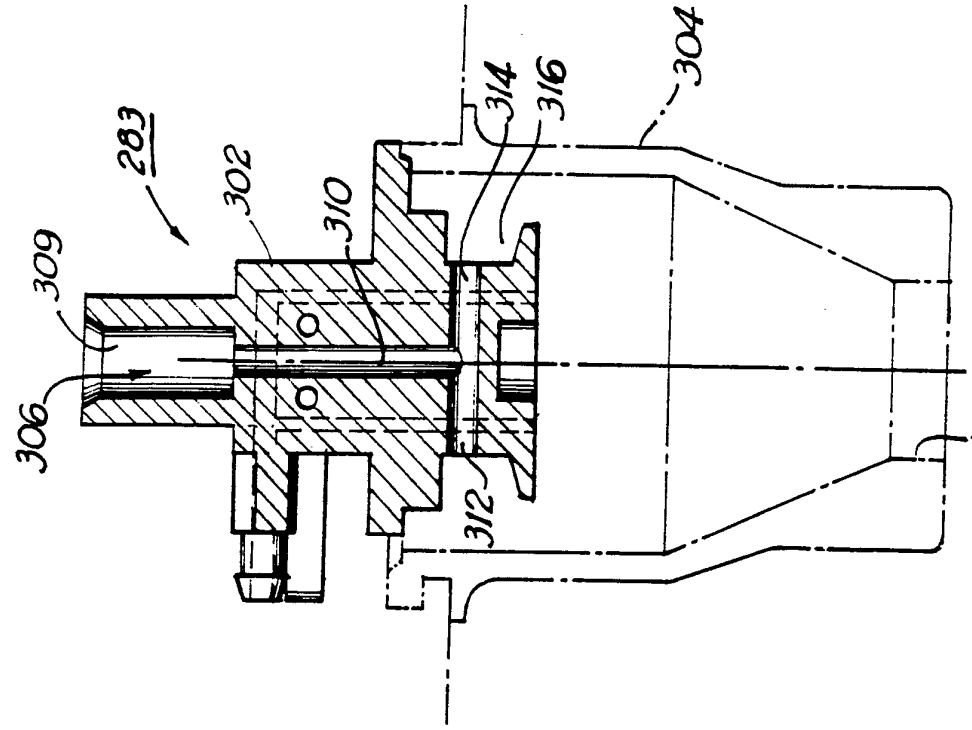
283
302
310
314
316
304
309
306
312
318

FIG 2A

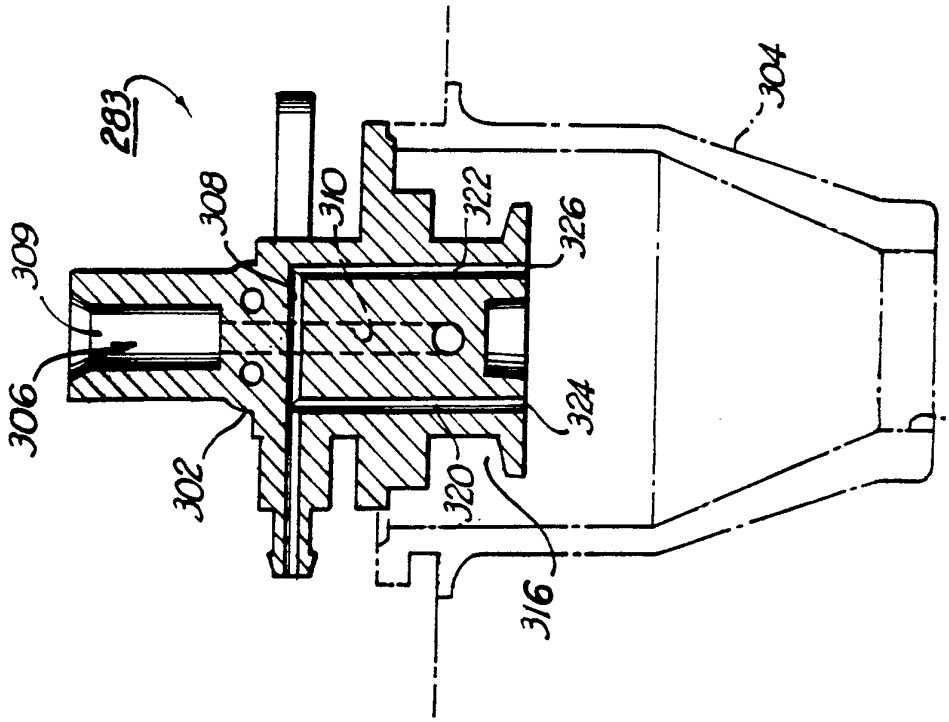
283
304
308
310
322
326
309
306
324
318
302
320
316

FIG 2C

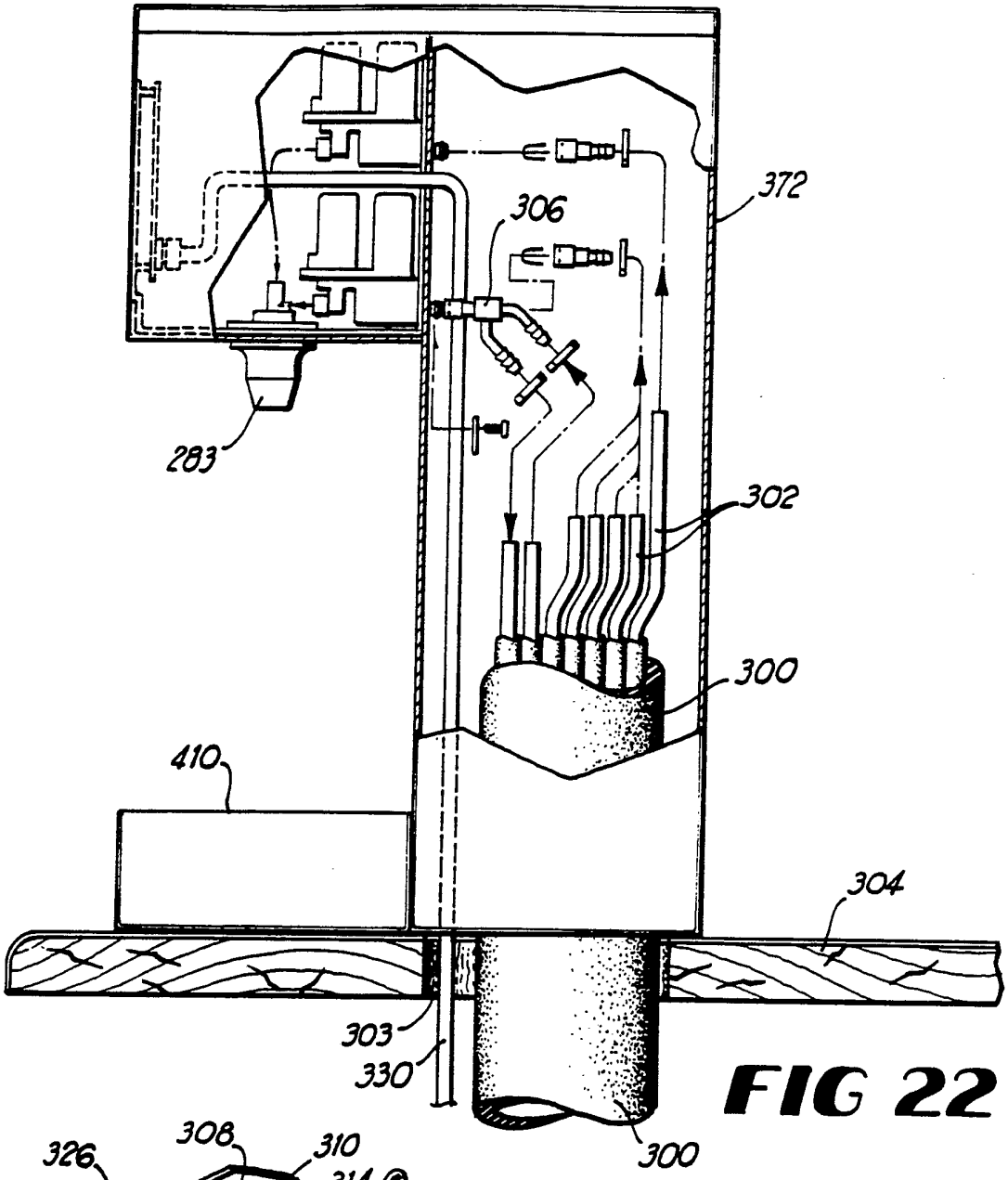
372
306
283
302
300
410
304
303
330
300

FIG 22

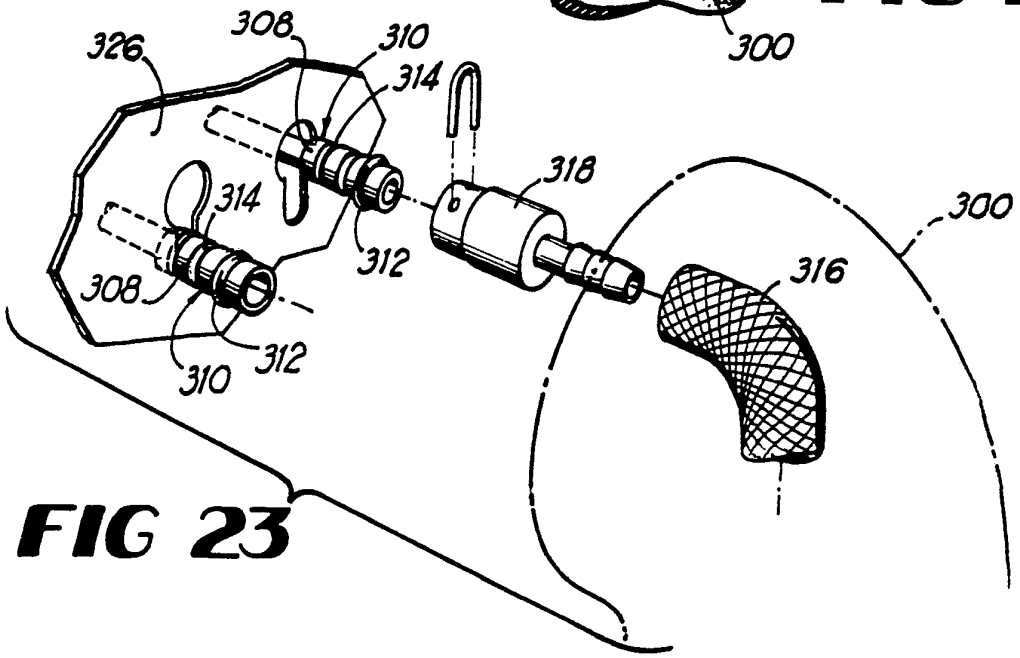
326
308
310
314
318
300
314
312
316
308
312
310

FIG 23

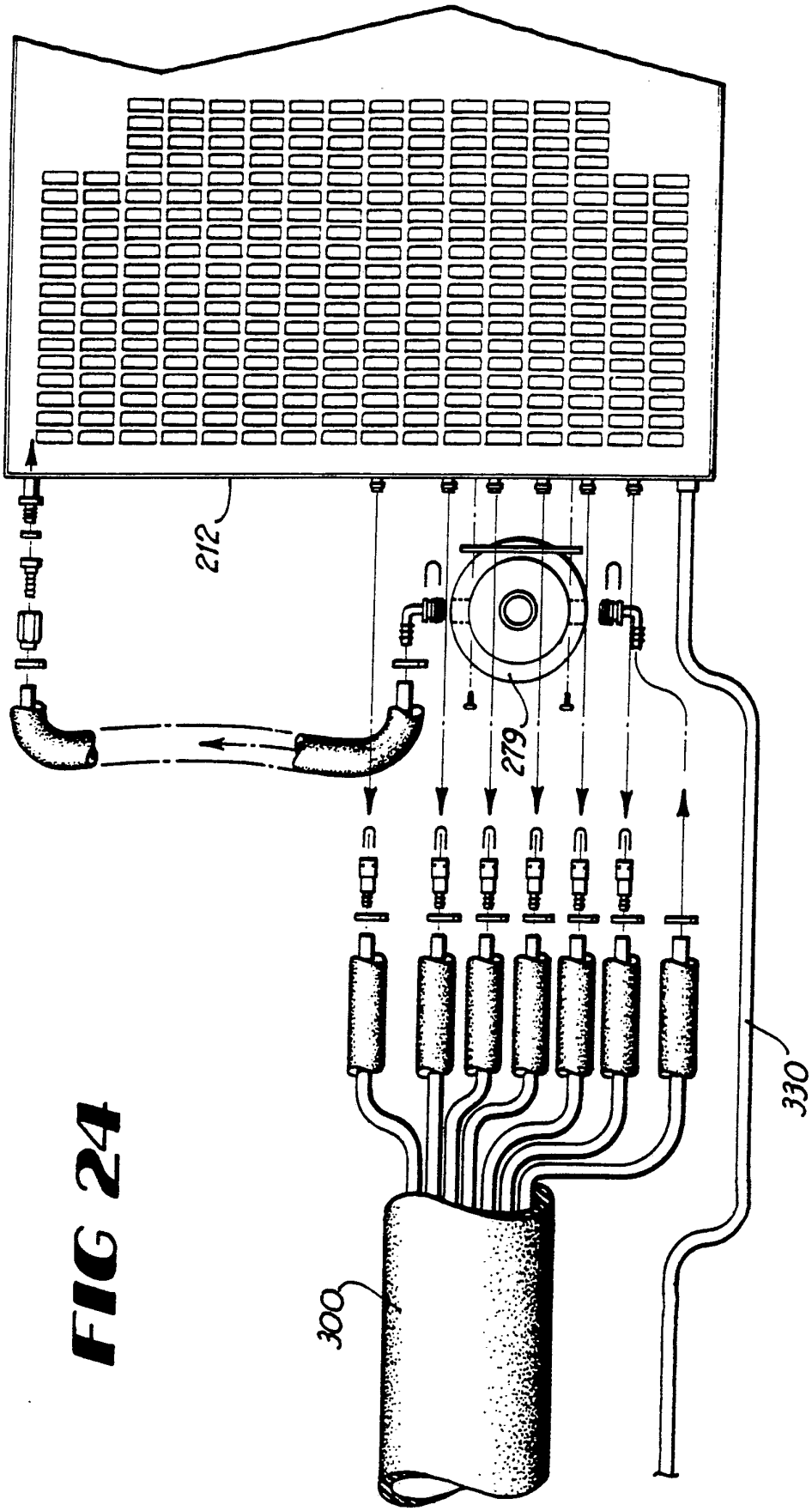

FIG 24

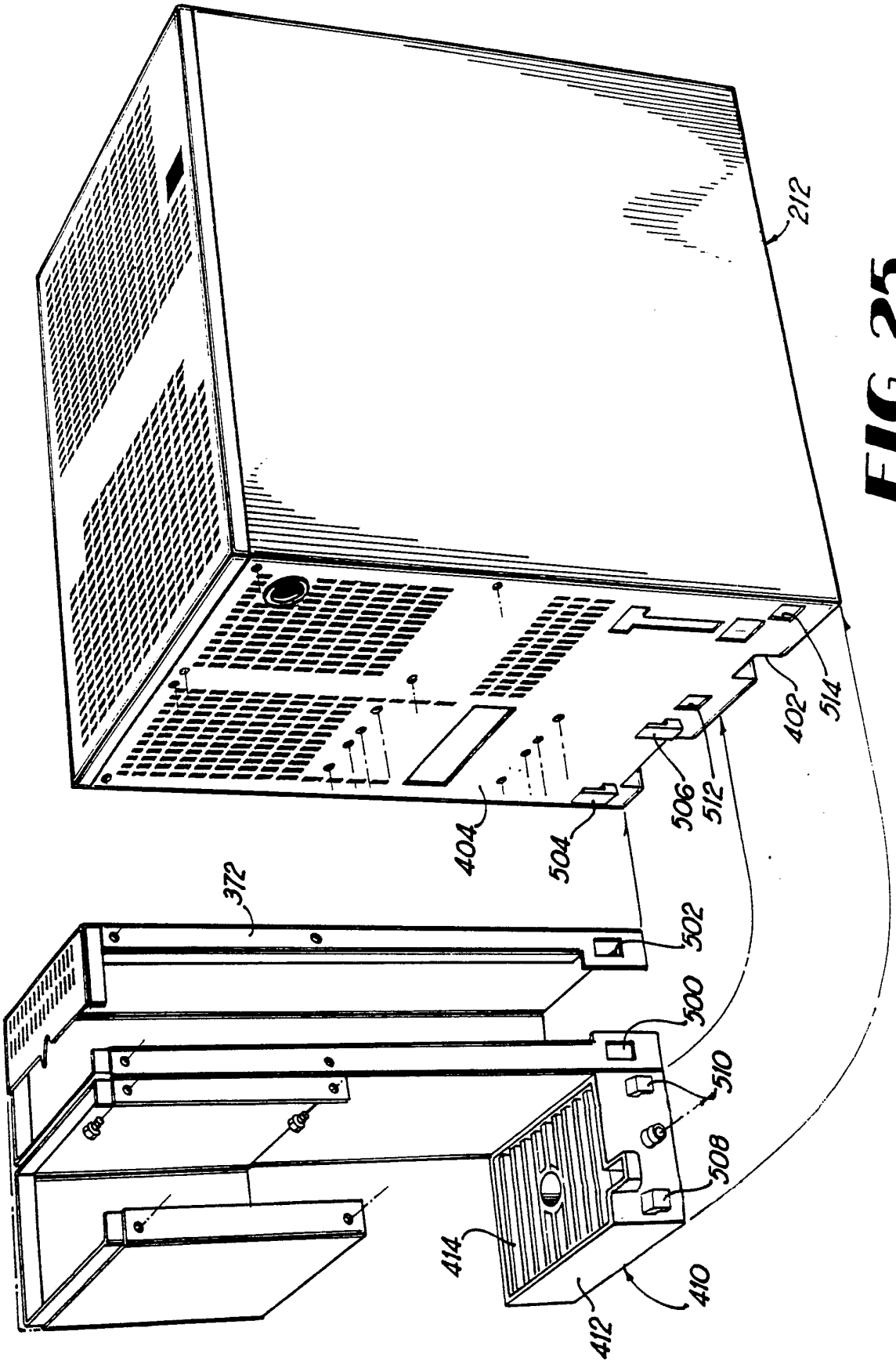

FIG 25

INTERNATIONAL SEARCH REPORT

International Application No PCT/US 91/03410

I. CLASSIFICATION OF SUBJECT MATTER (if several classification symbols apply, indicate all)[6]

According to International Patent Classification (IPC) or to both National Classification and IPC

Int.Cl. 5 B67D1/06 ; B67D1/00 ; F25D23/00 ; B67D1/08

II. FIELDS SEARCHED

Minimum Documentation Searched[7]

Classification System	Classification Symbols
Int.Cl. 5	B67D ; F25D

Documentation Searched other than Minimum Documentation to the Extent that such Documents are Included in the Fields Searched[8]

III. DOCUMENTS CONSIDERED TO BE RELEVANT[9]

Category °	Citation of Document,[11] with indication, where appropriate, of the relevant passages[12]	Relevant to Claim No.[13]
Y	EP,A,319 348 (COCA-COLA COMPANY) June 7, 1989 cited in the application see the whole document ---	1
Y	EP,A,339 387 (KKW KULMBACHER KLIMAGERÄTE-WERK GMBH) November 2, 1989 see claims 1,2; figure 1 ---	1
A	EP,A,299 767 (COCA-COLA COMPANY) January 18, 1989 see column 3, line 23 - column 3, line 35 see column 5, line 14 - column 5, line 25; figures 1,2,9 ---	2
A	EP,A,165 792 (THE CORNELIUS COMPANY) December 27, 1985 see page 2, line 33 - page 3, line 1 see page 12, line 25 - page 13, line 19; figure 1 ---	4,5,8

-/--

° Special categories of cited documents : [10]

"A" document defining the general state of the art which is not considered to be of particular relevance

"E" earlier document but published on or after the international filing date

"L" document which may throw doubts on priority claim(s) or which is cited to establish the publication date of another citation or other special reason (as specified)

"O" document referring to an oral disclosure, use, exhibition or other means

"P" document published prior to the international filing date but later than the priority date claimed

"T" later document published after the international filing date or priority date and not in conflict with the application but cited to understand the principle or theory underlying the invention

"X" document of particular relevance; the claimed invention cannot be considered novel or cannot be considered to involve an inventive step

"Y" document of particular relevance; the claimed invention cannot be considered to involve an inventive step when the document is combined with one or more other such documents, such combination being obvious to a person skilled in the art.

"&" document member of the same patent family

IV. CERTIFICATION

Date of the Actual Completion of the International Search	Date of Mailing of this International Search Report
05 SEPTEMBER 1991	04. 10. 91
International Searching Authority	**Signature of Authorized Officer**
EUROPEAN PATENT OFFICE	VAN DEN BOSSCHE E.

Form PCT/ISA/210 (second sheet) (January 1985)

III. DOCUMENTS CONSIDERED TO BE RELEVANT (CONTINUED FROM THE SECOND SHEET)

Category °	Citation of Document, with indication, where appropriate, of the relevant passages	Relevant to Claim No.
A	GB,A,2 194 508 (IMI CORNELIUS LIMITED) March 9, 1988 see page 2, line 49 - page 2, line 60; figure 2 ---	4,6-8

ANNEX TO THE INTERNATIONAL SEARCH REPORT ON INTERNATIONAL PATENT APPLICATION NO.

US 9103410
SA 48043

This annex lists the patent family members relating to the patent documents cited in the above-mentioned international search report.
The members are as contained in the European Patent Office EDP file on
The European Patent Office is in no way liable for these particulars which are merely given for the purpose of information.

05/09/91

Patent document cited in search report	Publication date	Patent family member(s)	Publication date
EP-A-319348	07-06-89	AU-A- 2519788	08-06-89
		JP-A- 2004699	09-01-90
EP-A-339387	02-11-89	DE-U- 8816413	29-06-89
EP-A-299767	18-01-89	US-A- 4836414	06-06-89
		AU-B- 611165	06-06-91
		AU-A- 1829088	19-01-89
		JP-A- 1045292	17-02-89
EP-A-165792	27-12-85	AU-A- 4376585	02-01-86
		JP-A- 61076867	19-04-86
		US-A- 4979647	25-12-90
GB-A-2194508	09-03-88	None	