April 11, 1944. J. F. RIDER 2,346,396

OSCILLATOR FOR SINE WAVES AND SQUARE WAVES

Filed June 30, 1942

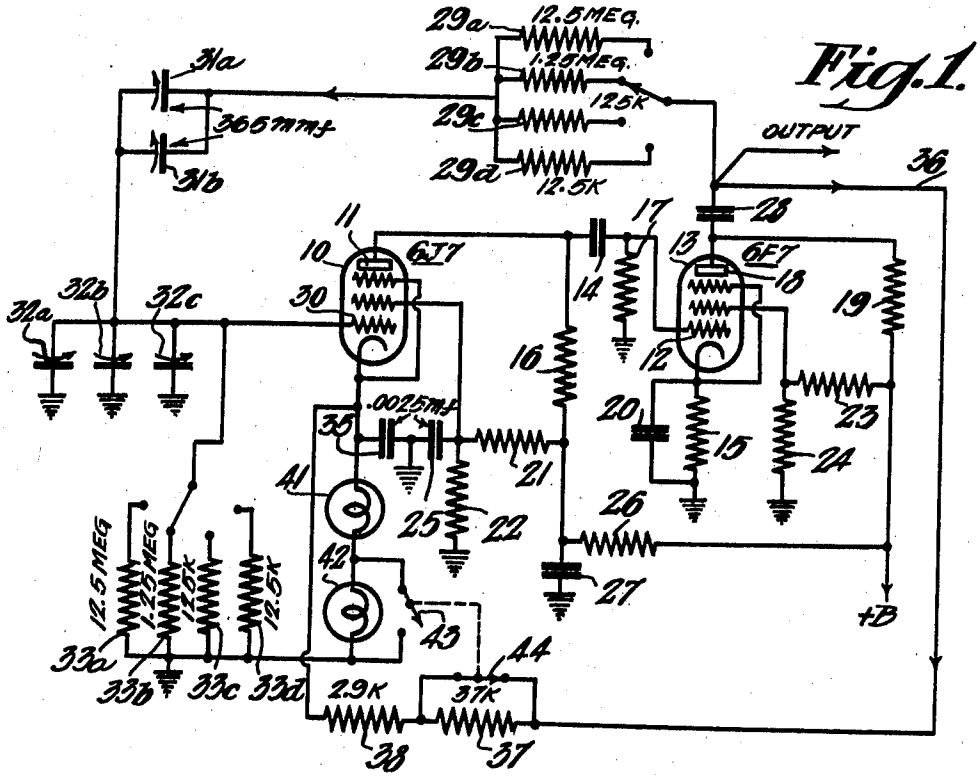

Fig. 1.

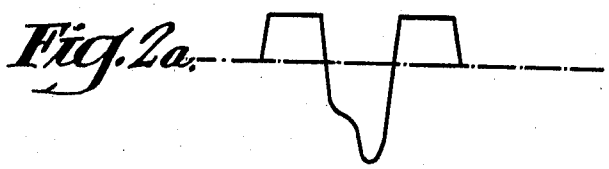

Fig. 2a.

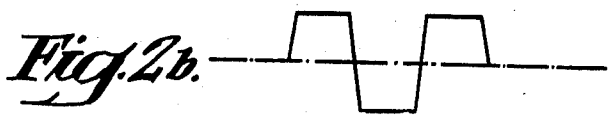

Fig. 2b.

Inventor
John F. Rider

By
C. Q. Tuska

Attorney

Patented Apr. 11, 1944 2,346,396

UNITED STATES PATENT OFFICE

2,346,396

OSCILLATOR FOR SINE WAVES AND SQUARE WAVES

John F. Rider, New York, N. Y., assignor to Radio Corporation of America, a corporation of Delaware

Application June 30, 1942, Serial No. 449,069

4 Claims. (Cl. 250—36)

My invention relates to oscillators of the resistor-capacitor type having no resonant circuits and particularly to oscillators designed to supply signals covering a wide range of predetermined frequencies for measuring or testing purposes or the like.

For measuring and testing equipment, it is sometimes desirable to have available either a sine wave signal or a square wave signal which may be produced at known frequencies within a wide frequency range. The usual practice has been to obtain such signals from separate sine wave and square wave generators.

An object of the present invention is to provide an improved simple and reliable oscillator circuit for producing at predetermined frequencies either a sine wave output or a square wave output.

In a preferred embodiment of the invention, the oscillator comprises two vacuum tubes which are resistance coupled and which are provided with both regenerative and degenerative feedback circuits. The regenerative circuit includes a resistor-capacitor network that has a frequency selectivity characteristic whereby sine wave oscillators may be produced, the harmonic frequency components being held to very small amplitudes by the small ratio of regeneration to degeneration at the harmonic frequencies.

I have discovered that by changing some of the circuit elements to decrease the amount of degeneration, the oscillator changes to a square wave oscillator whereby it is possible, by means of a simple switching arrangement, to obtain from the circuit either sine waves or square waves.

The invention will be better understood from the following description taken in connection with the accompanying drawing in which

Figure 1 is a circuit diagram of an oscillator embodying my invention, and

Figures 2*a* and 2*b* are graphs which are referred to in explaining the operation of the circuit of Figure 1 as a square wave oscillator.

Figure 1 illustrates a particular embodiment of the invention comprising a pentode 10 and a pentode 13. The anode or plate 11 of pentode 10 is resistance coupled to the control grid 12 of a pentode 13, by means of a coupling condenser 14, the plate resistor 16 of pentode 10 and the grid leak resistor 17 of pentode 13. Positive D. C. voltages from a suitable source (not shown) are supplied to the anode 11 of tube 10 and to the anode 18 of tube 13 through resistors 16 and 19, respectively. Suitable positive voltages for the screen grids of tubes 10 and 13 are supplied from voltage divided resistors 21, 22 and 23, 24, respectively. A bypass capacitor 25 is connected across resistor 22. A filter and voltage-reducing resistor 26 and a filter capacitor 27 may be provided in the anode and screen grid voltage supply circuit for the pentode 10. A suitable operating bias for the tube 13 may be provided by a cathode resistor 15 which is bypassed by a capacitor 20.

Regenerative feedback is provided from the anode of tube 13 through a coupling or blocking capacitor 28, one of the resistors 29*a*, 29*b*, 29*c* or 29*d*, and the variable capacitors 31*a* and 31*b* in series therewith to the control grid 30 of the tube 10. The regenerative circuit also includes a parallel resistor-capacitor combination in the control grid circuit of the tube 10. This parallel combination comprises variable capacitors 32*a*, 32*b* and 32*c* connected between the grid 30 and ground and in shunt relation to one of the resistors 33*a*, 33*b*, 33*c* or 33*d* which are likewise connected between the grid 30 and ground. By switching in different resistors and/or by changing the capacity of capacitors in the regenerative feedback circuit, the frequency of the oscillator output may be changed to different values indicated by calibrated dials or the like (not shown).

Degenerative feedback is also provided by coupling the anode of tube 13 to the cathode of tube 10 through the capacitor 28, a conductor 36 and resistors 37 and 38, and by including resistance between the cathode of tube 10 and ground preferably in the form of tungsten filament lamps 41 and 42. The lamps may be shunted by a capacitor 35. The lamps 41 and 42 in the example illustrated are 110 volt, 6 watt, tungsten filament lamps. They may be replaced by other elements having a positive temperature coefficient or by resistors which do not change in resistance value during operation of the oscillator. Positive temperature coefficient devices are preferred, however, because they control the amplitude of oscillation of the oscillator due to the fact that the amount of degeneration is increased when the resistance of such devices is increased in response to an increase in amplitude of oscillation.

Switches 43 and 44 are provided across the lamp 42 and the resistor 37, respectively, for switching the oscillator to either sine wave or square wave oscillation. These switches may be ganged as indicated by the broken line. With

the switches 43 and 44 in the positions illustrated to provide maximum degeneration, the oscillator supplies sine waves. This is because the regeneration is maximum at a certain frequency since the network comprising the series combination of resistor 29*b* and capacitor 31*a*—31*b* and the parallel combination of resistor 33*b* and capacitor 32*a*—32*b*—32*c* has a frequency selective characteristic. Also, the degeneration is sufficient to reduce to a small amplitude any components differing in frequency from that at which maximum regeneration occurs.

The oscillator operates as a square wave oscillator, however, when the switch 43 is closed and the switch 44 is opened so that the amount of degeneration is greatly reduced. The frequency of oscillation simultaneously goes to one-half of the frequency of oscillation as a sine wave oscillator. It appears likely that the apparatus now operates as a multivibrator but I do not wish to limit the invention to any particular theory of operation. When operating in this manner, the voltage between the anode 11 of the tube 10 and ground has the wave shape shown in Fig. 2*a*, while the voltage at the output, i. e., between the anode 18 of tube 13 and ground, has the wave shape shown in Fig. 2*b*.

In the drawing, the tube types and the values of various circuit elements have been indicated, merely by way of example in microfarads, micromicrofarads, megohms and thousands of ohms, the latter being indicated by the letter *k*.

I claim as my invention:

1. An oscillator for producing either a sine wave output or a square wave output which includes two amplifier tubes each having an input circuit and an output circuit, means for coupling the output circuit of the first of said tubes to the input circuit of the second of said tubes, resistor-capacitor means for regeneratively coupling the output circuit of said second tube to the input circuit of said first tube, said regenerative coupling circuit having a frequency response such that it provides more regeneration at a predetermined frequency than at any other frequency, means for providing sufficient degenerative coupling between the output and input circuits of the second and first tubes, respectively, to hold to a comparatively small amplitude any signal components other than the signal component at said predetermined frequency whereby a sine wave output is produced and switching means for reducing said degenerative coupling sufficiently to cause the oscillator to change its mode of oscillation and oscillate to produce a square wave output.

2. An oscillator for producing either a sine wave output or a square wave output which includes two amplifier tubes each having an input circuit and an output circuit, means for coupling the output circuit of the first of said tubes to the input circuit of the second of said tubes, resistor-capacitor means for regeneratively coupling the output circuit of said second tube to the input circuit of said first tube, said regenerative coupling circuit having a frequency response such that it provides more regeneration at a predetermined frequency than at any other frequency, means including a resistor element in the common part of the anode-cathode, grid-cathode circuits of said first tube for providing sufficient degenerative coupling between the output and input circuits of the second and first tubes, respectively, to hold to a comparatively small amplitude any signal components other than the signal component at said predetermined frequency whereby a sine wave output is produced and switching means for reducing said degenerative coupling sufficiently to cause the oscillator to change its mode of oscillation and oscillate to produce a square wave output.

3. An oscillator for producing either a sine wave output or a square wave output which includes two amplifier tubes each having an input circuit and an output circuit, means for coupling the output circuit of the first of said tubes to the input circuit of the second of said tubes, resistor-capacitor means for regeneratively coupling the output circuit of said second tube to the input circuit of said first tube, said regenerative coupling circuit having a frequency response such that it provides more regeneration at a predetermined frequency than at any other frequency, means for providing sufficient degenerative coupling between the output and input circuits of the second and first tubes, respectively, to hold to a comparatively small amplitude any signal components other than the signal component at said predetermined frequency whereby a sine wave output is produced, said degenerative coupling means including two serially connected resistor elements in the common part of the anode-cathode, gride-cathode circuits of said first tube which have a positive temperature coefficient, and switching means for shorting out one of said resistor elements and thereby reducing said degenerative coupling sufficiently to cause the oscillator to change its mode of oscillation and oscillate to produce a square wave output.

4. An oscillator for producing either a sine wave output or a square wave output which includes two amplifier tubes each having an input circuit and an output circuit, means for coupling the output circuit of the first of said tubes to the input circuit of the second of said tubes, resistor-capacitor means for regeneratively coupling the output circuit of said second tube to the input circuit of said first tube, said regenerative coupling circuit having a frequency response such that it provides more regeneration at a predetermined frequency than at any other frequency, means including resistance in the common part of the anode-cathode, grid-cathode circuits of said first tube for providing sufficient degenerative coupling between the output and input circuits of the second and first tubes, respectively, to hold to a comparatively small amplitude any signal components other than the signal component at said predetermined frequency whereby a sine wave output is produced, said degenerative coupling means also including a resistive connection from the plate of the second tube to the cathode of the first tube, and switching means for reducing said degenerative coupling sufficiently to cause the oscillator to change its mode of oscillation and oscillate to produce a square wave output, said switching means including means for shorting out part of said resistance located in the common part of said anode-cathode, grid-cathode circuits and for increasing the resistance of said resistive connection.

JOHN F. RIDER.