Dec. 10, 1957 A. G. DEAN 2,815,722

MARGINAL RAIL FOR COVER STRIP RETAINING PANELS, ESPECIALLY FOR RAILWAY CAR

Original Filed Nov. 1, 1948

FIG. 1

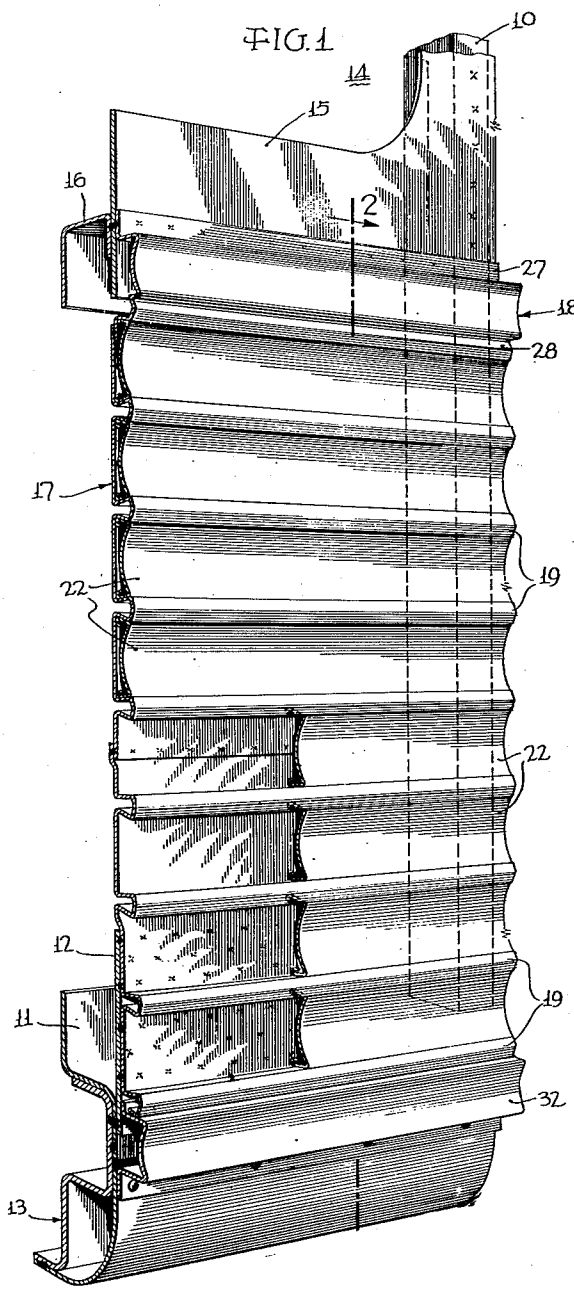

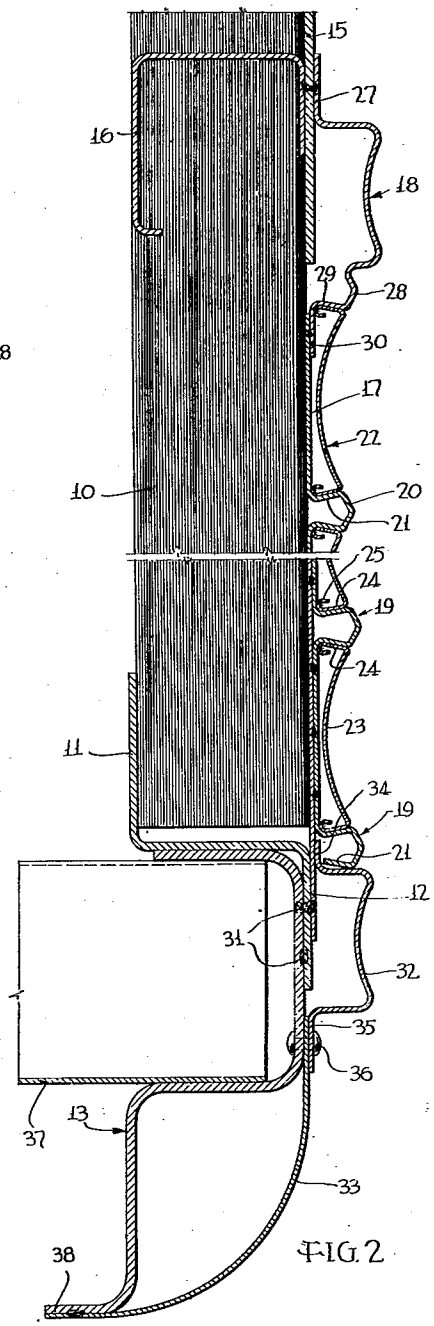

FIG. 2

INVENTOR.
Albert G. Dean

BY Maurice A. Crews

ATTORNEY

United States Patent Office 2,815,722 Patented Dec. 10, 1957

2,815,722

MARGINAL RAIL FOR COVER STRIP RETAINING PANELS, ESPECIALLY FOR RAILWAY CAR

Albert G. Dean, Narberth, Pa., assignor to The Budd Company, Philadelphia, Pa., a corporation of Pennsylvania

Continuation of abandoned application Serial No. 57,796, November 1, 1948. This application February 18, 1955, Serial No. 489,151

3 Claims. (Cl. 105—401)

The invention relates to the formation and attachment of marginal rails to the framework of vehicle, especially railway car bodies. More specifically, the invention relates to that type of vehicle body which is provided with an outer trim sheathing or is at least provided with means for retaining such sheathing.

The application is a continuation of applicant's originally co-pending application Serial No. 57,796, filed November 1, 1948, under the same title, which is now abandoned.

In certain respects, the invention relates to improvements of the structure disclosed in the inventor's application Serial No. 782,000, filed October 24, 1947, which matured into Patent No. 2,592,545 on April 15, 1952, for "Cover Panels for Vehicles, Especially Railway Cars," of which the present application is a continuation-in-part. More specifically, the invention is directed to improvements of the structure disclosed in the simultaneously filed application Serial No. 57,683 of Michael Watter, which matured into Patent No. 2,620,750 on December 9, 1952, entitled "Panel, and Panel Cover, Especially for Railway Car."

A main object of the invention is an improved construction and attachment of rails, such as belt and rub rails, along a panel provided with cover-sheathing-retaining nodes.

This object, broadly speaking, is achieved by using marginal cover-sheathing-retaining nodes as means for holding the marginal rails in place.

The briefly outlined objects and features of the invention will be more fully understood from the embodiment illustrated in the attached drawing and from the following detailed description thereof.

In the drawing:

Fig. 1 is a fragmentary perspective side elevation, partially in transverse section, of the lower portion of side wall and adjoining underframe side sill of a sheet metal railway car; and

Fig. 2 is a fragmentary section, on a larger scale, along line 2—2 of Fig. 1.

The railway car body shown fragmentarily in the drawing comprises a plurality of longitudinally spaced upright posts **10**, only one being visible. Posts **10** have their lower ends interconnected by a bottom sill or chord comprising a Z-section **11** and a gusset plate **12**. The outer arms of section **11** and plate **12** are overlappingly secured to each other and to the web of underframe side sill **13**. In the region of window openings **14** (only one opening is shown fragmentarily in the drawing), the posts are interconnected by a structural dead light panel **15** and window sill members **16**.

A shear panel **17** and a belt rail **18** structurally interconnect posts **10**, gusset plate **12**, dead light panel **15**, and window sill members **16**. Shear panel **17** has longitudinally extending nodes or corrugations **19**. Each node **19** has a top wall **20** and side walls **21** forming together an inwardly facing channel section. Top walls **20** are profiled to give the appearance of narrow trim or molding strips. The side walls **21** of each node converge inwardly toward each other so as to present undercut surfaces adapted to retain removable trim sheathing in the form of cover plates or strips **22**. Each plate **22** has a web **23**, preferably fluted or otherwise curved in section, and marginal flanges **24** with curled in edges **25**.

Plates **22** consist of resilient material, such as cold rolled austenitic stainless sheet steel. The thickness may be 0.02 inch. Their width and the angles between their flanges **24** and their webs **23** are such that each plate can be sprung into place between the side walls **21** of successive nodes **19** and will be held in place by the resiliency of the plate as well as by the engagement of the flanges **24** with the side walls **21**. The width of the flanges **24** is such that the curled in edges **25** nest in the angle between the side walls **24** and the adjoining main portions of panel **17**.

The construction described so far is either known or forms the subject matter of the originally co-pending Watter application, now Patent 2,620,750, above referred to.

Belt rail **18** is a channel section which has its upwardly directed marginal flange **27** secured, such as by spot welding, to dead light panel **15** and window sill **16**. The lower portion of rail **18** is provided with extensions **28**, **29** shaped corresponding to top wall **20** and one side wall **21**, respectively, of one of the nodes **19** so as to form a marginal node of itself. Extension **29** is continued by a downwardly directed flange **30** which is overlappingly secured, such as by spot welding, to the upper margin of shear panel **17**. Belt rail **18**, therefore, may be considered as part or extension of shear panel **17**, to which it is connected prior to the attachment of panel and belt rail to adjoining body members **10**, **12**, **15** and **16**.

Along its lower margin, shear panel **17** terminates in a node **19** which has its lower side wall **21** cut off slightly outside the plane of the inner surface of panel **17** so as to leave a narrow slot between the edge of this wall **21** and gusset plate **12**.

After panel **17** has been connected with the members **10**, **12**, **15** and **16** to form part of the side wall subassembly, such side subassembly is secured to the outer web of underframe sill **13**, for instance, by electric spot welds, at **31**. This is done prior to the attachment of rub rail **32** and skirt molding **33**.

Rub rail **32** has an upwardly directed marginal flange **34** which is merely pushed between the edge of the lowermost node wall **21** and gusset plate **12**. A downwardly directed flange **35** of the rub rail and upper margin of skirt molding **33** are overlappingly secured to the web of underframe sill **13** by blind rivets **36** or other connecting means applicable exclusively from the outside of the car. The use of such means applicable from the outside is important because rub rail and skirt rail suffer damage occasionally and have to be replaced, and because in the finished car, the inside of the web of rail **13** is practically inaccessible on account of the underframe shear panel **37** and the floor boards (not shown) secured above the top arm of sill **13**. With the described construction it is necessary merely to break the comparatively widely spaced blind rivets **35**, whereupon the rub rail **32** may be taken off by pulling its flange **34** from under the lowermost wall **21** and by putting in a new belt rail and applying a new set of blind rivets.

The lower margin of skirt panel **33** may be spot welded to flange **38** of rail **13** by relatively widely spaced welds. This connection is freely accessible even after completion of the car, and the welds can be broken and replaced by new welds if the skirt molding **33** requires replacement.

The formation of belt rail **18** and its joinder with shear panel **17** form the subject matter of applicant's applica-

ation filed under the same title simultaneously herewith as a division of the aforesaid original application Serial No. 57,796.

While only one embodiment of the invention has been shown and described, it should be understood that the invention is susceptible to modifications and refinements falling within the spirit and the scope of the invention. For instance, the invention is not restricted to the specifically illustrated formation of the nodes as integral one-piece parts of the shear panel, but the invention is also applicable to constructions in which separately manufactured nodes serve for holding the cover sheathing members 22. Another example of a modification is employment of the same form of rail under the window opening as well as along the lower margin of the side wall. In short, the invention is not restricted to the illustrated embodiment or to the specifically mentioned modifications, but is directed to all constructions.

What is claimed is:

1. In a railway car or similar vehicle body, a panel provided with cover-strip-retaining nodes, said nodes being of inwardly facing U-section and having side walls, one of the nodes being provided along a margin of the panel, said panel being secured to a supporting structure except for the outer one of said side walls of said node along the margin, said outer side wall leaving a slot between its edge and the supporting structure, a molding section having a side wall and a lateral flange, said outer side wall of the marginal node abutting said side wall of said molding section, and said flange extending into said slot and being held by the inner edge of said outer side wall of the marginal node.

2. In a vehicle body, a side wall structure having a plurality of vertical frame members spaced from each other in the longitudinal direction of the vehicle, a longitudinally extending panel on the outside of said members provided on its outside with horizontally arranged outwardly projecting nodes of inwardly facing U-section, said nodes having side walls and said panel being secured by its portions between said side walls of the nodes to said frame members, and a hollow-section chord member being arranged along a longitudinal margin of said panel, a node being arranged where said panel and chord member meet and abutting the latter by one of its side walls, said last-named side wall being formed as part of connecting means of said chord member to said panel and thereby to said frame members.

3. In a railway car or similar vehicle body, a panel provided with longitudinally extending nodes and secured to longitudinally spaced frame members extending transversely to the longitudinal extent of the body, said nodes being of inwardly facing U-section, one of the nodes being provided along and having its one side wall defining a longitudinal margin of the panel, said node side wall being outwardly spaced from said frame members, a molding section having a side wall and a lateral flange, said side wall of the molding section and said flange being overlappingly engaged and held in place exclusively by said node side wall.

References Cited in the file of this patent

UNITED STATES PATENTS

434,353	Northrop	Aug. 12, 1890
973,622	Budd	Oct. 25, 1910
1,060,432	De Canio	Apr. 29, 1913
1,842,282	Place	Jan. 19, 1932
2,256,494	Ragsdale et al.	Sept. 23, 1941
2,294,357	Dean et al.	Aug. 25, 1942
2,513,473	Greig	July 4, 1950