Jan. 12, 1960 J. L. BOIARSKY 2,920,617

APPLICATOR FOR ULTRASONIC TRANSDUCER

Filed July 2, 1956

Fig. 1

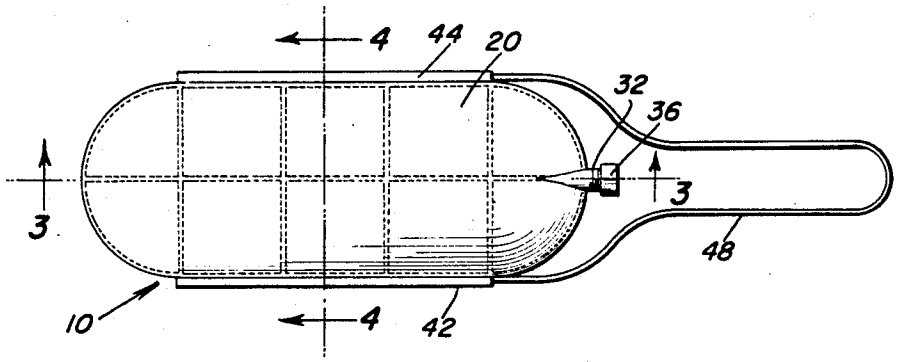

Fig. 2

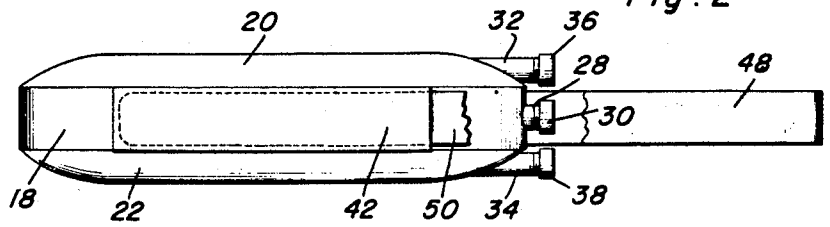

Fig. 3

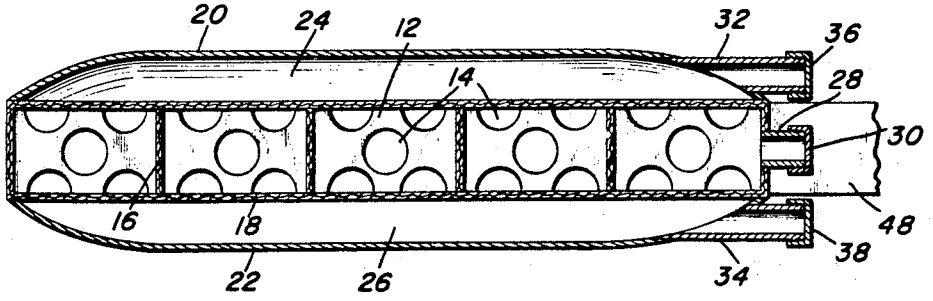

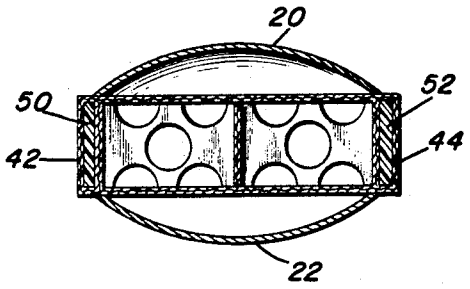

Fig. 4

Julius L. Boiarsky
INVENTOR.

BY Clarence A. O'Brien and Harvey B. Jacobson
Attorneys

United States Patent Office 2,920,617
Patented Jan. 12, 1960

2,920,617

APPLICATOR FOR ULTRASONIC TRANSDUCER

Julius L. Boiarsky, Charleston, W. Va.; Hortense Marguerite Boiarsky, executrix of the will of Julius L. Boiarsky, deceased, assignor to herself individual

Application July 2, 1956, Serial No. 595,203

1 Claim. (Cl. 128—24)

This invention relates to an applicator for an ultrasonic energy transducer and more particularly to an arrangement of parts for use in conjunction with an ultrasonic treatment head for applying ultrasonic vibrations onto a body of a patient to be treated.

The primary object of the present invention resides in the provision of an ultrasonic energy applicator for enabling ultrasonic vibrations to be applied on the body of a patient in a convenient manner and which ultrasonic energy applicator is adapted to accommodate itself to any body contour especially to joints, prominences, and wrinkled skin surfaces.

A further object of the invention resides in the provision of an ultrasonic energy applicator for avoiding painful contact of an ultrasonic treatment head with the skin or inflammatory areas.

Since exact dosage of ultrasonic energy is virtually impossible with a moving treatment head, this invention provides means for enabling the treatment head to be held at a calculated distance from the surface of the patient's body to be treated while the patient's body is suitably cushioned.

A further object of the invention resides in the provision of an ultrasonic treatment head in which water, heavy mineral oil, or other liquid capable of transmitting ultrasonic energy can be readily deposited which liquid enables the applicator to conform to the various body contours of the patient being treated.

Still further objects and features of this invention reside in the provision of an ultrasonic energy applicator which is simple in construction, efficient in operation, and relatively inexpensive to construct thereby permitting wide use and distribution.

These, together with the various ancillary objects and features of the invention which will become apparent as the following description proceeds, are attained by this ultrasonic energy applicator, a preferred embodiment of which has been illustrated in the accompanying drawings, by way of example only, wherein:

Figure 1 is a top plan view of the ultrasonic energy applicator comprising the present invention;

Figure 2 is a side elevational view of the ultrasonic energy applicator with a portion of the handle thereof being broken away to show the construction of the closure means for the inlet opening of the mattress;

Figure 3 is an enlarged sectional detail view as taken along the plane of line 3—3 of Figure 1; and

Figure 4 is a transverse vertical sectional view as taken along the plane of line 4—4 of Figure 1 and being shown in an enlarged scale for clarity.

With continuing reference to the accompanying drawings wherein like reference numerals designate similar parts throughout the various views, reference numeral **10** generally designates the ultrasonic energy applicator comprising the present invention. The ultrasonic energy applicator **10** includes a central compartment formed of any suitable non-elastic material such as nylon, Orlon, or polyethylene, or the like, which is provided with a series of communicating holes **14** therethrough forming a honey-comb. The central compartment **12** may be divided into communicating cells by strips as at **16** and

may be bound by an outer casing **18** if desired. Bonded to the central compartment **12** are upper and lower sheaths **20** and **22** of a suitable elastic and expandable material forming compartments **24** and **26** for the ultrasonic energy applicator **10**. It is noted that the strips **16** may serve as baffles and may be formed of other material such as reinforced rubber. Further, the casing may be made of reinforced rubber and the holes **14** form cavities for reception of an energy transmitting liquid. The central compartment **12** is provided with an inlet opening in the form of a neck or conduit **28** through which fluid such as water, mineral oil, or the like may be introduced. A threaded metal cap **30** is provided for sealing the inlet opening **28**. Fluid deposited in the opening **28** will fill the various cavities **14** which communicate with each other.

A pair of conduits **32** and **34** are provided for the compartments **24** and **26** and threaded caps **36** and **38** which may be formed of metal or any other suitable material are provided for closing the conduits **32** and **34**. As may be desired, fluid may be introduced into the compartments **24** and **26**. If for example, it is desired to provide the ultrasonic treatment head with a transducer having a flat undersurface for bearing against a flat portion of the body of a patient and a convex upper surface, only the compartment **24** need be filled with the compartment **26** being allowed to remain empty. This will provide the desired shape transducer.

A pair of sheaths preferably formed of rubber reinforced material such as the material of which the casing **18** is constructed are provided and indicated at **42** and **44**. These sheaths form means for receiving the ends of a suitable handle **48**, the ends being indicated at **50** and **52**. Hence, the strap handle **48** may be readily removed and replaced so as to be easily affixed or removed from two or one ultrasonic energy transducers. This strap handle **48** has the advantages of firmness of grasp and ease of manipulation.

The foregoing is considered as illustrative only of the principles of the invention. Further, since numerous modifications and changes will readily occur to those skilled in the art, it is not desired to limit the invention to the exact construction and operation shown and described, and accordingly all suitable modifications and equivalents may be resorted to, falling within the scope of the invention as claimed.

What is claimed as new is as follows:

An applicator for an ultrasonic transducer comprising a central compartment of substantially non-elastic substance, upper and lower elastic sheaths secured to and overlying the upper and lower surfaces of said central compartment along the perimeter thereof forming upper and lower compartments between said sheaths and said central compartment, said central compartment having a plurality of holes therein communicating with each other, an inlet opening for said central compartment for filling said holes in said central compartment with ultrasonic energy transmitting fluid, a conduit communicating with each of said upper and lower compartments, and closures for sealing said inlet opening and said conduits, said central compartment having an elliptical cross-section defining a transverse axis, pockets extending parallel to said transverse axis formed on the external perimeter of said central compartment, a U-shaped handle including a pair of legs, said legs received in said pockets.

References Cited in the file of this patent

UNITED STATES PATENTS

1,371,919	Mahony	Mar. 15, 1921
2,542,781	Sawyer	Feb. 20, 1951
2,604,641	Reed	July 29, 1952
2,789,557	Davis	Apr. 23, 1957