Dec. 27, 1955 O. F. DAVIS ET AL 2,728,321

APPARATUS FOR GAS PLATING

Original Filed July 14, 1949 2 Sheets-Sheet 1

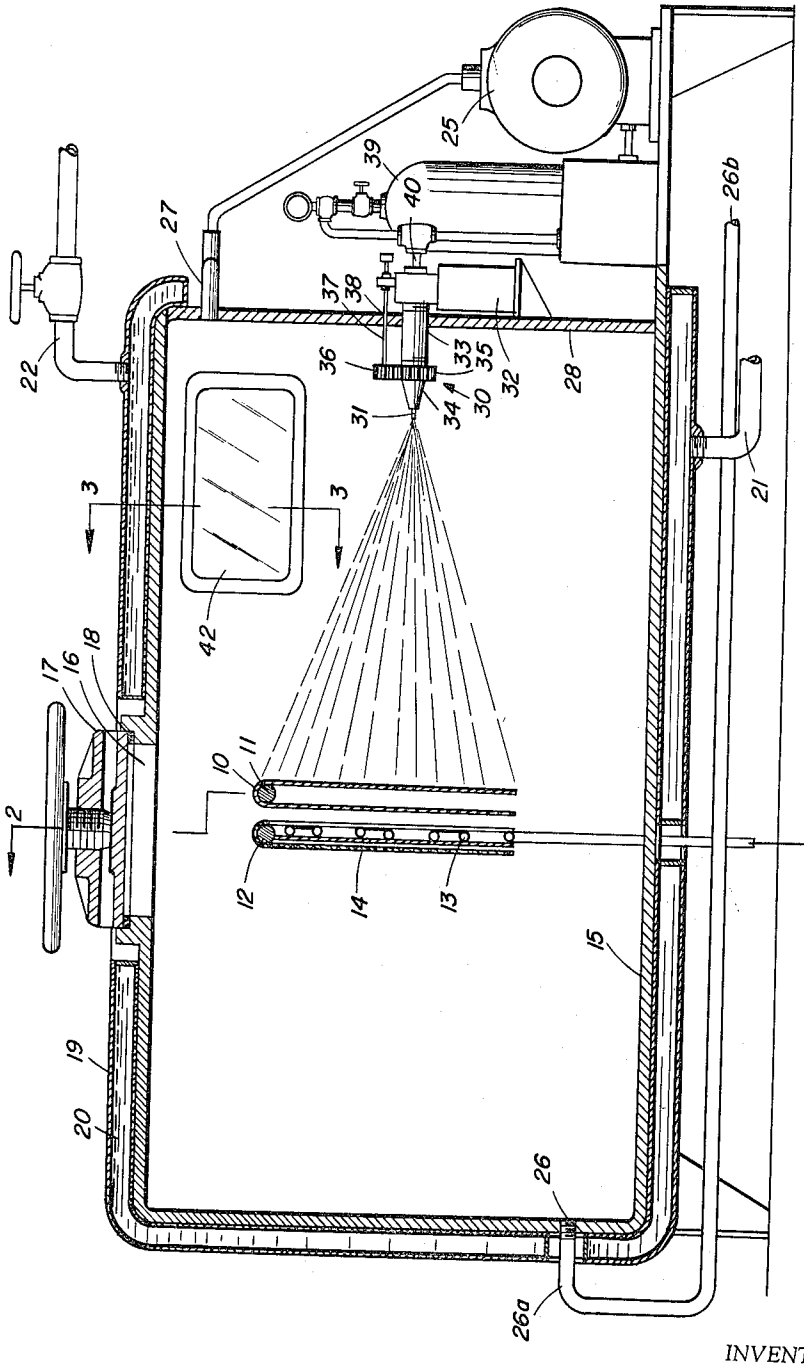

Fig. 1

INVENTORS
OLIVER F. DAVIS
HANS G. BELITZ

BY Toulmin & Toulmin

ATTORNEYS

Dec. 27, 1955 O. F. DAVIS ET AL 2,728,321

APPARATUS FOR GAS PLATING

Original Filed July 14, 1949 2 Sheets-Sheet 2

Fig. 2

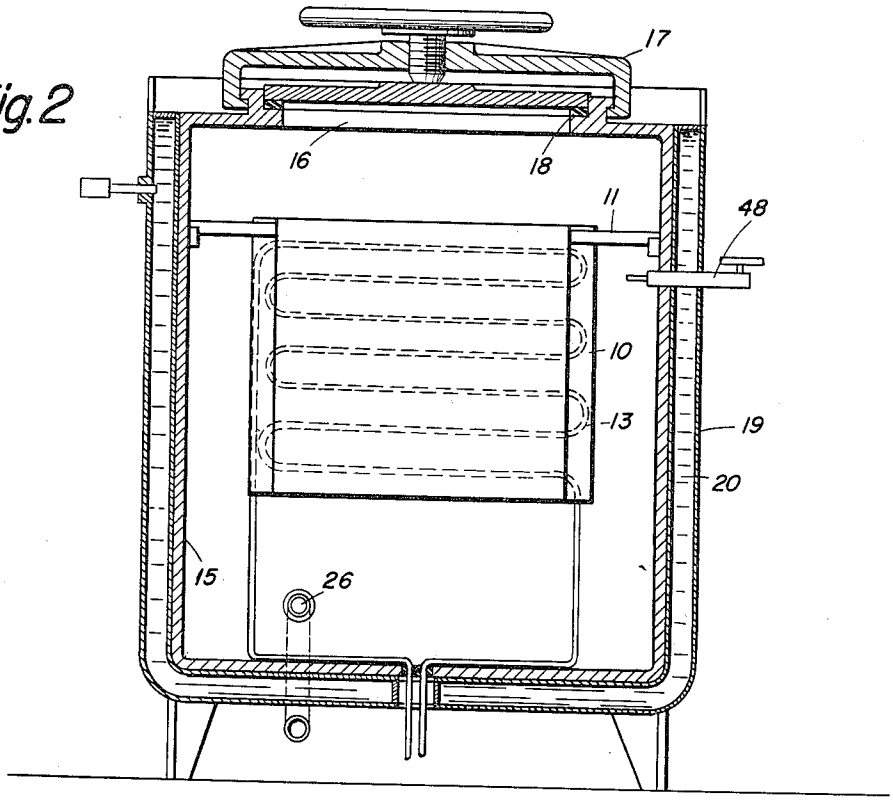

Fig. 3

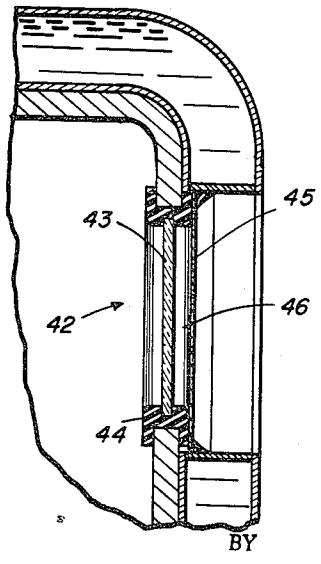

INVENTORS
OLIVER F. DAVIS
HANS G. BELITZ
BY
Taubman & Taubman
ATTORNEYS

United States Patent Office 2,728,321
Patented Dec. 27, 1955

2,728,321

APPARATUS FOR GAS PLATING

Oliver F. Davis, Troy, and Hans G. Belitz, Dayton, Ohio, assignors to The Commonwealth Engineering Company of Ohio, Dayton, Ohio, a corporation of Ohio

Original application July 14, 1949, Serial No. 104,754. Divided and this application October 8, 1952, Serial No. 313,738

1 Claim. (Cl. 118—49)

This invention relates to the art of deposition of metals. More particularly it relates to coating of metal bases. Still more particularly it relates to the plating of objects by the deposition of metal from readily decomposed volatile metal bearing compounds and apparatus for carrying out the process.

Depositing of thin film of metals, such as iron, nickel, cobalt, upon metal bases has been accomplished in the past by enclosing an object to be plated in a chamber sealed against entry of air.

The chamber was purged with carbon dioxide and the object heated to a temperature at which volatile metal carbonyls decompose.

Following this a metal carbonyl gas was carbureted into a stream of carbon dioxide to form a dilute carbonyl medium which was metered into the chamber. Upon coming in contact with the hot metal the carbonyl was decomposed and the metal component deposited.

This application is a division of Serial No. 104,754 of Davis et al., filed July 14, 1949, now U. S. Patent No. 2,619,433.

This process has many disadvantages which limit its usefulness. While the chamber is filled with a mixture of inert gas and metal carbonyl vapors, plating only occurs when the carbonyl vapor contacts the hot object and general decomposition may take place, with the result that powdered metal accumulates in the bottom of the chamber.

Further, the deposition rate is very slow and the process requires hours to build up an appreciable depth of metal coating. In addition, the coatings are brittle and adhered poorly to the base metal.

In another process, utilizing quite similar equipment, the brittleness and poor adhesion has been largely overcome. In this process the metal deposition is carried out in two stages.

After a thin layer of metal is deposited the object is subjected to heat treatment at a temperature of between 500 and 800° F. to expel the occluded gases. The object was then returned to the chamber and a second coating of the desired thickness over the first layer deposited thereon.

This process, while producing adhering metal coatings, is still a time consuming one. It also requires that the plating cycle be interrupted with consequent loss of materials due to purging the equipment to avoid formation of exposives mixtures of carbonyl gases with air.

It is an object of this invention to overcome the limitations and disadvantages of the above described apparatus and processes.

It is another object of this invention to provide an apparatus for gaseous plating processes in which the time for depositing any thickness of coating is markedly shorter than heretofore.

It is another object of this invention to produce thicker adhering coatings than have been produced heretofore.

It is another object of this invention to provide an improved apparatus for carrying out the process wherein

the metal carbonyl is not brought into the reaction zone in a dilute weak plating vapor state.

It is another object to provide an apparatus wherein the gaseous plating process may be operated under either positive or negative pressure conditions.

It is a further object of this invention to provide an apparatus for effecting gaseous plating wherein the decomposition gases are quickly removed from the plating area to eliminate contamination of the deposited metal film.

It is a still further object of this invention to provide an apparatus and process for continuous and rapid deposition of bright metal coatings by directing the decomposable metal material to the metal surface.

It is still a further object of this invention to provide a simplified method and apparatus for depositing metal from a volatile metal compound by continuously decomposing the compound an conducting the gaseous product resultant from the decomposition away from contact with hot metal in order to avoid decontamination and dulling of the bright deposit.

It is still another object of this invention to provide an apparatus for gaseous plating wherein the decomposable material is not brought up to a decomposition temperature before it is in the direct plating zone.

Other and more specific objects and advantages will be apparent to one skilled in the art as the following description proceeds:

In this new apparatus provision is made whereby the plating composition is introduced into the deposition chamber as a liquid instead of a gas. In this way it is possible to concentrate the stream of metal bearing material at the heated surface.

The atomsphere in the neighborhood of the surface to be coated is thus made up merely of fresh liquid propelled with force by the gas blast into which deposition zone and encountering mainly the hot gaseous decomposition products which are being removed as, for example, by suction or vacuum drawn on the chamber.

This invention makes it possible to utilize metal carbonyls, also nitroxyl compounds, nitrosyl carbonyls, metal hydrides, metal alkyls, metal halides, metal carbonyl halogens, and the like, which are either liquids at normal temperature and pressure conditions, or gases compressible to liquid under any commercial feasible temperature conditions or solids convertible to liquids at temperatures below the decomposition temperature of the compound, or to utilize solutions of carbonyls in volatile solvents such as petroleum ether.

Useful metals which may be deposited from the metallic carbonyl compounds are nickel, iron, chromium, molybdenum, tungsten, cobalt, tellurium, rhenium, and the like.

Illustrative compounds of the other groups are nitroxyls, such as copper nitroxyl, nitrosyl carbonyls, for example, cobalt nitrosyl carbonyl, hydrides, such as tellurium hydride, gelenium hydride, antimony hydride, tin hydride, chromium hydride, the mixed organo metallo hydrides such as dimethyl alumino hydride, metal alkyls such as tetraethyl, lead, metal halides such as rhodium carbonyl chloride, osmium carbonyl bromide, rhuthenium carbonyl chloride, and the like.

When introducing the liquid products into the closed chamber, the liquid is broken up into a fine spray by a blast of inert gas. Apparatus of this type usually delivers the liquid to the orifice through a central pipe.

The inert gas is usually fed to the mixing point through an annular chamber surrounding the central pipe. The quantity of liquid atomized is controlled by adjustment of the orifice area. Commercial equipment, such as fog nozzles or fine spray nozzles, such as the DeVilbis paint spray gun, can be readily adapted for use as the spraying means.

Carbon dioxide, helium, nitrogen, hydrogen, the gaseous product of controlled burning of hydrocarbon gases free of oxygen, mixtures of these gases, and the like, have been utilized as the gas blast.

We prefer to utilize gas held under pressure of between 30 and 90 pounds per square inch for blasting, but the pressure range is subject to much wider variation, depending upon the quantity of liquid being sprayed, the throw required from the nozzle to the plating surface, and so forth.

The throw distance between nozzle and plating surface is somewhat critical in order to convert the liquid to a gas at a point in close proximity to the plating surface. What this distance may be is readily determinable for any particular combination of liquid, temperature of the blasting gas and temperature of the plating object, fineness of the spray, and so forth. However, in view of the many ways in which the conditions may be varied, it will be seen that an exact number of inches would only apply to specific conditions, and that the critical thing really is that the liquid not impinge on the plating surface as a strong liquid spray.

Each material from which a metal may be plated has a temperature at which decompositions is complete. However, decomposition may take place slowly at a lower temperature or while the vapors are being raised in temperature through some particular range. For example, nickel carbonyl completely decomposes at a temperature in the range of 375° F. to 400° F. However, nickel carbonyl starts to decompose slowly at about 175° F., and therefore, decomposition continues during the time of heating from 200° F. to 380° F. A large number of the metal carbonyls and hydrides may be effectively and efficiently decomposed at a temperature in the range of 350° F. to 450° F. When working with most carbonyls we prefer to operate in a temperature range of 375° F. to 425° F.

It will be seen thus that the present invention is markedly superior to the processes utilized heretofore, because it accomplishes all of its decomposition quickly in close proximity to the heated surface area and because the liquid when converted to a vapor is then decomposed without delay as the carbonyl or nitrosyl or hydride compounds come in contact with the hot object to be plated.

Maintenance of the metal objects at temperatures in the general operating range is easily accomplished with numerous heating means, such as radiant heating, electrical resistance heating, induction, and the like.

The material to be decomposed is readily brought to the decomposition temperature by atomizing the liquid with hot inert gas. The fine spray of liquid can thus be transformed from say 100 F. to temperatures of between 200° F. and 300° F. in a fraction of a second and the liquid converted to a gas.

This transformation to a gas takes place in the vicinity of the hot object to be plated, giving the process excellent integration for obtaining efficient operation.

Preparatory to coating base material the metal strip or object to be plated may be cleaned by employing the conventional methods used in the art, comprising electrochemically cleaning by moving the same through a bath of alkali or acid electrolyte, wherein the strip is made to cathode or anode.

Pickling of the metal with hydrochloric, sulfuric, or nitric acid, or a combination of acids, may also be made as a part of the cleaning process and the strip thoroughly rised or washed and dried prior to introduction into the plating apparatus of this invention.

The apparatus of the invention and its use will be more readily understood from a description of the process with reference to the apparatus and the specific examples.

In the drawings:

Figure 1 is a vertical sectional view showing diagrammatically one embodiment of the apparatus of this invention;

Figure 2 is a vertical section view of the apparatus taken substantially on the line **2—2** of Figure 1 and looking in the direction of the arrows; and

Figure 3 is a vertical sectional view along the line **3—3** of Figure 1.

Referring to the drawings in detail, there is shown an object **10** which may be a stationary positioned object or a moving sheet or the like. The object here shown is illustrated as stationary and suspended from a support **11**. Adjacent the object is a support **12** from which is suspended suitable heating means **13**, such as an electrical resistance coil masked with a suitable covering **14** which prevents plating on the heating element.

Supports **11** and **12** are secured in the wall of an air tight chamber **15**. This chamber is provided with an aperture **16** for introduction and removal of objects to be plated. The aperture **16** is fitted with releasable closure means **17** rendered air tight by a suitable gasket **18**.

Surrounding the chamber **15** is a metal jacket **19** having therein a closed space **20** through which a suitable medium, such as water, may be circulated. The space **20** is shown in communication with an inlet **21** and an outlet **22**.

If pressure above atmospheric pressure is to be maintained in the chamber **15**, an inert gas may be introduced by suitable means **25**, such as a fan or blower.

Blower **25** is shown taking suction on a surge tank supplied with gas from a storage tank as indicated and introducing the gas at the chamber inlet **27**.

If pressures below atmospheric are to be maintained the chamber outlet pipe **26***a* communicating with the chamber through outlet **26** may be connected at the point indicated at **26***b* with a vacuum pump or exhaust fan. The exhausted gases which are a mixture of inert gas and carbon monoxide may, if desired, be scrubbed to remove inert gas such as carbon-dioxide, and the purified carbon monoxide returned to a metal carbonyl generator to conserve carbon monoxide.

Liquid is introduced into the chamber through the rightwardly wall **28** of chamber **15** by suitable spray means **30**. Spray means **30** consists of a central liquid tube **31** connected to a source of liquid **32**.

The tube **31** is surrounded by a tube **33** mounted with a laterally adjustable head **34**, adapted with an external gear **35**. Gear **35** is actuated by a gear **36** attached to a rod **37** which extends through a sealed bushing **38** to a manually operable position outside the chamber **15**.

Tube **33** is connected to a suitable source of inert gas **39** through pipe **40**. Chamber **15** is provided with a suitable window **42** more completely shown in Figure 3. This window comprises an inner pane **43** of glass or clear resin joined in air tight seal to the chamber **15** by suitable gasket means **44**. The gasketing also seals tightly to an outer glass pane **45** to form between said panes an air pocket **46**.

This arrangement provides a clear view of the plating and spray adjustment apparatus without danger of carbon-monoxide leakage to the area where operators might be stationed.

In Figure 2 there is also shown a thermometer **48** suitably sealed in the wall of chamber **15** and the jacket **19** and extending outside the plating chamber for visual observation.

Conditions of operation of the apparatus in carrying out the process during specific plating operations will be more readily understood from the following examples:

Example I

Aluminum discs may be suspended from the support **11**. The chamber may then be sealed and purged of air by passing carbon dioxide gas therethrough. When the chamber **15** is purged the discs may be heated by conduction due to intimate contact with resistance heater

13. At this time the water may be started circulating in jacket 19 to maintain the chamber at a cool non-plating temperature.

When the thermometer 48 records temperature in the vicinity of the discs at approximately 390° F., nickel carbonyl may be introduced into the chamber by spray means 30. This nickel carbonyl may be under a pressure of about 50 pounds per square inch and sprayed at the rate of about 2 pounds of nickel carbonyl per minute.

The spraying means may be carbon dioxide maintained under pressure of about 75 pounds per square inch. The decomposition of nickel carbonyl produces 4 volumes of carbon monoxide gas for each molecular weight of liquid introduced. The gases may be removed by an exhaust fan which maintains a pressure in the chamber of between 1 and 2 inches of H_2O vacuum.

Under these conditions small discs may be plated to a thickness of many hundredths of an inch in a matter of seconds with a smooth coating.

Example II

A lead pattern may be introduced into the apparatus of Example I in place of the aluminum disc.

The operation may be carried out in a similar manner, using nicke' carbonyl sprayed into the chamber at a rate of about 2½ pounds of liquid per minute.

In this operation the inert atmosphere may be hydrogen gas. The liquid may be sprayed using hydrogen as the blasting gas, which gas is under a pressure of 90 pounds per square inch and at a temperature of 200° F.

The lead pattern may be heated to a temperature of approximately 375° F. and in the presence of hydrogen the nickel carbonyl plated to a bright metallic clean surface.

Example III

A carbon steel plate AISI^c–1020 may be introduced into the chamber of Example I and the process run under the following conditions:

The liquid supplied to the spray apparatus may be cobalt carbonyl. The inert gas circulated in the chamber may be nitrogen from a source maintained under a pressure slightly above atmospheric.

Temperature of the steel plate may be maintained at approximately 410° F. The cobalt carbonyl may be introduced at a liquid flow rate of approximately 4 pounds of carbonyl per minute.

In order to remove the decomposition products and the circulating nitrogen, the gases are exhausted utilizing vacuum equipment capable of maintaining a pressure within the chamber of approximately 3 inches of water vacuum.

A smooth coating of cobalt may be thus deposited on large plates in a matter of minutes.

Example IV

Copper discs may be introduced into the chamber explained in conjunction with Example I and the process operated under the following conditions:

Copper discs may be heated to approximately 380° F. The chamber may be purged with hydrogen, and hydrogen gas may be used as the spraying medium. Antimony hydride may be introduced into the chamber through the spray apparatus at a rate of approximately 3 pounds per minute. These copper discs of 3 inch diameter may be plated to a depth of .025 inch with metallic antimony in a fraction of a minute.

It will be understood that while there have been given herein certain specific examples of the apparatus and method of this invention, it is not intended thereby to have this invention limited to or circumscribed by the specific details herein specified, in view of the fact that the apparatus of this invention may be modified according to individual preference or conditions without necessarily departing from the spirit of this disclosure and the scope of the appended claim.

We claim:

Apparatus for plating objects by gaseous metal deposition, said apparatus comprising an airtight chamber, a liquid atomizing means disposed in said chamber, said means including a nozzle comprising a tubular member through which liquid to be atomized is introduced into said chamber, said tubular member being surrounded by an outer end for discharging gas to propel a fine spray of liquid metal carbonyl into said chamber, means for supporting materials in said chamber and spaced from said nozzle for positioning material to be plated, means for heating said material which is arranged adjacent said material support and remote from said nozzle, an inlet to said chamber for introducing inert gas and disposed at one end thereof, an outlet from said chamber for removing inert gas and decomposition products from the chamber disposed at the opposite end thereof, and blower means connected with said inlet for circulating inert gas through said chamber and at a pressure above atmospheric.

References Cited in the file of this patent

UNITED STATES PATENTS

2,332,309	Drummond	Oct. 19, 1943
2,453,141	Lange	Nov. 9, 1948
2,508,509	Germer et al.	May 23, 1950
2,522,531	Mochel	Sept. 19, 1950
2,576,289	Fink	Nov. 27, 1951
2,602,033	Lander	July 1, 1952
2,619,433	Davis et al.	Nov. 25, 1952
2,649,754	Davis et al.	Aug. 25, 1953