Aug. 12, 1930. A. HERZ 1,772,604

ELECTRIC DOOR RELEASE

Filed Feb. 21, 1925

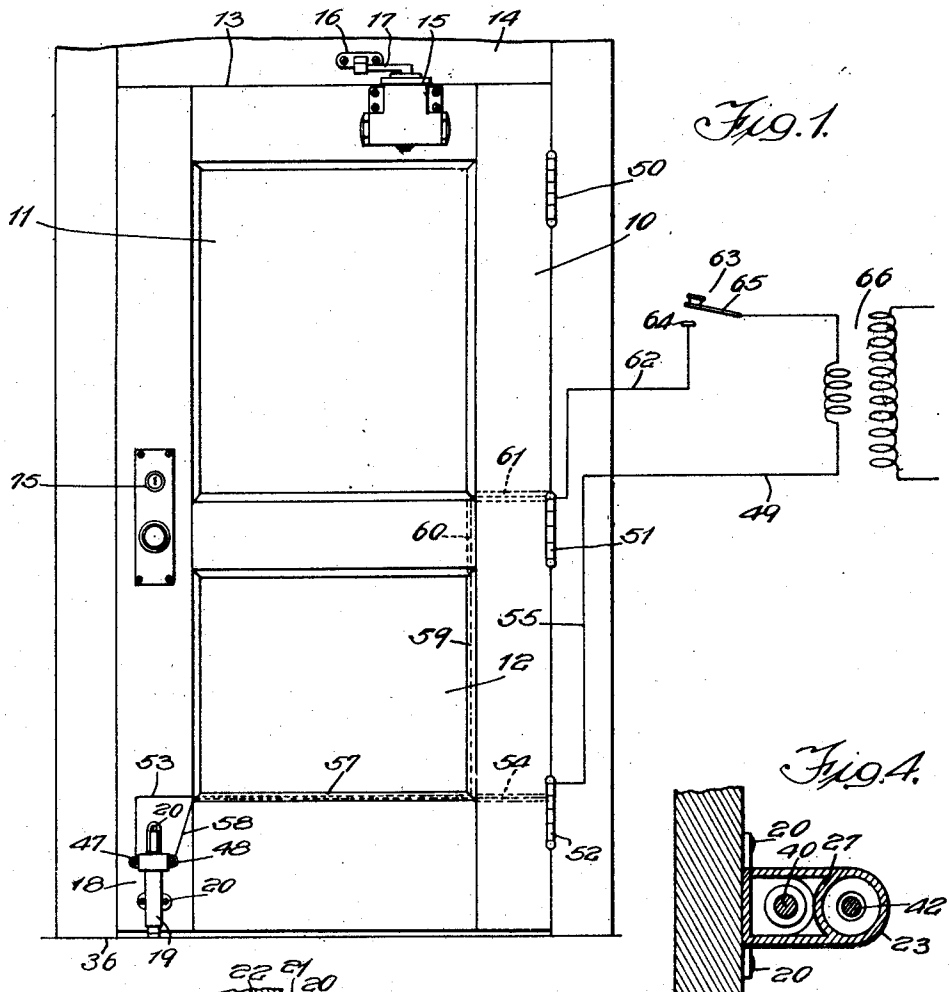

Fig. 1.

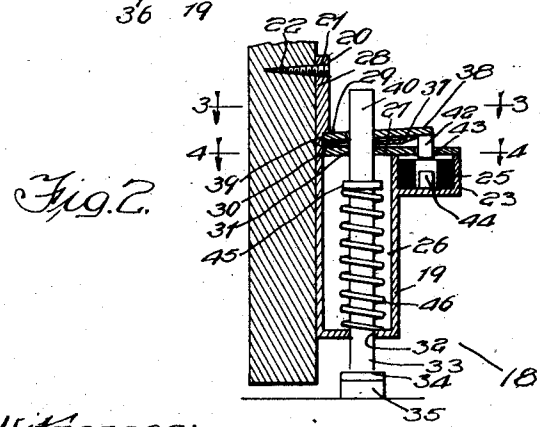

Fig. 2.

Fig. 4.

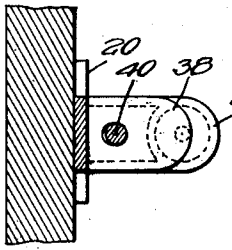

Fig. 3.

Witnesses:
William R. Kilroy
Harry R. White.

Inventor:
Alfred Herz
Brown, Boettcher & Dinner
By
Attys.

Patented Aug. 12, 1930 1,772,604

UNITED STATES PATENT OFFICE

ALFRED HERZ, OF CHICAGO, ILLINOIS

ELECTRIC DOOR RELEASE

Application filed February 21, 1925. Serial No. 10,981.

This invention in general relates to mechanism for closing doors, and more particularly to an arrangement for effecting the disengagement of a door stop from the floor to permit the door check to became effective and close the door.

It is customary nowadays to maintain the door of private offices and similar places open through the medium of a door stop. Executives and other individuals who occupy private offices have found it advantageous to keep the office door open so as, in addition to providing proper ventilation, to permit persons to enter and leave the office without having to open and shut the door, thereby eliminating noise and other disturbances which might distract the attention of the occupant of the office.

Frequently the occupant of an office desires privacy. For an example, some individual might come into the office to see him and, due to the particular nature of the matter under discussion, secrecy is desired. Heretofore, in order to close the door, it was necessary that the occupant of the office either do it himself or summon someone else, such as his secretary, to do so. In order to summon the secretary, he might press a button operating an annunciator visible to his secretary. When the secretary comes into the office, he has to tell her what to do. This, as is readily apparent, occupies and requires the time and attention of both the occupant of the office and the secretary. Not only does it distract the attention of the person in the office, but it causes the occupant of the office, as well as the secretary, considerable inconvenience and unnecessary work.

Now, I propose to eliminate the necessity for either the occupant closing the door himself or summoning someone else to do it, by providing an arrangement including an electrical circuit controlled by a button on the desk of the person in the office for disengaging the door stop from the floor and thereby making the door check effective to close the door.

I am aware that the broad idea of employing mechanism to open and close a door or the like, is old, but it is not my intention to claim this idea broadly. According to my invention, a very simple and effective apparatus is used which permits the door to be opened and held in any desired position as well as to be released from that position.

A mechanism built in accordance with the present invention also has the additional advantage of having a greater degree of adaptability to the usual type door than any of the heretofore types of door closing apparatus. The present mechanism can be installed in the average door with a minimum amount of change and deviation from standard equipment and hence with a minimum amount of expense.

The object of the present invention is to provide an arrangement including an electrical circuit for disengaging a door stop from the floor, thereby making the door check effective so as to close the door.

In accordance with the general features of the invention, there is provided a door check of any usual type, a door stop, and an arrangement or mechanism including an electrical circuit for disengaging the door stop from the floor thereby bringing the door check into operation to close the door.

Other objects and advantages of the present invention will more fully appear from the following detailed description, taken in connection with the accompanying drawings which illustrate one embodiment thereof, and in which

Figure 1 is a diagrammatic view embodied with the features of the present invention;

Fig. 2 is a vertical sectional view of the door check attached to the lower corner of a door taken at right angles to the plane of the paper;

Fig. 3 is a horizontal sectional view taken on the line 3—3 of Fig. 2; and

Fig. 4 is a horizontal sectional view taken on the line 4—4 of Fig. 2.

Referring now to the drawings in detail, in which like reference numerals designate similar parts throughout the several views, 10 denotes a door which may be of any suitable construction or type. The door 10 illustrated in Fig. 1, is of the panel type and is provided with two panels 11 and 12, which

reduce considerably the weight of the door. The door 10 fits snugly in an opening 13 in a wall 14. Mounted upon the upper part of the door in any suitable manner, is a door check hereinafter referred to generally by reference numeral 15. The door check 15 is connected to the wall at 16 through the medium of the customary leverage mechanism 17. The door check 15, as is well known in the art, not only prevents the door 10 from being slammed shut, but also, through a resilient medium inside of the door check, causes the door to gradually be drawn to thereby minimizing the noise resulting from closing the door.

Mounted on the lower corner of the door 10, is a usual type door stop, hereinafter referred to generally by reference character 18, slightly modified to embody some of the features of the present invention.

The door check 18 comprises a casing 19 provided with two lugs 20 and a projection 28 (Fig. 1), each being equipped with a small circular opening 21. The door check 18 is fastened to the door by three screws 22 threaded through the openings 21 into the door 10. The casing 19 is preferably of a cylindrical form in its lower portion and at its upper portion is provided with a lateral projection 23 in which is supported and housed a solenoid 25. The portion 23 may be integral with the main housing 19 or it may be fastened thereto in any suitable or desirable manner. The housing 19 is provided with a cylindrical bore 26. Both the housing 19 and the portion 23, which is shown integral to the said housing, are open at the top. A wall 27 of arcuate contour (Fig. 4) separates the solenoid or electromagnetic coil 25 from the bore 26. This arcuate portion is integral with both the housing 19 and the portion 23. The upper portion designated by reference numeral 28 of the housing 19, is preferably thicker than the walls of the housing, in order to form a shoulder 29. A cover 30 is mounted over the bore 26 and the portion 23 and is positioned below the shoulder 29. The cover 30 may be fastened in any suitable manner to the housing 19.

The cover 30 is provided with a circular opening 31 and the lower part of the housing 19 is provided with a circular opening 32, both openings being in alignment. Passing upwardly through the housing 19 through both openings 31 and 32, is a rod 33 which may be termed a plunger rod. The lower end 34 of the rod 33 is enlarged, and secured thereto is a circular rubber member 35 for engaging the floor, hereinafter referred to generally by reference numeral 36. Positioned on top of the cover 30 is a leaf spring 37 and a trigger 38 which fit in a slot 39 formed by the wall of the housing 19 and the shoulder 29. The trigger 38 at one end engages the shoulder 29 of the portion 28. The upper portion of the rod 33 passes through an opening 40 in the leaf spring 37 and through an opening 41 in the trigger 38. The opening 41 in the trigger 38 is preferably a little larger in diameter than the diameter of the rod 33. The leaf spring 37 is adapted to at all times urge the trigger upwardly. The spring 37 and the trigger 38 may, if desired, be pinned to the housing 19 in any suitable manner, although it should be understood that this is not necessary, in view of the fact that the rod 33 will tend to hold both of them in position immediately under the shoulder 29 of the portion 28 in the slot 39. That is to say, neither the trigger nor the associated leaf spring can be removed without first withdrawing the plunger rod 33 therefrom.

The outer end of the trigger is provided with an iron core or tip 42, which extends through an opening 43 in the cover 30. The solenoid 25 is equipped with a magnetic element 44 which may be of the same diameter as that of the tip 40 and is preferably in alignment with the tip so as to draw the said tip downwardly whenever it is energized by the said solenoid.

The rod 33 is equipped with a shoulder 45, located inside of the bore 26. Surrounding the rod 33 intermediate the shoulder 45 and the lower part of the housing 19, is a compression spring 46 which, at all times, tends to urge the rod 33 upwardly. Projecting through the sides of the portion 23 of the housing 19 are a pair of terminals 47 and 48 to which are connected the leads of the solenoid 25.

The door 10 is connected to the wall 14 by three suitable hinges 50, 51 and 52. The terminal 47 (Fig. 1) is connected by a lead 53 of a circuit hereinafter referred to generally by reference character 49 through an aperture 54 in the door to the hinge 52. The lead 53 passes along the lower edge of the panel 12 under the molding strip 57 to the aperture 54. The hinge 52 is connected by a lead 55 to one side of a transformer 66. The terminal 48 is connected by a lead 58 to the hinge 51. The lead 58 passes along the lower edge of the panel 12 under the molding strip 57 and at the point where the lead 53 enters the aperture 54 the lead 58 is bent upwardly under the molding strip 59, through apertures 60 and 61, positioned preferably at right angles, to each other to the hinge 51. The hinge 51 is connected by a lead 62 to the contact element 64 of a switch 63. The switch 63 is connected through a flexible element or member 65 to the opposite side of the transformer 66.

This construction of connecting the leads of the circuit 49 to the hinges 51 and 52 enables very little of the leads comprising the circuit 49 to be exposed on the door 10 and to also permit the door to be opened and closed freely without any chance of the

leads becoming broken. Furthermore, even though the hinges 51 and 52 constitute part of the circuit 49, the voltage of the electric current passing therethrough being small, would not be sufficient to injure any one or cause serious leakage. The transformer 66 may be of any suitable or desirable type preferably, it is, of the bell ringing type, which reduces the voltage for example from 110 volts down to 6 volts. While I have shown a source of alternating current for operating the solenoid 25 it is to be understood that a source of direct current may be provided instead. It is customary to provide office buildings with a suitable source of low voltage direct or alternating current. The switch or push button 63, although described as being composed of only two elements, may be of any other suitable construction.

The operation of the mechanism is as follows:

The door 10 may be opened to any desired position and retained therein by the stop 18 which is operated in the usual manner. That is to say the plunger 33 is pushed downwardly by pressing on it with your foot bringing the rubber cap 35 into frictional engagement with the floor 36; the spring 46 being compressed between the shoulder 45 and the bottom of the casing 19 by the downward motion of the plunger.

The plunger 33 is prevented from being forced upwardly under the action of the compressed spring 46 by the trigger 38 which is urged upwardly by the leaf spring 37 bringing that portion of the wall of the trigger 38, around the opening 41 and the plunger therein, into frictional engagement with the surface of the rod 33. Due to incline of the trigger when in its uppermost position the pressure exerted by the compressed spring 46 tends to force the rod 33 into tighter frictional contact therewith. Thus the rod 33 is prevented from being snapped back to its normal position once your foot is removed from it.

Obviously, the further the door 10 is opened the further the leverage mechanism 17 will be extended from the wall 14.

Now, upon the operation of the button or switch 63, which may be located on one side of a desk, table, or the like, in the office of an executive if desired, the circuit 49 will be closed. This results in the electromagnetic coil or solenoid 25 being energized and through the magnetic element 44 the member 42 is attracted and the trigger 38 is drawn downwardly against the urging tendency of the leaf spring 37. Thereupon the compressed spring 46 expands, forcing the rod 33 upwardly into its uppermost position, and out of engagement with the floor 36.

Now the check 15 is free to function in its usual way causing the door 10 to be gradually drawn into its closed position. If desired, locking mechanism 75 may be provided for causing the door to be locked automatically upon being drawn into its closed position.

Upon the button or the switch 63 being operated to break the circuit 49, the leaf spring 37 will force the trigger 38 into its uppermost position again. After the door has been opened the plunger 33 may be forced down in the same manner as already described to cause the door to be maintained in any open position desired.

It is to be understood that the invention is not to be limited by the above detailed description, but only by the scope and spirit of the appended claims.

I claim:—

1. The combination, with a door and a door casing, comprising vertically aligned hinges on said casing onto which the door is secured and arranged to swing into any of a plurality of positions, closing means carried by the door and operatively attached to the casing, a stop carried by the door arranged to hold the door in any desired angular position, a releasing electro-magnet for said stop, terminals for said magnet, conductors secured to said terminals and passing through recesses in the door to said hinges, conductors on the other side of said hinges secured thereto and leading to a remote control means comprising a source of energy and a switch for closing an electric circuit through said conductors for actuating said electromagnet and releasing said stop.

2. The combination, with a door and door casing, comprising vertically aligned hinges on said casing onto which the door is secured and arranged to swing into any of a plurality of angular positions, closing means carried by the door and operatively secured to the casing, a stop carried by the door arranged to hold the door in any desired angular position, said stop comprising a plunger arranged to be pushed into engagement with the floor, trigger means for holding the plunger in engagement with the floor, a releasing electro-magnet for said trigger, for rendering said trigger ineffective, causing the plunger to disengage from the floor, terminals for said magnet, conductors secured to said terminals and passing through recesses in the door to said hinges, conductors on the other side of said hinges secured thereto and leading to a remote control means comprising a source of energy and a switch for closing a circuit through said conductor and said source for actuating said electro-magnet and releasing said stop from the floor.

3. The combination, with a door and door casing, comprising vertically aligned hinges on said casing onto which the door is secured and arranged to swing into any of a plurality of angular positions, closing means carried by the door and operatively attached to the casing, a stop mechanism carried by the door

arranged to hold the door in any desired angular position, said stop comprising a plunger arranged to be pushed into engagement with the floor, trigger means for holding the plunger in engagement with the floor, a releasing electro-magnet for said trigger, for rendering said trigger ineffective and causing the plunger to disengage from the floor, said electro-magnet comprising a solenoid and a core, a portion of said core being secured to the outer end of said trigger, terminals for said magnet, conductors secured to said terminals and passing through recesses in the door to said hinges, conductors on the other side of said hinges secured thereto and leading to a remote control means comprising a source of energy, and a switch for closing a circuit through said source and said conductors for actuating said electro-magnet and releasing said plunger.

4. The combination, with a door and door casing, comprising vertically aligned hinges on said casing on which said door is secured and arranged to be swung thru an angle to any desired adjusted position, a stop mechanism for said door secured thereto and carried by the door for locking said door in any of said positions, said stop comprising a plunger arranged to engage the floor, a spring-held trigger arranged to hold said plunger in engagement with the floor, a coil spring surrounding said plunger for removing said plunger from the floor when released, an electro-magnet for operating said trigger, said magnet comprising a solenoid and a core, a portion of the core being secured to said trigger, terminals on said solenoid, electric conductors secured by said terminals and passing through recesses in the door to said hinges, conductors secured to the other side of said hinges and leading to a remote control means comprising a source of energy and a switch for completing a circuit through said solenoid and said source, for releasing said door stop when said switch is closed.

5. The combination, with a door casing and a door arranged to fit therein and swing on a vertical axis through an angle to any desired adjusted position, a stop mechanism for said door secured thereto and carried by the door for locking said door in any of said positions, said stop comprising a plunger arranged to engage the floor, a spring-held trigger arranged to hold said plunger in engagement with the floor, a coil spring surrounding said plunger for removing said plunger from the floor when released, an electro-magnet for operating said trigger, said magnet comprising a solenoid and a core, a portion of the core being secured to said trigger, terminals on said solenoid, a remote controlled circuit for said solenoid comprising electric conductors secured by said terminals and passing through recesses in the door, conducting means leading from the door to the casing and arranged to hinge on the vertical axis of the door, conductors on said casing leading to a remote control means comprising a source of energy and a switch for completing a circuit through said solenoid and said source, for releasing said door stop when said switch is closed.

In witness whereof, I hereunto subscribe my name this 19th day of February, 1925.

ALFRED HERZ.